pipe portals - i could not find a spec to submitt them under.

HRANEC SHEET METAL INC., ROOF CURBS **Roof Ports** **724-437-2211**

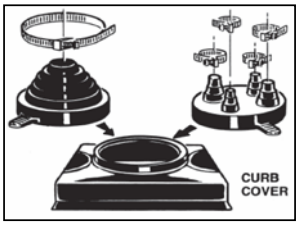

Standard Construction

- 18 GAUGE GALVANIZED
- FULLY WELDED CONSTRUCTION
- 1.5", 3LB. DENSITY INSULATION
- 2" FLANGE OUT
- 2" x 2" WOOD NAILER

*RP-481
4 - 3/8" to 1"

*RP-412
4 - 1" to 2"

*RP-212
2 - 3/8" to 1"
2 - 1" to 2"

*RP-126
1 - 2" to 6"

**N - 182
1 - 8" to 12"

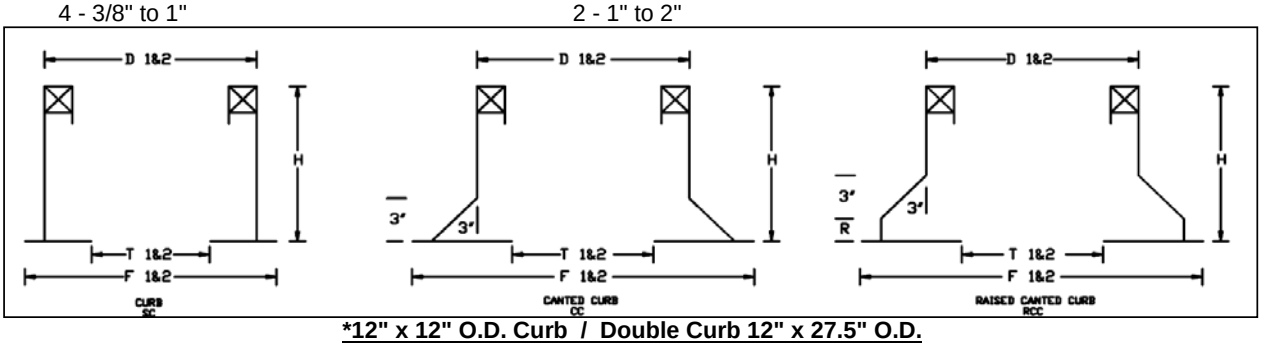

***12" x 12" O.D. Curb / Double Curb 12" x 27.5" O.D.**
****20" x 20" O.D. CURB**

Tag	Cap Model	Curb Type	W (O.D.)	D (O.D.)	H	R	Quantity	Notes
HP-MS-8	RP-212	SC	12	12	18"	-	4	
						-		

Hranec Sheet Metal, Inc.
763 Route 21
Uniontown, PA 15401
Phone: (724) 437-2211
Fax: (724) 437-2233
www.hraneccurbs.com

P.O. Number : _____
Customer: _____
Project: _____
Location: _____
Architect: _____