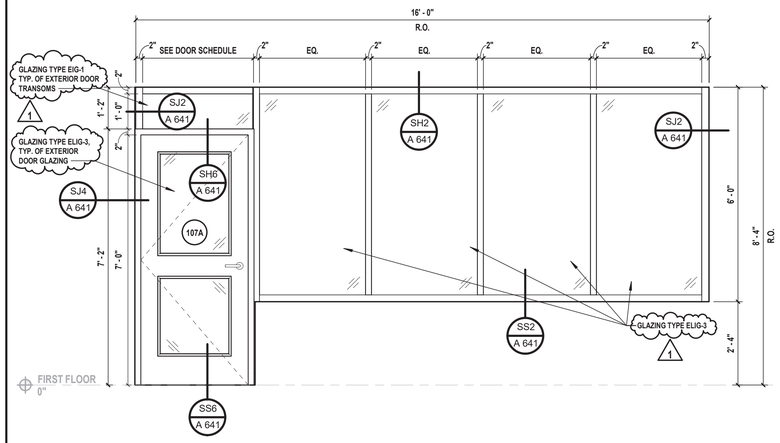

M Storefront Type M

SCALE: 1/2" = 1'-0"

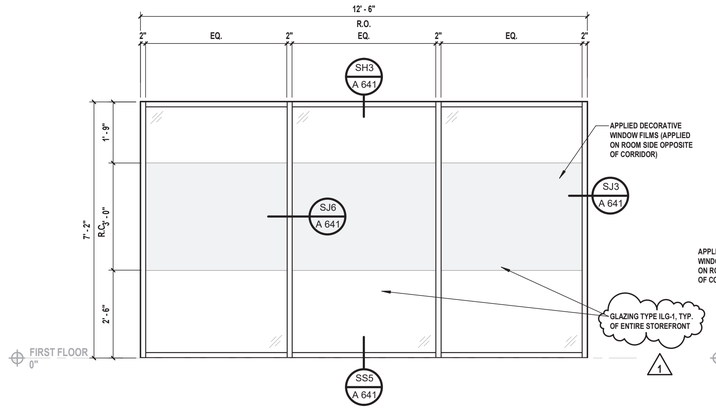

N Storefront Type N

SCALE: 1/2" = 1'-0"

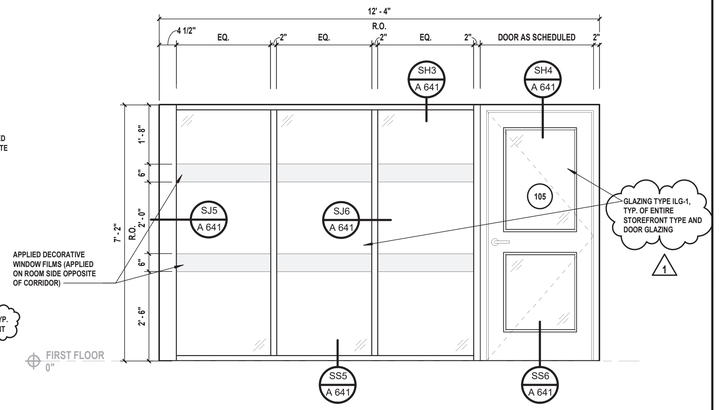

O Storefront Type O

SCALE: 1/2" = 1'-0"

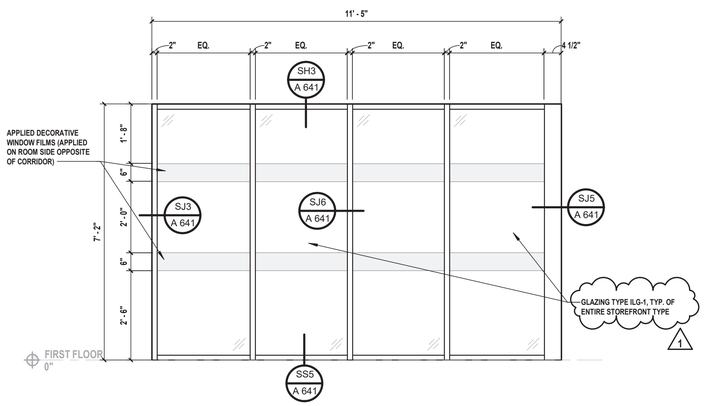

P Storefront Type P

SCALE: 1/2" = 1'-0"

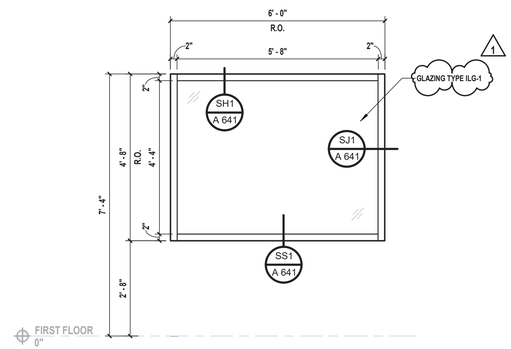

Q Storefront Type Q

SCALE: 1/2" = 1'-0"

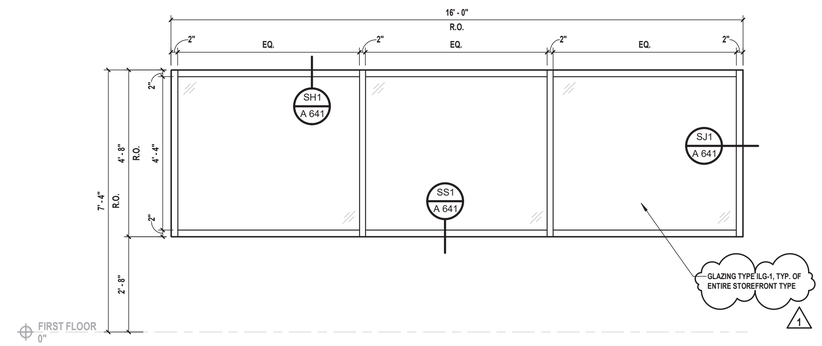

R Storefront Type R

SCALE: 1/2" = 1'-0"

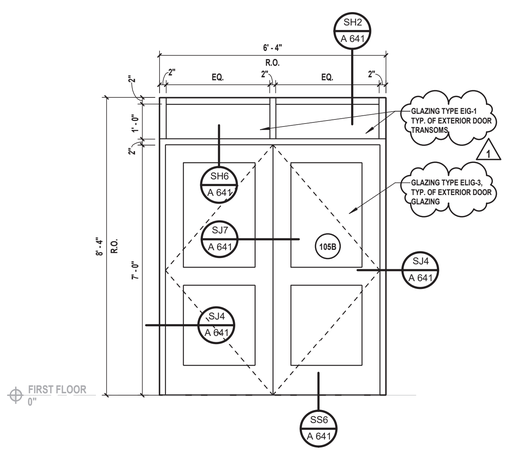

S Storefront Type S

SCALE: 1/2" = 1'-0"

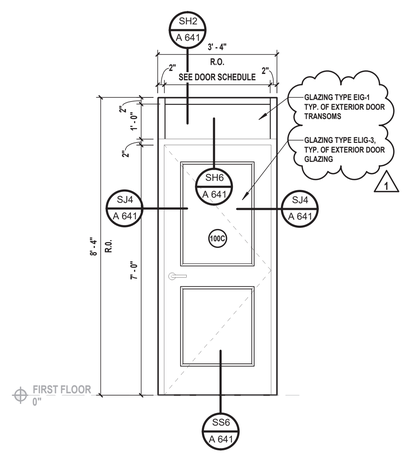

T Storefront Type T

SCALE: 1/2" = 1'-0"

H 2 M architects + engineers

538 Broad Hollow Road, 4th Floor East
Melville, NY 11747
631.756.8000 • www.h2m.com
NY Architecture & Landscape Architecture: No Certificate Required
NY Engineering Certificate of Authorization No.: 0018178

CONSULTANTS:

MARK	DATE	DESCRIPTION
1	03/14/2025	ADDENDUM #1

REGISTERED ARCHITECT PATRICK OTTO STONE 039654 STATE OF NEW YORK

10/31/2025
Exp. Date

PATRICK O. STONE, R.A.
NY PROFESSIONAL ARCHITECT Lic. No. 039654

"IN ACCORDANCE WITH ARTICLE 145, SECTION 7209 OF THE NYS EDUCATION LAW, ALTERATION OF THIS DOCUMENT EXCEPT BY A LICENSED PROFESSIONAL IS ILLEGAL."

DESIGNED BY:	DRAWN BY:	CHECKED BY:	REVIEWED BY:
DBS/RLG	KAP/ANK	DBS	POS

PROJECT No:	DATE:	SCALE:
TRFD 2302	FEBRUARY 2025	AS SHOWN

CLIENT

THIELLS ROSEVILLE FIRE DISTRICT

NEW 26-100 FIRE HEADQUARTERS

THIELLS 26 FD

65 W RAMAPO ROAD
GARNERVILLE, NY 10923

CONTRACT

CONTRACT G
GENERAL CONSTRUCTION

STATUS

FINAL BID DOCUMENT

SHEET TITLE

STOREFRONT TYPES

DRAWING No.

A 640.00

C:\Users\rgnozzle\Documents\TRFD2302_Central23-A_rgnozzle.rvt

3/12/2025 5:51:58 PM