VAILS GATE FIRE DISTRICT

New Storage Building (Phase I)
New Fire Station (Phase II)

BOARD OF FIRE COMMISSIONERS
CHAIRMAN - STEVEN SAGER
COMMISSIONER - PAUL DECKER
COMMISSIONER - SAL GIGANTE
COMMISSIONER - FRANK PIERRI
COMISSIONER - ANTHONY DILORENZO

FIRE COMPANY TRUSTEES
CHAIRMAN - EDWARD KLOUDA
TRUSTEE - MICHAEL FARBENT
TRUSTEE - THOMAS SHOEMAKER
TRUSTEE - DAVID ENGENITO
TRUSTEE - STEVEN CALAMARI

872 Blooming Grove Turnpike
New Windsor, NY 12553

VGFD2001
JULY 2022

ADD ALTERNATE SCHEDULE:

1. ADD ALTERNATE #1: ALL WORK IN PHASE 1: STORAGE BUILDING INCLUDING ASSOCIATED SITE WORK, UTILITY CONNECTIONS AND BUILDING CONSTRUCTION. NOTE: RETENTION POND (AND ASSOCIATED DRAINAGE CONNECTIONS) ARE TO BE INCLUDED IN BASE BID.
2. ADD ALTERNATE #2: PROVIDE FULLY TILED WALLS IN KITCHEN 118, IN LIEU OF FRP PANELS. REFER TO DETAIL 2/A2 420 FOR ADDITIONAL INFORMATION.
3. ADD ALTERNATE #3: PROVIDE PORCELAIN PAVERS IN LIEU OF LUXURY VINYL FLOORING THROUGHOUT MEETING ROOM 116, APPROXIMATELY 2,995 SF.
4. ADD ALTERNATE #4: PROVIDE 4x12 TILE ABOVE 2x8 ACCENT TILE IN LIEU OF PAINT FOR MEN'S TOILET 127, WOMEN'S TOILET 128, AND BATHROOMS 208 AND 209. REFER TO DETAIL 3/A2 410 FOR ADDITIONAL INFORMATION.

LOCATION MAP N.T.S.

H2M architects + engineers
538 Broad Hollow Road, 4th Floor East
Melville, NY 11747
631.756.8000 • www.h2m.com

REGISTERED ARCHITECT ROBERT BEER 032389 STATE OF NEW YORK

DESIGNED BY:	DRAWN BY:	CHECKED BY:	REVIEWED BY:
KEM	JHG		
PROJECT No: VGFD2001	DATE: JULY 2022		SCALE: AS SHOWN

CLIENT
VAILS GATE FIRE DISTRICT

New Storage Building (Phase I)
New Fire Station (Phase II)

872 Blooming Grove Turnpike
New Windsor, NY 12553

STATUS
FINAL BID DOCUMENT

DRAWING No.
G 000.00

C:\Users\jguzman\Documents\VGFD2001_Central21_A_jguzman.rvt

7/18/2022 8:21:31 AM

A1 100.00

- 100.00 — INDICATES REVISION NUMBER
- 100 — INDICATES SHEET TYPE DESIGNATORS (SERIES)
- A1 — INDICATES BUILDING DESIGNATOR - NOTE 1, 2
- A — INDICATES DESCIPLINE DESIGNATOR

NOTES:
1. BUILDING 1 = PHASE 1, NEW STORAGE BUILDING
   BUILDING 2 = PHASE 2, NEW FIRE STATION
2. IF BUILDING NUMBER IS NOT ASSIGNED THE SHEET APPLIES TO ALL BUILDINGS

1 **Understanding Sheet Designators**
SCALE: 3" = 1'-0"

General - Phase 1 & Phase 2

Sheet Number	Sheet Name
G 000.00	COVER SHEET
G 001.00	MASTER SHEET LIST NEW STORAGE BUILDING & NEW FIRE STATION PHASE 1 & PHASE 2
G 002.00	ARCHITECTURE GENERAL NOTES AND LEGENDS PHASE 1 & PHASE 2
G 003.00	ARCHITECTURE GENERAL ACCESSIBILITY REQUIREMENTS PHASE 1 & PHASE 2
G 004.00	ARCHITECTURE GENERAL ACCESSIBILITY REQUIREMENTS PHASE 1 & PHASE 2
G 005.00	ARCHITECTURE GENERAL ACCESSIBILITY REQUIREMENTS PHASE 1 & PHASE 2
G 006.00	ARCHITECTURE GENERAL ACCESSIBILITY REQUIREMENTS PHASE 1 & PHASE 2
G 007.00.	PHASING PLAN

Civil Drawings - Phase 1 & Phase 2

Sheet Number	Sheet Name
V 100.00.	EXISTING CONDITIONS PLAN
CD 100.00.	DEMOLITION SITE PLAN
CS 100.00.	DIMENSIONAL SITE PLAN
C 100.00.	GRADING AND DRAINAGE PLAN
C 110.00.	EROSION AND SEDIMENT CONTROL PLAN
VT 100.00.	VEHICLE TRACKING PLAN
L 100.00.	LANDSCAPING AND LIGHTING PLAN
C 500.00.	SITE DETAILS
C 501.00.	SITE DETAILS
C 502.00.	SITE DETAILS

Structural Drawings - Phase 1

Sheet Number	Sheet Name
S1 100.00.	FOUNDATION, FIRST FLOOR SLAB, & MEZZANINE CONSTRUCTION PLANS
S1 500.00.	STRUCTURAL DETAILS

Architecture Drawings - Phase 1

Sheet Number	Sheet Name
A1 001.00	COVER NEW STORAGE BUILDING PHASE 1
A1 010.00.	ENERGY COMPLIANCE
A1 011.00.	ENERGY COMPLIANCE
A1 012.00.	ENERGY COMPLIANCE
A1 013.00.	ENERGY COMPLIANCE
A1 014.00.	BUILDING CODE ANALYSIS & EGRESS PLAN
A1 100.00.	FIRST FLOOR, ROOF PLAN AND DETAILS
A1 200.00.	EXTERIOR ELEVATIONS
A1 300.00.	BUILDING SECTIONS
A1 430.00.	ENLARGED STAIR PLAN, TOILET PLAN AND SCHEDULE
A1 431.00.	ENLARGED DETAILS
A1 600.00.	SCHEDULES AND PARTITION TYPES

Plumbing Drawings - Phase 1

Sheet Number	Sheet Name
P1 001.00.	PLUMBING GENERAL NOTES AND LEGENDS
P1 002.00.	PLUMBING SCHEDULES
PS1 100.00.	PLUMBING SITE PLAN - NEW STORAGE BUILDING
P1 110.00.	PLUMBING FLOOR PLAN
P1 500.00.	PLUMBING DETAILS
P1 600.00.	PLUMBING RISER DIAGRAMS
P1 501.00.	DIESEL FUEL TANK DETAILS

Mechanical Drawings - Phase 1

Sheet Number	Sheet Name
M1 001.00	MECHANICAL COVER SHEET AND NOTES
M1 100.00	FIRST FLOOR, MEZZANINE, & ROOF MECHANICAL PLANS
M1 510.00	MECHANICAL DETAILS SHEET
M1 610.00	MECHANICAL SCHEDULE SHEET

Electrical Drawings - Phase 1

Sheet Number	Sheet Name
E1 001.00.	ELECTRICAL LEGENDS PHASE 1
E1 100.00.	FIRST FLOOR & MEZZANINE ELECTRICAL LIGHTING AND POWER PLANS PHASE 1
E1 500.00.	STORAGE BUILDING ELECTRICAL DETAILS PHASE 1
E1 501.00.	STORAGE BUILDING ELECTRICAL DETAILS PHASE 1
E1 502.00.	STORAGE BUILDING ELECTRICAL GENERATOR DETAILS PHASE 1
E1 503.00.	STORAGE BUILDING ELECTRICAL GENERATOR DETAILS PHASE 1
E1 600.00.	STORAGE BUILDING ELECTRICAL SINGLE LINE DIAGRAM PHASE 1

Fire Alarm Drawings - Phase 1

Sheet Number	Sheet Name
FA1 001.00.	FIRE ALARM LEGEND PHASE 1
FA1 100.01.	FIRST FLOOR & MEZZANINE FIRE ALARM PLANS PHASE 2

Structural Drawings - Phase 2

Sheet Number	Sheet Name
S2 100.00	STRUCTURAL PARTIAL FOUNDATION PLAN AND DESIGN LOADS
S2 101.00	STRUCTURAL PARTIAL FOUNDATION PLAN - NORTH END
S2 110.00	STRUCTURAL PARTIAL SLAB PLAN - SOUTH END
S2 111.00	STRUCTURAL PARTIAL SLAB PLAN - NORTH END
S2 120.00	STRUCTURAL MEZZANINE FRAMING PLAN - SOUTH END
S2 121.00	STRUCTURAL SECOND FLOOR FRAMING PLAN - NORTH END
S2 123.00	STRUCTURAL PARTIAL LOW & HIGH ROOF FRAMING PLAN - SOUTH END
S2 124.00	STRUCTURAL PARTIAL LOW ROOF FRAMING PLAN - NORTH END
S2 125.00	STRUCTURAL PARTIAL HIGH ROOF FRAMING PLAN - NORTH END
S2 500.00	STRUCTURAL DETAILS
S2 501.00	STRUCTURAL DETAILS
S2 502.00	STRUCTURAL DETAILS
S2 503.00	STRUCTURAL DETAILS
S2 504.00	STRUCTURAL TRUSS DETAILS
S2 600.00	STRUCTURAL COLUMN SCHEDULE AND DETAILS

Architecture Drawings - Phase 2

Sheet Number	Sheet Name
A2 001.00	COVER NEW FIRE STATION PHASE 2
A2 010.00	ARCHITECTURE ENERGY COMPLIANCE NEW FIRE STATION PHASE 2
A2 011.00	ARCHITECTURE ENERGY COMPLIANCE NEW FIRE STATION PHASE 2
A2 012.00	ARCHITECTURE ENERGY COMPLIANCE NEW FIRE STATION PHASE 2
A2 013.00	ARCHITECTURE ENERGY COMPLIANCE NEW FIRE STATION PHASE 2
A2 014.00	ARCHITECTURE ENERGY COMPLIANCE NEW FIRE STATION PHASE 2
A2 015.00	ARCHITECTURE ENERGY COMPLIANCE NEW FIRE STATION PHASE 2
A2 016.00	ARCHITECTURE ENERGY COMPLIANCE NEW FIRE STATION PHASE 2
A2 020.00	ARCHITECTURE FIRST FLOOR EGRESS PLAN NEW FIRE STATION PHASE 2
A2 021.00	ARCHITECTURE SECOND FLOOR EGRESS PLAN NEW FIRE STATION PHASE 2
A2 030.00	ARCHITECTURE PARTITION TYPES, PENETRATION AND CONNECTION DETAILS NEW FIRE STATION PHASE 2
A2 101A.00	ARCHITECTURE PARTIAL FIRST FLOOR PLAN NEW FIRE STATION PHASE 2
A2 101B.00	ARCHITECTURE PARTIAL FIRST FLOOR PLAN NEW FIRE STATION PHASE 2
A2 102A.00	ARCHITECTURE MEZZANINE FLOOR PLAN NEW FIRE STATION PHASE 2
A2 102B.00	ARCHITECTURE SECOND FLOOR PLAN NEW FIRE STATION PHASE 2
A2 120A.00	ARCHITECTURE REFLECTED CEILING PLAN PARTIAL FIRST FLOOR NEW FIRE STATION PHASE 2
A2 120B.00	ARCHITECTURE REFLECTED CEILING PLAN PARTIAL FIRST FLOOR NEW FIRE STATION PHASE 2
A2 121A.00	ARCHITECTURE REFLECTED CEILING PLAN MEZZANINE PLAN NEW FIRE STATION PHASE 2
A2 121B.00	ARCHITECTURE REFLECTED CEILING PLAN PARTIAL SECOND FLOOR NEW FIRE STATION PHASE 2
A2 130A.00	ARCHITECTURE PARTIAL ROOF PLAN NEW FIRE STATION PHASE 2
A2 130B.00	ARCHITECTURE PARTIAL ROOF PLAN NEW FIRE STATION PHASE 2
A2 200.00	ARCHITECTURE EXTERIOR BUILDING ELEVATIONS NEW FIRE STATION PHASE 2
A2 201.00	ARCHITECTURE EXTERIOR BUILDING ELEVATIONS NEW FIRE STATION PHASE 2
A2 300.00	ARCHITECTURE BUILDING SECTIONS NEW FIRE STATION PHASE 2
A2 301.00	ARCHITECTURE BUILDING SECTIONS NEW FIRE STATION PHASE 2
A2 310.00	ARCHITECTURE MASONRY WALL SECTIONS AND DETAILS NEW FIRE STATION PHASE 2
A2 311.00	ARCHITECTURE METAL STUD WALL SECTIONS AND DETAILS NEW FIRE STATION PHASE 2
A2 410.00	ARCHITECTURE ENLARGED TOILET PLANS, ELEVATIONS, NOTES AND DETAILS NEW FIRE STATION PHASE 2
A2 411.00	ARCHITECTURE ENLARGED PLANS, INTERIOR ELEVATIONS, AND DETAILS NEW FIRE STATION PHASE 2
A2 412.00	ARCHITECTURE ENLARGED PLANS AND INTERIOR ELEVATIONS NEW FIRE STATION PHASE 2
A2 420.00	ARCHITECTURE ENLARGED KITCHEN PLAN NEW FIRE STATION PHASE 2
A2 421.00	ARCHITECTURE ENLARGED EXCERCISE & COMPANY KITCHEN, NOTES & DETAILS NEW FIRE STATION PHASE 2
A2 430.00	ARCHITECTURE ENLARGED STAIR PLAN AND DETAILS NEW FIRE STATION PHASE 2
A2 431.00	ARCHITECTURE ENLARGED STAIR PLAN AND DETAILS NEW FIRE STATION PHASE 2
A2 440.00	ARCHITECTURE ENLARGED ELEVATOR PLAN NEW FIRE STATION PHASE 2
A2 470.00	ARCHITECTURE ENLARGED MEZZANINE PLAN, ELEVATION, AND DETAILS NEW FIRE STATION PHASE 2
A2 471.00	ARCHITECTURE MEZZANINE DETAILS AND NOTES NEW FIRE STATION PHASE 2
A2 500.00	ARCHITECTURE WALL TRANSITION AND COLUMN DETAILS NEW FIRE STATION PHASE 2
A2 501.00	ARCHITECTURE WALL TRANSITION AND COLUMN DETAILS NEW FIRE STATION PHASE 2
A2 510.00	ARCHITECTURE WINDOW SCHEDULE, TYPES, DETAILS, AND NOTES NEW FIRE STATION PHASE 2
A2 520.00	ARCHITECTURE DOOR SCHEDULE, DOOR AND FRAME TYPES NEW FIRE STATION PHASE 2
A2 521.00	ARCHITECTURE DOOR DETAILS NEW FIRE STATION PHASE 2
A2 522.00	ARCHITECTURE DOOR DETAILS NEW FIRE STATION PHASE 2
A2 530.00	ARCHITECTURE CEILING AND SOFFIT DETAILS NEW FIRE STATION PHASE 2
A2 540.00	ARCHITECTURE ROOF DETAILS NEW FIRE STATION PHASE 2
A2 541.00	ARCHITECTURE ROOF DETAILS NEW FIRE STATION PHASE 2
A2 542.00	ARCHITECTURE CANOPY DETAILS NEW FIRE STATION PHASE 2
A2 560.00	ARCHITECTURE MILLWORK PLANS, ELEVATIONS AND NOTES NEW FIRE STATION PHASE 2
A2 600.00	ARCHITECTURE FINISH SCHEDULE, NOTES AND DETAILS NEW FIRE STATION PHASE 2
A2 610.00	ARCHITECTURE APPARATUS BAY STRIPING PLAN AND EXTERIOR SIGNAGE NEW FIRE STATION PHASE 2

Fire Protection Drawings - Phase 2

Sheet Number	Sheet Name
FP2 001.00	FIRE PROTECTION GENERAL NOTES, LEGEND, ABBREVIATIONS, AND SCHEDULE
FP2 100A.00	FIRE PROTECTION PARTIAL FIRST FLOOR PLAN NEW FIRE HOUSE PHASE 2
FP2 100B.00	FIRE PROTECTION PARTIAL FIRST FLOOR PLAN NEW FIRE HOUSE PHASE 2
FP2 101A.00	FIRE PROTECTION PARTIAL SECOND FLOOR PLAN NEW FIRE HOUSE PHASE 2
FP2 101B.00	FIRE PROTECTION PARTIAL SECOND FLOOR PLAN NEW FIRE HOUSE PHASE 2
FP2 102A.00	FIRE PROTECTION PARTIAL ATTIC PLAN NEW FIRE HOUSE PHASE 2
FP2 102B.00	FIRE PROTECTION PARTIAL ATTIC PLAN NEW FIRE HOUSE PHASE 2
FP2 500.00	FIRE PROTECTION DETAILS

Plumbing Drawings - Phase 2

Sheet Number	Sheet Name
P2 001.00	PLUMBING NOTES, LEGEND, AND ABBREVIATIONS
P2 002.00	PLUMBING FIXTURE SCHEDULE AND SPECIFICATIONS
P2 003.00	PLUMBING EQUIPMENT SCHEDULE
PS2 100.00	PLUMBING SITE PLAN - MAIN FIRE HOUSE
P2 120A.00	PARTIAL DOMESTIC WATER AND GAS FIRST FLOOR PLAN NEW FIRE HOUSE PHASE 2
P2 120B.00	PARTIAL DOMESTIC WATER AND GAS FIRST FLOOR PLAN NEW FIRE HOUSE PHASE 2
P2 121A.00	PARTIAL DOMESTIC WATER AND GAS SECOND FLOOR PLAN NEW FIRE HOUSE PHASE 2
P2 121B.00	PARTIAL DOMESTIC WATER AND GAS SECOND FLOOR PLAN NEW FIRE HOUSE PHASE 2
P2 130A.00	PARTIAL SANITARY, VENT & STORM UNDERSLAB PLAN NEW FIRE HOUSE PHASE 2
P2 130B.00	PARTIAL SANITARY, VENT & STORM UNDERSLAB PLAN NEW FIRE HOUSE PHASE 2
P2 131A.00	PARTIAL SANITARY, VENT & STORM FIRST FLOOR PLAN NEW FIRE HOUSE PHASE 2
P2 131B.00	PARTIAL SANITARY, VENT & STORM FIRST FLOOR PLAN NEW FIRE HOUSE PHASE 2
P2 132A.00	PARTIAL SANITARY, VENT, & STORM SECOND FLOOR PLAN NEW FIRE HOUSE PHASE 2
P2 132B.00	PARTIAL SANITARY, VENT & STORM SECOND FLOOR PLAN NEW FIRE HOUSE PHASE 2
P2 140A.00	PLUMBING PARTIAL ROOF PLAN NEW FIRE HOUSE PHASE 2
P2 140B.00	PLUMBING PARTIAL ROOF PLAN NEW FIRE HOUSE PHASE 2
P2 500.00	PLUMBING DETAILS
P2 501.00	PLUMBING PLUMBING DETAILS II
P2 600.00	PLUMBING DOMESTIC RISER DIAGRAMS NEW FIRE HOUSE PHASE 2
P2 601.00	PLUMBING SANITARY AND VENT RISER DIAGRAM BUILDING
P2 602.00	GAS AND STORM ISOMETRIC RISER DIAGRAMS NEW FIRE HOUSE PHASE 2

Mechanical Drawings - Phase 2

Sheet Number	Sheet Name
M2 001.00	HVAC LEGENDS, SYMBOLS, ABBREVIATIONS, AND GENERAL NOTES
M2 100A.00	SLAB HVAC PIPING PLAN AREA A
M2 101A.00	FIRST FLOOR HVAC PIPING PLAN AREA A
M2 101B.00	FIRST FLOOR HVAC PIPING PLAN AREA B
M2 102A.00	SECOND FLOOR HVAC PIPING PLAN AREA A
M2 102B.00	SECOND FLOOR HVAC PIPING PLAN AREA B
M2 131A.00	FIRST FLOOR DUCTWORK PLAN AREA A
M2 131B.00	FIRST FLOOR DUCTWORK PLAN AREA B
M2 132A.00	SECOND FLOOR DUCTWORK PLAN AREA A
M2 132B.00	SECOND FLOOR DUCTWORK PLAN AREA B
M2 133A.00	HVAC ROOF PLAN AREA A
M2 133B.00	HVAC ROOF PLAN AREA B
M2 401.00	BOILER ROOM EXPANDED HVAC PIPING PLAN
M2 431.00	BOILER ROOM EXPANDED HVAC EQUIPMENT AND DUCTWORK PLAN
M2 500.00	HVAC DETAILS (1 OF 4)
M2 501.00	HVAC DETAILS (2 OF 4)
M2 502.00	HVAC DETAILS (3 OF 4)
M2 503.00	HVAC DETAILS (4 OF 4)
M2 600.00	HVAC SCHEDULES (1 OF 3)
M2 601.00	HVAC SCHEDULES (2 OF 3)
M2 602.00	HVAC SCHEDULES (3 OF 3)
M2 610.00	HVAC HVAC KITCHEN SCHEDULES (1 OF 10) BUILDING
M2 611.00	HVAC KITCHEN SCHEDULES (2 OF 10)
M2 612.00	HVAC KITCHEN SCHEDULES (3 OF 10)
M2 613.00	HVAC KITCHEN SCHEDULES (4 OF 10)
M2 614.00	HVAC KITCHEN SCHEDULES (5 OF 10)
M2 615.00	HVAC HVAC KITCHEN SCHEDULES (6 OF 10) BUILDING
M2 616.00	HVAC KITCHEN SCHEDULES (7 OF 10)
M2 617.00	HVAC KITCHEN SCHEDULES (8 OF 10)
M2 618.00	HVAC KITCHEN SCHEDULES (9 OF 10)
M2 619.00	HVAC KITCHEN SCHEDULES (10 OF 10)
M2 640.00	HVAC FLOW DIAGRAM (1 of 1)
M2 650.00	HVAC CONTROL DIAGRAM (1 of 1)

Electrical Drawings - Phase 2

Sheet Number	Sheet Name
E2 001.00	ELECTRICAL GENERAL NOTES AND LEGENDSNEW FIRE STATION PHASE 2
ES 100.00	ELECTRICAL SITE PLAN PHASE 2
E2 101A.00	PARTIAL FIRST FLOOR ELECTRICAL POWER PLAN NEW FIRE STATION PHASE 2 PHASE 2
E2 101B.00	PARTIAL FIRST FLOOR ELECTRICAL POWER PLAN NEW FIRE STATION PHASE 2 PHASE 2
E2 102A.00	PARTIAL SECOND / MEZZANINE FLOOR ELECTRICAL POWER PLAN NEW FIRE STATION PHASE 2
E2 102B.00	PARTIAL SECOND FLOOR ELECTRICAL POWER PLAN NEW FIRE STATION PHASE 2
E2 103A.00	PARTIAL ROOF ELECTRICAL POWER PLAN NEW FIRE STATION PHASE 2
E2 103B.00	PARTIAL ROOF ELECTRICAL POWER PLAN NEW FIRE STATION PHASE 2
E2 111A.00	PARTIAL FIRST FLOOR HVAC POWER PLAN NEW FIRE STATION PHASE 2
E2 111B.00	PARTIAL FIRST FLOOR HVAC POWER PLAN NEW FIRE STATION PHASE 2
E2 112A.00	PARTIAL SECOND / MEZZANINE FLOOR HVAC POWER PLAN NEW FIRE STATION PHASE 2
E2 112B.00	PARTIAL SECOND FLOOR HVAC POWER PLAN NEW FIRE STATION PHASE 2
E2 114B.00	ROOF HVAC POWER PLAN NEW FIRE STATION PHASE 2
E2 121A.00	PARTIAL FIRST FLOOR ELECTRICAL LIGHTING PLAN NEW FIRE STATION PHASE 2
E2 121B.00	PARTIAL FIRST FLOOR ELECTRICAL LIGHTING PLAN NEW FIRE STATION PHASE 2
E2 122A.00	PARTIAL SECOND / MEZZANINE FLOOR ELECTRICAL LIGHTING PLAN NEW FIRE STATION PHASE 2
E2 122B.00	PARTIAL SECOND FLOOR ELECTRICAL LIGHTING PLAN NEW FIRE STATION PHASE 2
E2 401.00	ELECTRICAL ENLARGE PLANS NEW FIRE STATION PHASE 2
E2 500.00	ELECTRICAL ELECTRICAL DETAILS BUILDING PHASE 2
E2 501.00	ELECTRICAL DETAILS PHASE 2
E2 502.00	ELECTRICAL GENERATOR DETAILS PHASE 2
E2 503.00	ELECTRICAL GENERATOR DETAILS PHASE 2
E2 600.00	ELECTRICAL SCHEDULES BUILDING PHASE 2
E2 601.00	ELECTRICAL PANEL SCHEDULES NEW FIRE STATION PHASE 2
E2 610.00	ELECTRICAL ELECTRICAL SINGLE LINE DIAGRAM BUILDING PHASE 2

Fire Alarm Drawings - Phase 2

Sheet Number	Sheet Name
FA2 001.00	FIRE ALARM FIRE ALARM LEGENDS AND RISER DIAGRAMS BUILDING PHASE 2
FA2 101A.00	PARTIAL FIRST FLOOR FIRE ALARM PLAN NEW FIRE STATION PHASE 2
FA2 101B.00	PARTIAL FIRST FLOOR FIRE ALARM PLAN NEW FIRE STATION PHASE 2
FA2 102A.00	PARTIAL SECOND / MEZZANINE FLOOR FIRE ALARM PLAN NEW FIRE STATION PHASE 2
FA2 130.00	ROOF FIRE ALARM PLAN NEW FIRE STATION PHASE 2
FA2 102B.00	PARTIAL SECOND FLOOR FIRE ALARM PLAN NEW FIRE STATION PHASE 2
FA2 130.00.	ROOF FIRE ALARM PLAN NEW FIRE STATION PHASE 2 PHASE 2

H2M architects + engineers
538 Broad Hollow Road, 4th Floor East
Melville, NY 11747
631.756.8000 • www.h2m.com

CONSULTANTS:

MARK	DATE	DESCRIPTION

REGISTERED ARCHITECT ROBERT BEE 032389 STATE OF NEW YORK

*ALTERATION OF THIS DOCUMENT EXCEPT BY A LICENSED PROFESSIONAL IS ILLEGAL

DESIGNED BY:	DRAWN BY:	CHECKED BY:	REVIEWED BY:
KEM	JHG		

PROJECT No:	DATE:	SCALE:
VGFD2001	JULY 2022	AS SHOWN

CLIENT
VAILS GATE FIRE DISTRICT

New Storage Building (Phase I)
New Fire Station (Phase II)

872 Blooming Grove Turnpike
New Windsor, NY 12553

CONTRACT
CONTRACT G
GENERAL CONSTRUCTION

STATUS
FINAL BID DOCUMENT

SHEET TITLE
MASTER SHEET LIST
NEW STORAGE BUILDING & NEW FIRE STATION
PHASE 1 & PHASE 2

DRAWING No.
G 001.00

C:\Users\jguzman\Documents\VGFD2001_Central21_A_jguzman.rvt
7/18/2022 8:21:41 AM

GENERAL NOTES

1. THE DRAWING AND SPECIFICATION ARE COMPLEMENTARY. THE PROJECT SPECIFICATION MANUAL CONTAINS THE CONDITIONS OF THE CONTRACT, PROCEDURES AND TECHNICAL SPECIFICATIONS.

2. THE CONTRACTOR WILL CHECK AND VERIFY ALL CONDITIONS AT THE SITE BEFORE STARTING OF WORK AND THEY WILL FAMILIARIZE THEMSELVES WITH THE INTENT OF THESE PLANS AND MAKE SURE WORK AGREES WITH SAME. IF DURING THE CONSTRUCTION A CONDITION IS FOUND WHICH DISAGREES WITH CONDITION INDICATED ON THE PLANS, THE CONTRACTOR WILL STOP WORK AND NOTIFY THE ARCHITECT. SHOULD THEY FAIL TO FOLLOW THIS PROCEDURE AND CONTINUE WITH WORK, THEY WILL ASSUME ALL RESPONSIBILITY AND LIABILITY ARISING FROM THEIR ACTIONS.

3. THE CONTRACTOR SHALL OBTAIN ANY AND ALL PERMITS REQUIRED FOR THE PERFORMANCE OF THE WORK AND THE OWNER SHALL PAY ALL FEES IN CONNECTION WITH THEREOF UNLESS OTHERWISE AGREED UPON.

4. THE DESIGN, PREPARATIONS OF NECESSARY CONSTRUCTION DOCUMENTS AND THE SECURING OF ALL REQUIRED PERMITS AND APPROVALS FROM THE APPROPRIATE ADMINISTRATIVE AUTHORITY SHALL BE COMPLETED PRIOR TO THE COMMENCEMENT OF THE WORK AND SHALL INCLUDE ALL WORK.

5. DO NOT SCALE DRAWINGS. WRITTEN DIMENSIONS CONFIRMED BY FIELD CONDITIONS TAKE PRECEDENCE. IF A DISCREPANCY ARISES BASED ON FIELD CONDITIONS, CONSULT WITH ARCHITECT BEFORE PROCEEDING WITH WORK OR ORDERING MATERIALS.

6. THE CONTRACTOR SHALL NOT MAKE DEVIATIONS FROM THE DESIGN DRAWINGS WITHOUT WRITTEN DIRECTION FROM THE ARCHITECT. REPORT ANY ERRORS, INACCURACIES, MISSING DIMENSIONAL REQUIREMENTS OR CONFLICTS TO THE ARCHITECT/ENGINEER IN WRITING BEFORE BEGINNING ANY WORK.

7. IF THERE IS A DISCREPANCY ON THE CONSTRUCTION DOCUMENTS. THE ARCHITECT SHALL BE NOTIFIED IMMEDIATELY SO THAT THE DISCREPANCIES CAN BE RESOLVED. UNLESS OTHERWISE INDICATED IN WRITING BY ARCHITECT, THE MORE CONSERVATIVE INTERPRETATION OF THE CONSTRUCTION DOCUMENTS SHALL APPLY.

8. VERIFY EXACT LAYOUT CAPABILITY WITH ALL EXISTING CONDITIONS AND COORDINATE ALL WORK TO BE UNDERTAKEN PRIOR TO BEGINNING ANY WORK. NOTIFY THE ARCHITECT IN WRITING BEFORE BEGINNING WORK IF ANY DISCREPANCIES ARE FOUND WITH CONDITIONS ENCOUNTERED. CONTRACTOR WILL BE RESPONSIBLE FOR ALL TEMPORARY MEASURES, TIME LOST, CHANGES TO THE WORK SCOPE WITH ANY ADDITIONAL COMPENSATION IF CONTRACTOR FAILS TO PROVIDE AFOREMENTIONED VERIFICATIONS, NOTIFICATIONS AND COORDINATION PRIOR TO COMMENCING WORK.

9. ALL PENETRATIONS REQUIRED TO ACCOMMODATE ALL WORK DETAILED OR SPECIFIED FOR THE WORK SCOPE SHALL BE LOCATED, SIZED, MADE AND VERIFIED BY THE CONTRACTOR. ALL PENETRATIONS SHALL BE REVIEWED BY THE ARCHITECT.

10. DISTURB ONLY THIS AREAS OF THE SITE AFFECTED BY NEW CONSTRUCTION, UNLESS NOTED OTHERWISE. CONTRACTOR SHALL PROTECT ALL ADJACENT EXISTING CONSTRUCTION, ITEMS, FINISHES, ETC. AND SHALL PATCH, REPAIR AND/OR REPLACE, AND REFINISH AS REQUIRED TO RESTORE ANY AND ALL AREAS DAMAGED DURING CONSTRUCTION.

11. PROTECT ADJOINING PROPERTIES WHEN CONDUCTING WORK.

12. ALL WORK SHALL BE PERFORMED IN STRICT ACCORDANCE WITH THE BUILDING CODE OF NEW YORK STATE AND WITH THE RULES AND REGULATIONS OF ALL LOCAL AGENCIES, DEPARTMENTS OR LAWS HAVING JURISDICTION OVER ANY PORTION OR SPECIFIC PHASE OF THE WORK. THE CONTRACTOR SHALL COORDINATE THE WORK WITH PUBLIC UTILITY COMPANIES HAVING JURISDICTION.

13. ALL WORK WILL BE IN ACCORDANCE WITH CURRENT EDITION AND SUPPLEMENT OF THE NEW YORK STATE FIRE CODE, PLUMBING CODE, INERNATIONAL MECHANICAL CODE, THE INTERNATIONAL ENERGY CONSERVATION CONSTRUCTION CODE AND ALL LOCAL ZONING, BUILDING CODES AND ORDINANCES HAVING JURISDICTION.

14. CONTRACTOR SHALL STRICTLY ADHERE TO MANUFACTURER'S PRINTED INSTRUCTIONS AND SPECIFICATIONS AND WILL GUARANTEE TO THE OWNER THAT ALL MATERIALS AND EQUIPMENT INCORPORATED IN THE WORK WILL BE NEW UNLESS OTHERWISE SPECIFIED.

15. VERIFY ALL CHANGES TO WORK IN WRITING TO THE ARCHITECT AND OWNER BEFORE BEGINNING RELATED CHANGE WORK.

16. DIMENSIONS NOTED AS "EQUAL" OR "EQ" WITHIN A ROOM REFER TO A DISTANCE RELATIONSHIP CONTAINED ONLY IN THAT ROOM AT AN OPPOSING OR PARALLEL WALL UNLESS NOTED OTHERWISE.

17. VERIFY AND ADJUST APPROXIMATE DIMENSIONS (±) IN THE FIELD. VERIFY WITH ARCHITECT PRIOR TO CONSTRUCTION.

18. ALL ITEMS DETAILED OR SPECIFIED TO RUN WITHIN OR ATTACHED TO WALLS AND CEILINGS ARE TO BE CONCEALED OR RECESSED UNLESS NOTED OTHERWISE.

19. ALL SECTIONS AND DETAILS SHALL BE CONSIDERED TYPICAL AND APPLY FOR THE SAME AND SIMILAR CONDITIONS, UNLESS OTHERWISE SPECIFICALLY NOTED.

20. ANY ITEM OF WORK NECESSARY FOR PROPER COMPLETION OF CONSTRUCTION, WHICH IS NOT SPECIFICALLY COVERED ON THE DRAWINGS OR SPECIFICATION SHALL BE CONSIDERED INCLUDED IN THE WORK.

21. THE CONTRACTOR SHALL BE FULLY RESPONSIBLE FOR THE SAFETY OF THE PUBLIC, WORKERS, AND THE PROPERTY DURING CONSTRUCTION OPERATIONS THROUGH TO THE COMPLETION OF ALL WORK.

22. THE CONTRACTOR WILL BE RESPONSIBLE FOR THE ACTS AND OMISSIONS OF ALL THEIR EMPLOYEES AND SUBCONTRACTORS, THEIR AGENTS, AND ALL OTHER PERSONS PERFORMING ANY OF THE WORK UNDER CONTRACT WITH THE CONTRACTOR. THE CONTRACTOR SHALL BE FULLY INSURED WITH LIABILITY AND WORKERS COMPENSATION.

23. THE CONTRACTOR SHALL BE RESPONSIBLE FOR THE ADEQUATELY BRACING AND PROTECTING ALL WORK DURING CONSTRUCTION AGAINST DAMAGE, BREAKAGE, COLLAPSE, DISTORTION AND MISALIGNMENT.

24. CONTRACTOR SHALL NOTIFY ARCHITECT IMMEDIATELY IF THEY CANNOT COMPLY WITH ALL REQUIREMENTS OF THE CONSTRUCTION DOCUMENTS AND THE APPLICABLE CODE HAVING JURISDICTION.

25. THE CONTRACTOR SHALL INDEMNIFY AND HOLD THE ARCHITECT AND HIS AGENTS HARMLESS FROM AND AGAINST ALL LOSS, DAMAGE OR EXPENSE (INCLUDING REASONABLE ATTORNEY FEES) RESULTING FROM ANY CLAIM OF ANY KIND.

26. THE ARCHITECT SHALL NOT BE RESPONSIBLE FOR ANY CHANGES TO THIS PROJECT MADE BY OWNER, GENERAL CONTRACTOR OR ANY SUBCONTRACTOR OR MATERIAL SUPPLIER UNLESS PROPERLY AUTHORIZED, IN WRITING, BY THE ARCHITECT.

27. ALL DRAWINGS, SPECIFICATIONS, AND COPIES SHALL REMAIN THE PROPERTY OF THE ARCHITECT. THEY ARE TO BE USED ONLY WITH RESPECT TO THE WORK OF THIS.

28. THESE DOCUMENTS DO NOT INCLUDE THE NECESSARY COMPONENTS FOR CONSTRUCTION SAFETY. SAFETY, CARE OF ADJACENT PROPERTIES DURING CONSTRUCTION, AND COMPLIANCE WITH STATE AND FEDERAL REGULATIONS REGARDING SAFETY IS, AND SHALL REMAIN, THE CONTRACTORS RESPONSIBILITY.PROJECT AND ARE NOT TO BE USED IN ANY MANNER ON ANY OTHER PROJECT.

29. THE CONTRACTOR SHALL TAKE PRECAUTIONARY MEASURES TO PROTECT THE PREMISES FROM DUST, DEBRIS, DURT OR DAMAGE, DURING AND UNTIL FINAL ACCEPTANCE OF THE PROJECT. ALL ITEMS REMOVED FROM THE PROJECT SITE DURING THE CONSTRUCTION SHALL REMAIN THE PROPERTY OF THE OWNER EXCEPT THE DEBRIS THAT SHALL BE REMOVED FROM THE PROJECT SITE AND LEGALLY DISPOSED OF ON A DAILY BASIS.

30. ALL ITEMS REMOVED FROM THE PROJECT SITE SHALL REMAIN THE PROPERTY OF THE OWNER DEBRIS SHALL BE REMOVED FROM THE PROJECT SITE AND LEGALLY DISPOSED OF ON A DAILY BASIS.

31. THE CONTRACTOR IS RESPONSIBLE FOR THE COORDINATION OF ALL WORK INCLUDING MECHANICAL, ELECTRICAL, PLUMBING AND SPECIALTY TRADES.

SYMBOL LEGEND

OFFICE

10001A / 150 SF	Room Designation	1i	Wall Type
A	Window Elevation Key	0	Column Grid
1001A	Door Number	XX	RevisionTag
12'-0"	Primary Ceiling Tag	1 Title SCALE: 1/8" = 1'-0"	Drawing Title
X 1'-0" A.F.F.	Secondary Ceiling Tag	1 A101	Detail Key
1 A101	Exterior Elevation	1 A101	Section Cut
A A101 A A A	Interior Elevation	— — —	Loose Lintel

FE	Fire Extinguisher	FE	Semi-recessed Fire Extinguisher
	Brick		Batt Insulation
	Acoustic Tile Ceramic Tile		Rigid Insulation
	Concrete		Gypsum Board
	Concrete Block		Plywood
	Earth		Wood Blocking
	Steel		Wood

ABBREVIATIONS

A.B.	ANCHOR BOLT	C.R.S.	CORROSION-RESISTANT STEEL	G.B.	GRAB BAR	NO	NUMBER	S&R	SHELF & ROD
ABV.	ABOVE	CRSI	CONCRETE REINFORCING STEEL INSTITUTE	GEN.	GENERAL	NRCA	NATIONAL ROOFING CONTRACTORS ASSOC.	S.S.	SERVICE SINK
A/C	AIR CONDITIONER	C/S	COUNTERSUNK	GL.	GLASS, GLAZED	N.T.S.	NOT TO SCALE	ST.STL.	STAINLESS STEEL
ACI	AMERICA CONCRETE INSTITUTE	C.T.	CERAMIC TILE	GR.	GRADE	O.C.	ON CENTER	STA.	STATION
ACST.	ACOUSTIC	CTG.	COATING	GRT.	GROUT	O.D.	OUTSIDE DIAMETER	STL.	STEEL
A.C.P.	ACOUSTICAL CEILING PANEL	CTR.	CENTER	G.W.B.	GYPSUM WALL BOARD	OHD.	OVERHEAD DOOR	STOR.	STORAGE
A.C.U.	AIR CONDITIONER UNIT	CU.	COPPER	GYP.	GYPSUM	OPG.	OPENING	STRUC.	STRUCTURE
A.D.	ACCESS DOOR	C.W.	COLD WATER	GYP.BD.	GYPSUM BOARD	OPP.	OPPOSITE	STRUCT.	STRUCTURAL
ADAPT.	ADAPTATION	DBL.	DOUBLE	H.C.	HANDICAPPED	O.W.	OBSERVATION WINDOW	SUB.	SUBCONTRACTOR
ADH.	ADHESIVE	DET.	DETAIL	HDBD.	HARDBOARD	O.W.S.J.	OPEN WEB STEEL JOIST	SUPER.	SUPERVISOR
ADJ.	ADJUSTABLE	D.F.	DRINKING FOUNTAIN	HDR	HEADER	P.	PLUMBING	SUSP.	SUSPEND
ADMIN.	ADMINISTRATION	DIA.	DIAMETER	HDWD.	HARDWOOD	PAR.	PARALLEL	S.V.F.	SHEET VINYL FLOORING
A.D.O.	AUTOMATIC DOOR OPERATOR	DIAG.	DIAGONAL	HDWE.	HARDWARE	P.C.	POURED CONCRETE	SW.	SIDEWALK
A/E	ARCHITECT/ENGINEER	DIM.	DIMENSION	H.M.	HOLLOW METAL	PERP.	PERPENDICULAR	SYM.	SYMMETRICAL
A.F.F.	ABOVE FINISH FLOOR	DISP.	DISPENSER	HOR.	HORIZONTAL	PL.	PLATE OR PLASTIC	T.	TOILET
ALT.	ALTERNATE	DN.	DOWN	H.P.	HIGH POINT	PLAS.	PLASTIC	TECH.	TECHNICIAN
ALUM.	ALUMINUM	DRSG.	DRESSING	H.R.	HANDRAIL	P.LAM.	PLASTIC LAMINATED	TEL.	TELEPHONE
ANCH.	ANCHOR	D.S.	DOWNSPOUT	HT.	HEIGHT	PLBG.	PLUMBING	T.GL.	TEMPERED
ANSI	AMERICAN NATIONAL STANDARDS INSTITUTE	DRWG.	DRAWING	HTG	HEATING	PLYWD.	PLYWOOD	TEMP.	TEMPERATURE
A.P.	ACCESS PANEL	DWR.	DRAWER	H.W.	HOT WATER	PNL.	PANEL	TEMP'Y	TEMPORARY
APPROX.	APPROXIMATE	E.	ELECTRICAL	INSUL.	INSULATION/INSULATING	PNT	PAINT	TERR.	TERRAZZO
ASPH.	ASPHALT	EA	EACH	INT.	INTERIOR	PORT.	PORTABLE	THK.	THICK
ASPPLK.	ASPHALT PLANK	EF	EXHAUST FAN	JNT.	JOINT	PROJ.	PROJECTION	T.O.M.	TOP OF MASONRY
ASSIST.	ASSISTANT	E.J.	EXPANSION JOINT	JST.	JOIST	P.S.	PRODUCT STANDARD	T.O.S.	TOP OF STEEL
ASTM	AMERICAN SOCIETY FOR TESTING & MATERIALS	EL.	ELEVATION	K.P.	KICK PLATE	PSF	POUNDS PER SQUARE FOOT	TOX.	TOXIC
A.T.	ACOUSTICAL TILE	ELEC.	ELECTRICELECTRICAL	LAM	LAMINATE	PSI	POUNDS PER SQUARE INCH	TR.	TREAD
AWS	AMERICAN WELDING SOCIETY	ELEV.	ELEVATION	LAV.	LAVATORY	PT.	PRESSURE TREATED	TRTD.	TREATED
BAL.	BALANCE	ENG	ENGINEER	LDR.	LEADER	PTD.	PAINTED	TRTMT.	TREATMENT
B.B.	BULLETIN BOARD	EP	ELECTRICAL PANEL	LKR.	LOCKER	PTN.	PARTITION	TV.C.TV	SCREEN OR MONITOR, CEILING MOUNTED
B.C.	BRICK COURSE	EPY	EPOXY COATING	LL	LOOSE LINTEL	P.V.C.	POLYVINYL CHLORIDE		
BRD.	BOARD	EQ	EQUAL	L.L.H.	LONG LEG HORIZONTAL	P.W.	PASS WINDOW	TV.W.TV	SCREEN OR MONITOR, WALL MOUNTED
BLDG.	BUILDING	EQUIP	EQUIPMENT	L.L.V.	LONG LEG VERTICAL	QA	QUALITY ASSURANCE	T.O.M.	TOP OF MASONRY
BLK.	BLOCK	E.S.	EACH SIDE	LOC.	LOCATION	Q.T.	QUARRY TILE	TYP.	TYPICAL
BLKG.	BLOCKING	EXAM	EXAMINATION	L.P.	LOW POINT	R	RADIUS OR RISER	UBC	UNIFORM BUILDING CODE
BM.	BEAM	EXIST.	EXISTING	LMSTN.	LIMESTONE	(R)	RELOCATED ITEM	UNAS.	UNASSIGNED
B.O.	BOTTOM OF	EXH.	EXHAUST	LT.	LIGHT	RBR	RUBBER BASE	U.N.O.	UNLESS NOTED OTHERWISE
B.O.L.	BOTTOM OF LINTEL	EXP	EXPOSED	M.	MECHANICAL	R&C	RECEPTION & CONTROL	UNPT.	UNPAINTED
BOT.	BOTTOM	EXPN.	EXPANSION	MANUF.	MANUFACTURER	R.C.P.	REFLECTED CEILING PLAN	U.P.S.	UNINTERRUPTIBLE POWER SUPPLY
B.R.	BUMPER RAIL	EXT.	EXTERIOR	MATL.	MATERIAL	R.D.	ROOF DRAIN	UR.	URINAL
BRKT.	BRACKET	F.A.I.	FRESH AIR INTAKE	MAX.	MAXIMUM	R.D.L.	ROOF DRAIN LEADER	UTIL.	UTILITY
BU	BUILT-UP	FC	FIRE CODE	M.B.	MODIFIED BITUMEN	REC.	RECEPTION	V.	VACUUM
CAB.	CABINET	F.B.O.	FURNISHED BY OTHERS	MECH.	MECHANICAL	REINF.	REINFORCED	V.B.	VAPOR BARRIER
C.B.	CATCH BASIN	F.C.	FILING CABINET	M.E.P.	MECHANICAL, ELECTRICAL, PLUMBING	REF.	REFRIGERATION	VCT	VINYL COMPOSITION TILE
C.C.	CONTRACTOR	F.C.U.	FAN COIL UNIT	MET.	METAL	REG.	REGLET	VERT.	VERTICAL
CLG.	CEILING	F.D.	FLOOR DRAIN	MFD.	MANUFACTURED	REHAB.	REHABILITATION	VEST.	VESTIBULE
CEM.	CEMENT	FE.	FIRE EXTINGUISHER	MFR.	MANUFACTURER	REPRO.	REPRODUCTION	V.H.	VINYL HOMOGENEOUS
CER.	CERAMIC	FE-W	WATER FIRE EXTINGUISHER	MGR.	MANAGER	REQ.	REQUIREMENT	VIN.	VINYL
C.FL.	CONDUCTIVE FLOORING	F.F.	FINISH FLOOR	MID.	MIDDLE	RESIL.	RESILIENT	V.T.R.	VENT THRU ROOF
CG	CORNER GUARD	F.H.C.	FIRE HOUSE CABINET	MIN.	MINIMUM	RM.	ROOM	V.W.C.	VINYL WALL COVERING
CIP	CAST-IN-PLACE	FHMS	FLAT HEAD MACHINE SCREW	MISC.	MISCELLANEOUS	R.O.	ROUGH OPENING	W.	WALL COVERING
C.J.	CONTROL JOINT	FIN.	FINISH	MLDG.	MOLDING	R.P.	RETRACTABLE PARTITION	W/	WITH
CLG.	CEILING	FLAM	FLAMMABLE	MTD.	MOUNTED	RST.	RESISTANCE	W.C.	WATER CLOSET
CL.GL.	CLEAR GLASS	FLR.	FLOOR	M.O.	MASONRY OPENING	R.T.	RUBBER TILE	WC	WHEEL CHAIR
CLO.	CLOSET	FLSHG.	FLASHING	MOIST.	MOISTURE	S.C.	SPECIAL COATING	WD.	WIDTH OR WOOD
CMU	CONCRETE MASONRY UNIT	FDN.	FOUNDATION	M.P.E.	MECHANICAL PLUMBING ELECTRICAL	SCHED.	SCHEDULE	W.HTR.	WATER HEATER
C.O.	CLEAN OUT	F.P.	FIRE PARTITION	M.R.	MOISTURE RESISTANT	SECT.	SECTION	W.I.	WROUGHT IRON
COL.	COLUMN	F.R.	FIRE RETARDANT	M.T.	METAL THRESHOLD	S.G.F.U.	STRUCTURAL GLAZED FACING UNITS	W.W.F.	WELDED WIRE FABRIC
CONC.	CONCRETE	F.SP.	FIRE STANDPIPE	MTL.	METAL	SH.	SHELVING, SHELF	WO	WITHOUT
CONST.	CONSTRUCTION	FTG.	FOOTING	M.T.P.	METAL TOILET PARTITION	SIM.	SIMILAR	W.P.	WATERPROOFING
CONT.	CONTINUOUS	F.GL.	FIXED GLASS	MULT.	MULTIPLE	S.J.C.	SEISMIC JOINT CEILING	W.R.	WASTE REPLACEMENT
CONTR.	CONTRACTOR	FUR'G	FURRING	NGVD	NATIONAL GEODETIC VERTICAL DATUM	S.J.F.	SEISMIC JOINT FLOORING	W.R.A.B.	WATER-RESISTIVE AIR BARRIER
CORR.	CORRIDOR	G.	GAS	NBS	NATIONAL BUREAU OF STANDARDS	S.J.W.	SEISMIC JOINT WALL	WSCT.	WAINSCOT
CPT.	CARPET	GA.	GAUGE	NIC	NOT IN CONTRACT	SPEC.	SPECIFICATIONS	W.T.	WALL TILE
C.R.	CARD READER	GALV.	GALVANIZED	NL	NEOPRENE LATEX	SQ.	SQUARE	W.V.F.	WELDED VINYL FLOORING

H2M architects + engineers
538 Broad Hollow Road, 4th Floor East
Melville, NY 11747
631.756.8000 • www.h2m.com

CONSULTANTS:

MARK	DATE	DESCRIPTION

REGISTERED ARCHITECT ROBERT BEE 032389 STATE OF NEW YORK

*ALTERATION OF THIS DOCUMENT EXCEPT BY A LICENSED PROFESSIONAL IS ILLEGAL.

DESIGNED BY:	DRAWN BY:	CHECKED BY:	REVIEWED BY:
KEM	JHG		

PROJECT No:	DATE:	SCALE:
VGFD2001	JULY 2022	AS SHOWN

CLIENT

VAILS GATE FIRE DISTRICT

New Storage Building (Phase I)
New Fire Station (Phase II)

872 Blooming Grove Turnpike
New Windsor, NY 12553

CONTRACT

CONTRACT G
GENERAL CONSTRUCTION

STATUS

FINAL BID DOCUMENT

SHEET TITLE

ARCHITECTURE
GENERAL NOTES AND LEGENDS
PHASE 1 & PHASE 2

DRAWING No.

G 002.00

C:\Users\jgazman\Documents\VGFD2001_Centra21_A_jgazman.rvt
7/18/2022 8:21:42 AM

SECTION 303-Changes in Level

303.1 GENERAL

CHANGES IN LEVEL IN FLOOR OR GROUND SURFACES SHALL COMPLY WITH SECTION 303.

303.2 VERTICAL

CHANGES IN LEVEL OF 1/4" INCH (6.4 MM) MAXIMUM IN HEIGHT SHALL BE PERMITTED TO BE VERTICAL.

FIG. 303.2
VERTICAL CHANGES IN LEVEL

303.3 BEVELED

CHANGES IN LEVEL BETWEEN 1/4" INCH (6.4 MM) IN HEIGHT AND NOT MORE 1/2" INCH (13 MM) HIGH MAXIMUM IN HEIGHT SHALL BE BEVELED WITH A SLOPE NOT STEEPER THAN 1:2.

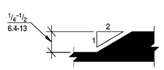

FIG. 303.3
BEVELED CHANGES IN LEVEL

303.4 RAMPS

CHANGES IN LEVEL GREATER THAN 1/2" INCH (13 MM) IN HEIGHT SHALL BE RAMPED AND SHALL COMPLY WITH SECTION 405 OR 406.

SECTION 304-Wheelchair Turning Space

304.1 GENERAL

A WHEELCHAIR TURNING SPACE SHALL COMPLY WITH SECTION 304

304.2 FLOOR SURFACE

FLOOR OR GROUND SURFACES OF A WHEELCHAIR TURNING SPACE SHALL HAVE A SLOPE NOT STEEPER THAN 1:48 AND SHALL COMPLY WITH SECTION 302.

304.3 SIZE

WHEELCHAIR TURNING SPACE SHALL COMPLY WITH SECTION 304.3.1 OR 304.3.2. INCLUDE KNEE AND TOE CLEARANCE COMPLYING WITH SECTION 306 ONLY AT THE END OF EITHER THE BASE OR ONE ARM.

304.3.1 CIRCULAR SPACE

THE WHEELCHAIR TURNING SPACE SHALL BE A CIRCULAR SPACE NOT LESS THAN 60 INCHES (1525 MM) DIAMETER MINIMUM. WHEELCHAIR TURNING SPACE SHALL BE PERMITTED TO INCLUDE KNEE AND TOE CLEARANCE COMPLYING WITH SECTION 306.

(A) CIRCULAR

304.3.2 T-SHAPED SPACE

THE WHEELCHAIR TURNING SPACE SHALL BE A T-SHAPED SPACE WITHIN A 60 INCH (1525 MM) MINIMUM SQUARE WITH ARMS AND BASE 36 INCHES (915 MM) WIDE MINIMUM. EACH ARM OF THE "T" SHALL BE CLEAR OF OBSTRUCTIONS 12 INCHES (610 MM) MINIMUM IN EACH DIRECTION AND THE BASE SHALL BE CLEAR OF OBSTRUCTIONS 24" INCHES (610 MM) MINIMUM.

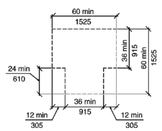

(B) T-SHAPED
FIG. 304.3
SIZE OF WHEELCHAIR TURNING SPACE

304.3 DOOR SWING

UNLESS OTHERWISE SPECIFIED, DOORS SHALL BE PERMITTED TO SWING INTO WHEELCHAIR TURNING SPACES.

SECTION 305-Clear Floor Space

305.1 GENERAL

A CLEAR FLOOR SPACE SHALL COMPLY WITH SECTION 305.

305.2 FLOOR SURFACES

FLOOR SURFACES OF A CLEAR FLOOR SPACE SHALL HAVE A SLOPE NOT STEEPER THAN 1:48 AND SHALL COMPLY WITH SECTION 302. CHANGES IN LEVEL ARE NOT PERMITTED WITHIN THE CLEAR FLOOR SPACE.

305.3 SIZE

THE CLEAR FLOOR SPACE SHALL BE 48 INCHES (1220 MM) MINIMUM IN LENGTH AND 30 INCHES (760MM) MINIMUM IN WIDTH

305.4 KNEE AND TOE CLEARANCE

UNLESS OTHERWISE SPECIFIED, CLEAR FLOOR SPACE SHALL BE PERMITTED TO INCLUDE KNEE AND TOE CLEARANCE COMPLYING WITH SECTION 306.

305.5 POSITION

UNLESS OTHERWISE SPECIFIED, THE CLEAR FLOOR SPACE SHALL BE POSITIONED FOR EITHER FORWARD OR PARALLEL APPROACH TO AN ELEMENT.

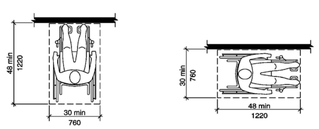

(A) FORWARD (B) PARALLEL

FIG. 305.5
POSTION OF CLEAR FLOOR SPACE

305.6 APPROACH

ONE FULL, UNOBSTRUCTED SIDE OF THE CLEAR FLOOR SPACE SHALL ADJOIN OR OVERLAP AN ACCESSIBLE ROUTE OR ADJOIN ANOTHER CLEAR FLOOR SPACE.

305.7 ALCOVES

IF A CLEAR FLOOR SPACE IS IN AN ALCOVE OR OTHERWISE CONFINED ON ALL OR PART OF THREE SIDES, ADDITIONAL MANEUVERING CLEARANCES COMPLYING WITH SECTIONS 305.7.1 AND 305.7.2 SHALL BE PROVIDED, AS APPLICABLE.

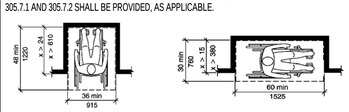

(A) FORWARD APPROACH (B) PARALLEL APPROACH

FIG. 305.7
MANEUVERING CLEARANCE IN AN ALCOVE

305.7.1 PARALLEL APPROACH

WHERE THE CLEAR FLOOR SPACE IS POSITIONED FOR A PARALLEL APPROACH, THE ALCOVE SHALL BE 60" INCHES (1525 MM) MINIMUM IN WIDTH WHERE THE DEPTH EXCEEDS 15".

305.7.2 FORWARD APPROACH

WHERE THE CLEAR FLOOR SPACE IS POSITIONED FOR A FORWARD APPROACH, THE ALCOVE SHALL BE 36" INCHES (915 MM) MINIMUM IN WIDTH WHERE THE DEPTH EXCEEDS 24" INCHES (610 MM).

SECTION 306-Knee and Toe Clearance

306.1 GENERAL

WHERE SPACE BENEATH AN ELEMENT IS INCLUDED AS PART OF CLEAR FLOOR OR GROUND SPACE AT AN ELEMENT, CLEARANCE AT AN ELEMENT, OR A WHEELCHAIR TURNING SPACE, THE SPACE SHALL COMPLY WITH SECTION 306. ADDITIONAL SPACE NOT BE PROHIBITED BENEATH AN ELEMENT, BUT SHALL NOT BE CONSIDERED AS PART OF THE CLEAR FLOOR SPACE OR TURNING SPACE

306.2 TOE CLEARANCE

306.2.1 GENERAL

SPACE UNDER AN ELEMENT BETWEEN THE FLOOR OR GROUND AND 9" INCHES (230 MM) ABOVE THE FLOOR OR GROUND SHALL BE TOE CLEARANCE AND SHALL COMPLY WITH SECTION 306.2.

306.2.2 MAXIMUM DEPTH

TOE CLEARANCE SHALL BE PERMITTED TO EXTEND 25" INCHES (635 MM) MAXIMUM UNDER AN ELEMENT.

306.2.3 MINIMUM DEPTH

WHERE TOE CLEARANCE IS REQUIRED AT AN ELEMENT AS PART OF A CLEAR FLOOR OR GROUND SPACE, THE TOE CLEARANCE SHALL EXTEND 17" INCHES (430 MM) MINIMUM BENEATH THE ELEMENT

306.2.4 ADDITIONAL CLEARANCE

SPACE EXTENDING GREATER THAN 6" INCHES (150 MM) BEYOND THE AVAILABLE KNEE CLEARANCE AT 9" INCHES (230 MM) ABOVE THE FLOOR OR GROUND SHALL NOT BE INCLUDED IN TOE CLEARANCE.

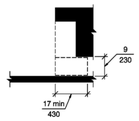

FIG. 306.2
TOE CLEARANCE

306.2.5 WIDTH

TOE CLEARANCE SHALL BE 30" INCHES (760 MM) WIDE MINIMUM.

306.3 KNEE CLEARANCE

306.3.1 WIDTH

SPACE UNDER AN ELEMENT BETWEEN 9" INCHES (230 MM) AND 27" INCHES (685 MM) ABOVE THE FLOOR OR GROUND SHALL BE KNEE CLEARANCE AND SHALL COMPLY WITH SECTION 306.3.

306.3.2 MAXIMUM DEPTH

KNEE CLEARANCE SHALL BE PERMITTED TO EXTEND 25" INCHES (635 MM) MAXIMUM UNDER AN ELEMENT AT 9" INCHES (230 MM) ABOVE THE FLOOR OR GROUND.

306.3.3 MINIMUM DEPTH

WHERE KNEE CLEARANCE IS REQUIRED BENEATH AN ELEMENT AS PART OF A CLEAR FLOOR OR GROUND SPACE, THE KNEE

CLEARANCE SHALL BE 11" INCHES (280 MM) DEEP MINIMUM AT 9" INCHES (230 MM) ABOVE THE FLOOR OR GROUND, AND 8" INCHES (205 MM) DEEP MINIMUM AT 27" INCHES (685 MM) ABOVE THE FLOOR OR GROUND.

306.3.4 CLEARANCE REDUCTION

BETWEEN 9" INCHES (230 MM) AND 27" INCHES (685 MM) ABOVE THE FLOOR OR GROUND, THE KNEE CLEARANCE SHALL BE PERMITTED TO BE REDUCED AT A RATE OF 1" INCH (25 MM) FOR EACH 6" INCHES (150 MM) IN HEIGHT.

306.3.5 WIDTH

KNEE CLEARANCE SHALL BE 30" INCHES (760 MM) WIDE MINIMUM.

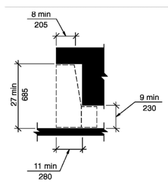

FIG. 306.3
KNEE CLEARANCE

SECTION 307- Protruding Objects

307.1 GENERAL

PROTRUDING OBJECTS ON CIRCULATION PATHS SHALL COMPLY WITH SECTION 307.

307.2 PROTRUSION LIMITS

OBJECTS WITH LEADING EDGES MORE THAN 27" INCHES (685 MM) AND NOT MORE THAN 80" INCHES (2030 MM) ABOVE THE FLOOR SHALL PROTRUDE 4" INCHES (100MM) MAXIMUM HORIZONTALLY INTO THE CIRCULATION PATH.

EXCEPTION:

HANDRAILS SHALL BE PERMITTED TO PROTRUDE 4- 1/2" INCHES (115 MM) MAXIMUM.

307.3 POST-MOUNTED OBJECTS

OBJECTS ON POSTS OR PYLONS SHALL BE PERMITTED TO OVERHANG 4" INCHES (100MM) MAXIMUM WHERE MORE THAN 27" INCHES (685 MM) AND NOT MORE THAN 80" INCHES (2030 MM) ABOVE THE FLOOR. OBJECTS ON MULTIPLE POSTS OR PYLONS WHERE THE CLEAR DISTANCE BETWEEN THE POSTS OR PYLONS IS GREATER THAN 12" INCHES (305 MM) SHALL HAVE THE LOWEST EDGE OF SUCH OBJECT EITHER 27" INCHES (685 MM) MAXIMUM OR 80" INCHES (2030 MM) MINIMUM ABOVE THE FLOOR.

EXCEPTION:

SLOPING PORTIONS OF HANDRAILS BETWEEN THE TOP AND BOTTOM RISER OF STAIRS AND ABOVE THE RAMP RUN SHALL NOT BE REQUIRED TO COMPLY WITH SECTION 307.3.

307.4 VERTICAL CLEARANCE

VERTICAL CLEARANCE SHALL BE 80" INCHES (2030) MINIMUM. RAILS OR OTHER BARRIERS SHALL BE PROVIDED WHERE THE VERTICAL CLEARANCE IS LESS THAN 80" INCHES (2030 MM). THE LEADING EDGE OF SUCH RAILS OR BARRIER SHALL BE LOCATED 27" INCHES (685 MM) MAXIMUM ABOVE THE FLOOR.

EXCEPTION:

DOOR CLOSERS AND DOOR STOPS SHALL BE PERMITTED TO BE 78" INCHES (1980 MM) MINIMUM ABOVE THE FLOOR.

307.5 REQUIRED CLEAR WIDTH

PROTRUDING OBJECTS SHALL NOT REDUCE THE CLEAR WIDTH REQUIRED FOR ACCESSIBLE ROUTES.

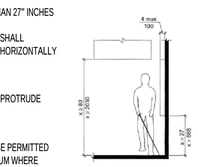

FIG. 307.2
LIMITS OF PROTRUDING OBJECTS

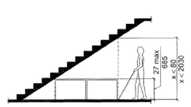

FIG. 307.4
REDUCED VERTICAL CLEARANCE

Section 308-Reach Ranges

308.1 GENERAL

REACH RANGES SHALL COMPLY WITH SECTION 308.

308.2 FORWARD REACH

308.2.1 UNOBSTRUCTED

WHERE A FORWARD REACH IS UNOBSTRUCTED, THE HIGH FORWARD REACH SHALL BE 48" INCHES (1220 MM) MAXIMUM AND THE LOW FORWARD REACH SHALL BE 15" INCHES (380 MM) MINIMUM ABOVE THE FLOOR.

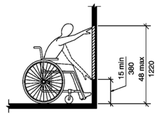

FIG. 308.2.1
UNOBSTRUCTED FORWARD REACH

308.2.2 OBSTRUCTED HIGH REACH

WHERE A HIGH FORWARD REACH IS OVER AN OBSTRUCTION, THE CLEAR FLOOR SPACE

COMPLYING WITH SECTION 305 SHALL EXTEND BENEATH THE ELEMENT FOR A DISTANCE NOT LESS THAN THE REQUIRED REACH DEPTH OVER THE OBSTRUCTION. THE HIGH FORWARD REACH SHALL BE 48" INCHES (1220 MM) MAXIMUM WHERE THE REACH DEPTH IS 20" INCHES (510 MM) MAXIMUM. WHERE THE REACH DEPTH EXCEEDS 20" INCHES (510 MM), THE HIGH FORWARD REACH SHALL BE 44" INCHES (1120 MM) MAXIMUM AND THE REACH DEPTH SHALL BE 25" INCHES (635 MM) MAXIMUM.

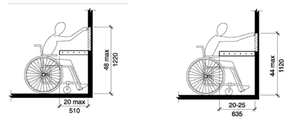

(a) (b)

FIG. 308.2.2
OBSTRUCTED HIGH FORWARD REACH

308.3 SIDE REACH

308.3.1 UNOBSTRUCTED

WHERE A CLEAR FLOOR SPACE COMPLYING WITH SECTION 305 ALLOWS A PARALLEL APPROACH TO AN ELEMENT AND THE EDGE OF THE CLEAR FLOOR SPACE IS 10" INCHES MAXIMUM FROM THE ELEMENT, THE HIGH SIDE REACH SHALL BE 48" INCHES MAXIMUM AND THE LOW SIDE REACH SHALL BE 15" INCHES MINIMUM ABOVE THE FLOOR.

EXCEPTION:

EXISTING ELEMENTS SHALL BE PERMITTED AT 54" INCHES (1370 MM) MAXIMUM ABOVE THE FLOOR.

308.3.2 OBSTRUCTED HIGH REACH

WHERE A CLEAR FLOOR SPACE ALLOWS A PARALLEL APPROACH TO AN OBJECT AND THE HIGH SIDE REACH IS OVER AN OBSTRUCTION, THE HEIGHT OF THE OBSTRUCTION SHALL BE 34" INCHES (865 MM) MAXIMUM AND THE DEPTH OF THE OBSTRUCTION SHALL BE 24" INCHES (610 MM) MAXIMUM. THE HIGH SIDE REACH SHALL BE 48" INCHES (1220 MM) MAXIMUM FOR A REACH DEPTH OF 10" INCHES (255 MM) MAXIMUM. WHERE THE REACH DEPTH EXCEEDS 10" INCHES (255 MM), THE HIGH SIDE REACH SHALL BE 46" INCHES (1170 MM) MAXIMUM FOR A REACH DEPTH OF 24" INCHES (610 MM) MAXIMUM

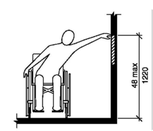

FIG. 308.3.1
UNOBSTRUCTED SIDE REACH

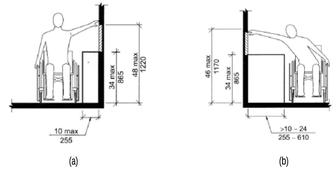

(a) (b)

FIG. 308.3.2
OBSTRUCTED HIGH SIDE REACH

EXCEPTION:

AT WASHING MACHINES AND CLOTHES DRYERS, THE HEIGHT OF THE OBSTRUCTION SHALL BE PERMITTED TO BE 36" INCHES (915 MM) MAXIMUM ABOVE THE FLOOR.

Section 402 - Accessible Routes

404.1 GENERAL

ACCESSIBLE ROUTES SHALL COMPLY WITH SECTION 402.

402.2 COMPONENTS

ACCESSIBLE ROUTES SHALL CONSISTS OF ONE OR MORE OF THE FOLLOWING COMPONENTS: WALKING SURFACES WITH A SLOPE NOT STEEPER THAN 1:20, DOORS AND DOORWAYS, RAMPS, CURB RAMPS EXCLUDING THE FLARED SIDES, ELEVATORS AND PLATFORM LIFTS. ALL COMPONENTS OF AN ACCESSIBLE ROUTE SHALL COMPLY WITH THE APPLICABLE PORTIONS OF THIS STANDARD.

Section 403 - Walking Surfaces

403.1 GENERAL

WALKING SURFACES THAT ARE A PART OF AN ACCESSIBLE ROUTE SHALL COMPLY WITH SECTION 403.

403.3 SLOPE

THE RUNNING SLOPE OF WALKING SURFACES SHALL NOT BE STEEPER THAN 1:20. THE CROSS SLOPE OF A WALKING SURFACE SHALL NOT BE STEEPER THAN 1:48.

403.4 CHANGES IN LEVEL

CHANGES IN LEVEL SHALL SHALL COMPLY WITH SECTION 303

403.5 CLEAR WIDTH

THE CLEAR WIDTH OF AN ACCESSIBLE ROUTE SHALL BE 36" INCHES (915 MM) MINIMUM.

EXCEPTION:

THE CLEAR WIDTH SHALL BE PERMITTED TO BE REDUCED TO 32" INCHES (815 MM) MINIMUM FOR A LENGTH OF 24" INCHES (610MM) MAXIMUM PROVIDED THE REDUCED WIDTH SEGMENTS ARE SEPARATED BY SEGMENTS THAT ARE 48" INCHES (1220 MM) MINIMUM IN LENGTH AND 36" INCHES (915 MM) MINIMUM IN WIDTH.

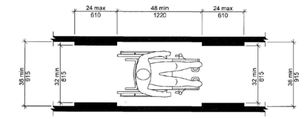

FIG. 403.5
CLEAR WIDTH OF AN ACCESSIBLE ROUTE

Section 404 - Doors and Doorways

404.1 GENERAL

DOORS AND DOORWAYS THAT ARE PART OF AN ACCESSIBLE ROUTE SHALL COMPLY WITH SECTION 404.

404.2 MANUAL DOORS

MANUAL DOORS AND DOORWAYS AND MANUAL GATES, INCLUDING TICKET GATES SHALL COMPLY WITH THE REQUIREMENTS OF SECTION 404.2.

404.2.1 DOUBLE - LEAF DOORS AND GATES

AT LEAST ONE OF THE ACTIVE LEAVES OF DOORWAYS WITH TWO LEAVES SHALL COMPLY WITH SECTIONS 404.2.2 AND 402.2.3.

404.2.2 CLEAR WIDTH

DOORWAYS SHALL HAVE A CLEAR OPENING WIDTH OF 32" INCHES (815 MM) MIN. CLEAR OPENING WITH OF DOORWAYS WITH SWINGING DOORS SHALL BE MEASURED BETWEEN THE FACE OF DOOR AND STOP, WITH THE DOOR OPEN 90 DEGREES. OPENINGS MORE THAN 24" (610 MM) INCHES IN DEPTH AT DOORS AND DOORWAYS WITHOUT DOORS SHALL PROVIDE A CLEAR OPENING WIDTH OF 36" (915 MM) MINIMUM. THERE SHALL BE NO PROJECTIONS INTO THE CLEAR OPENING WIDTH LOWER THAN 34" (865 MM) INCHES ABOVE THE FLOOR. PROJECTIONS INTO THE CLEAR OPENING WIDTH BETWEEN 34" (865 MM) INCHES AND 80" (2030 MM) INCHES ABOVE THE FLOOR SHALL NOT EXCEED 4" (100 MM) INCHES.

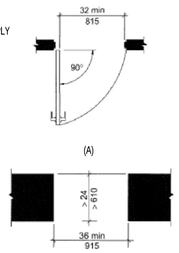

(A)

(D)
FIG.404.2.2
CLEAR WIDTH OF DOORWAYS

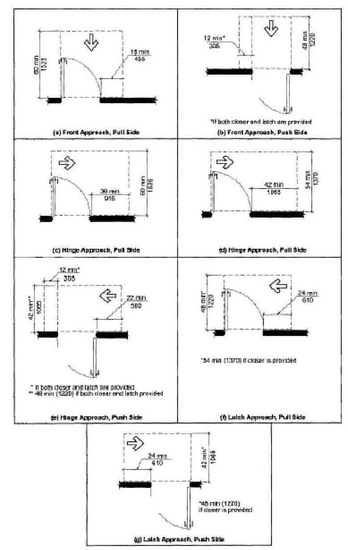

FIG. 404.2.3.2
MANEUVERING CLEARANCE AT MANUAL SWINGING DOORS

404.2.4 THRESHOLDS

IF PROVIDED, THRESHOLDS AT DOORWAYS SHALL BE 1/2" INCH (13 MM) MAXIMUM IN HEIGHT. RAISED THRESHOLDS AND CHANGES IN LEVEL AT DOORWAYS SHALL COMPLY WITH SECTIONS 302 AND 303.

404.2.5 TWO DOORS IN SERIES

DISTANCE BETWEEN TWO HINGED OR PIVOTED DOORS IN SERIES SHALL BE 48 INCHES (1220 MM) MINIMUM PLUS THE WIDTH OF ANY DOOR SWINGING INTO THE SPACE. THE SPACE BETWEEN THE DOORS SHALL PROVIDE A TURNING SPACE COMPLYING WITH SECTION 304.

404.2.6 DOOR HARDWARE

HANDLES, PULLS, LATCHES, LOCKS AND OTHER OPERABLE PARTS ON ACCESSIBLE DOORS SHALL HAVE A SHAPE THAT IS EASY TO GRASP WITH ONE HAND AND DOES NOT REQUIRE TIGHT GRASPING, PINCHING OR TWISTING OF THE WRIST TO OPERATE. OPERABLE PARTS OF SUCH HARDWARE SHALL BE 34" INCHES (865 MM) MINIMUM AND 48" INCHES (1220 MM) MAXIMUM ABOVE THE FLOOR. WHERE SLIDING DOORS ARE IN THE FULLY OPEN POSITION, OPERATING HARDWARE SHALL BE EXPOSED AND USABLE FROM BOTH SIDES.

EXCEPTION:

LOCKS USED ONLY FOR SECURITY PURPOSES AND NOT USED FOR NORMAL OPERATION SHALL NOT BE REQUIRED TO COMPLY WITH SECTION 404.2.6.

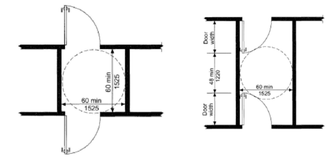

(A) (B)

Section 405 - Ramps

405.1 GENERAL

RAMPS ALONG ACCESSIBLE ROUTES SHALL BE COMPLY WITH SECTION 405.

405.2 SLOPE

RAMP RUN SHALL HAVE A RUNNING SLOPE GREATER THAN 1:20 AND NOT STEEPER THAN 1:12.

405.5 CLEAR WIDTH

THE CLEAR WIDTH OF A RAMP RUN SHALL BE 36" INCHES (915 MM) MINIMUM. HANDRAILS AND HANDRAIL SUPPORTS THAT ARE PROVIDED ON THE RAMP RUN SHALL NOT PROJECT INTO THE REQUIRED CLEAR WIDTH OF THE RAMP RUN.

405.6 RISE

THE RISE FOR ANY RAMP RUN SHALL BE 30" INCHES (760 MM) MAXIMUM.

405.7 LANDING

RAMPS SHALL HAVE LANDINGS AT THE BOTTOM AND TOP OF EACH RAMP RUN. LANDINGS SHALL COMPLY WITH SECTION 405.7.

405.7.1 SLOPE

LANDINGS SHALL HAVE A SLOPE NOT STEEPER THAN 1:48 AND SHALL COMPLY WITH SECTION 302.

405.7.2 WIDTH

CLEAR WIDTH OF LANDINGS SHALL BE AT LEAST AS WIDE AS THE WIDEST RAMP RUN LEADING TO THE LANDING.

405.7.3 LENGTH

LANDINGS SHALL HAVE A CLEAR LENGTH OF 60" INCHES (1525 MM) MINIMUM.

(C)

FIG.404.2.5
TWO DOORS IN A SERIES

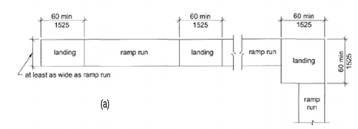

(a) (b)

FIG. 405.7
RAMP LANDINGS

405.7.4 CHANGE IN DIRECTION

RAMPS THAT CHANGE DIRECTION AT RAMP LANDINGS SHALL BE SIZED TO PROVIDE A TURNING SPACE COMPLYING WITH SECTION 304.3.

405.7.5 DOORWAYS

WHERE DOORWAYS ARE ADJACENT TO A RAMP LANDING, MANEUVERING CLEARANCES REQUIRED BY SECTIONS 404.2.3 AND 404.3.2 SHALL BE PERMITTED TO OVERLAP THE LANDING AREA. WHERE A DOOR THAT IS SUBJECT TO LOCKING IS LOCATED ADJACENT TO A RAMP LANDING, THE LANDING SHALL BE SIZED TO PROVIDE A TURNING SPACE COMPLYING WITH SECTION 304.3.

405.8 HANDRAILS

RAMPS RUNS WITH A RISE GREATER THAN 6 INCHES (150 MM) SHALL HAVE HANDRAILS COMPLYING WITH SECTION 505.

SECTION 406- Curb Ramps

406.1 GENERAL

CURB RAMPS ON ACCESSIBLE ROUTES SHALL COMLY WITH SECTIONS 406, 405.2, 405.3 AND 405.10.

406.2 COUNTER SLOPE

COUNTER SLOPES OF ADJOINING GUTTERS AND ROAD SURFACES IMMEDIATELY ADJACENT TO THE CURB RAMP SHALL NOT BE STEEPER THAN 1:20. THE ADJACENT SURFACES AT TRANSITIONS AT CURB RAMPS TO WALKS, GUTTERS AND STREETS SHALL BE AT THE SAME LEVEL.

406.4 WIDTH

CURB RAMP SHALL BE 36 INCHES (915 MM) MINIMUM IN WIDTH, EXCLUSIVE OF FLARED SIDES.

406.6 LOCATION

CURB RAMPS AND THE FLARED SIDES OF CURB RAMPS SHALL BE LOCATED SO THEY DO NOT PROJECT INTO VEHICULAR TRAFFIC LANES, PARKING SPACES OR PARKING ACCESS AISLES. CURB RAMPS AT MARKED CROSSINGS SHALL BE WHOLLY CONTAINED WITHIN THE MARKINGS, EXCLUDING ANY FLARED SIDES.

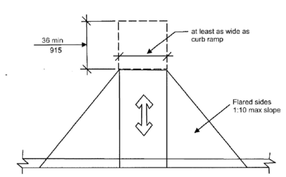

FIG. 406.7
LANDINGS

H 2 M architects + engineers

538 Broad Hollow Road, 4th Floor East
Melville, NY 11747
631.756.8000 • www.h2m.com

CONSULTANTS:

MARK	DATE	DESCRIPTION

REGISTERED ARCHITECT ROBERT BEE 032389 STATE OF NEW YORK

*ALTERATION OF THIS DOCUMENT EXCEPT BY A LICENSED PROFESSIONAL IS ILLEGAL.

DESIGNED BY:	DRAWN BY:	CHECKED BY:	REVIEWED BY:
KEM	JHG		
PROJECT No: VGFD2001	DATE: JULY 2022		SCALE: AS SHOWN

CLIENT

VAILS GATE FIRE DISTRICT

New Storage Building (Phase I)
New Fire Station (Phase II)

872 Blooming Grove Turnpike
New Windsor, NY 12553

CONTRACT

CONTRACT G
GENERAL CONSTRUCTION

STATUS

FINAL BID DOCUMENT

SHEET TITLE

ARCHITECTURE
GENERAL ACCESSIBILITY REQUIREMENTS
PHASE 1 & PHASE 2

DRAWING No.

G 003.00

C:\Users\jguzman\Documents\VGFD2001_Central21_A_jguzman.rvt
7/18/2022 8:22:28 AM

SECTION 407- Elevators

407.1 GENERAL

ELEVATORS SHALL COMPLY WITH SECTION 407 AND ASME A17.1/CSA B44 LISTED IN SECTION 105.2.5. ELEVATORS SHALL BE PASSENGER ELEVATORS AS CLASSIFIED BY ASME A17.1/CSA B44. ELEVATOR OPERATION SHALL BE AUTOMATIC.

407.2 ELEVATOR LANDING REQUIREMENTS

ELEVATOR LANDINGS SHALL COMPLY WITH SECTION 407.2.

407.2.1 CALL CONTROL

WHERE ELEVATOR CALL BUTTONS OR KEYPADS ARE PROVIDED, THEY SHALL COMPLY WITH SECTIONS 407.2.1 AND 309.4. CALL BUTTONS SHALL BE RAISED OR FLUSH. OBJECTS BENEATH HALL CALL BUTTONS SHALL PROTRUDE 1" INCH (25 MM) MAXIMUM.

EXCEPTION:

1. EXISTING ELEVATORS SHALL BE PERMITTED TO HAVE RECESSED CALL BUTTONS.
2. THE RESTRICTION ON OBJECTS BENEATH CALL BUTTONS SHALL NOT APPLY TO EXISTING CALL BUTTONS.

407.2.1.1 HEIGHT

CALL BUTTONS AND KEYPADS SHALL BE LOCATED WITHIN ONE OF THE REACH RANGES SPECIFIED IN SECTION 308, MEASURED TO THE CENTERLINE OF THE HIGHEST OPERABLE PART.

EXCEPTION:

EXISTING CALL BUTTONS AND EXISTING KEYPADS SHALL BE PERMITTED TO BE LOCATED 54 INCHES (1370 MM) MAXIMUM ABOVE THE FLOOR MEASURED TO THE CENTERLINE OF THE HIGHEST OPERABLE PART.

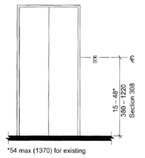

FIG. 407.2.1.1
HEIGHT OF ELEVATOR CALL BUTTONS

407.2.2 HALL SIGNALS

HALL SIGNALS, INCLUDING IN-CAR SIGNALS, SHALL COMPLY WITH SECTION 407.2.2

407.2.2.1 VISIBLE AND AUDIBLE SIGNALS

A VISIBLE AND AUDIBLE SIGNAL SHALL BE PROVIDED AT EACH HOISTWAY ENTANCE TO INDICATE WHICH CAR IS ANSWERING A CALL AND THE CAR'S DIRECTION OF TRAVEL. WHERE IN-CAR SIGNALS ARE PROVIDED THEY SHALL BE VISIBLE FROM THE FLOOR AREA ADJACENT TO THE HALL CALL BUTTONS.

407.2.2.2 VISIBLE SIGNALS

VISIBLE SIGNAL FIXTURES SHALL BE CENTERED AT 72" INCHES (1830 MM) MINIMUM ABOVE THE FLOOR. THE VISIBLE SIGNAL ELEMENTS SHALL BE 2-1/2" INCHES (64 MM) MINIMUM BETWEEN THE UPPERMOST AND LOWEST EDGES OF THE ILLUMINATED SHAPE MEASURED VERTICALLY. SIGNALS SHALL BE VISIBLE FROM THE FLOOR AREA ADJACENT TO THE HALL CALL BUTTON.

407.2.2.3 AUDIBLE SIGNALS

AUDIBLE SIGNALS SHALL SOUND ONCE FOR THE UP DIRECTION AND TWICE FOR THE DOWN DIRECTION. OR SHALL HAVE VERBAL ANNUNCIATORS THAT INDICATE THE DIRECTION OF ELEVATOR CAR TRAVEL. AUDIBLE SIGNALS SHALL HAVE A FREQUENCY OF 1500 HZ MAXIMUM.

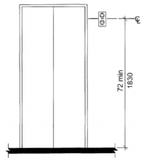

(A)

407.2.3 HOISTWAY SIGNS

SIGNS AT ELEVATOR HOISTWAYS SHALL COMPLY WITH SECTION 407.2.3.

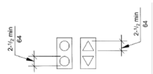

(B)

FIG. 407.2.2.2
ELEVATOR VISIBLE SIGNALS

407.2.3.1 FLOOR DESIGNATION

FLOOR DESIGNATIONS SHALL BE PROVIDED IN RAISED CHARACTERS AND BRAILLE COMPLYING WITH SECTIONS 703.3 AND 703.4. RAISED CHARACTERS SHALL BE 2" INCHES (51 MM) MINIMUM IN HEIGHT. FLOOR DESIGNATIONS SHALL BE LOCATED ON BOTH JAMBS OR ELEVATOR HOISTWAY ENTRANCES. A RAISED STAR SHALL BE PROVIDED ON BOTH JAMBS AT THE MAIN ENTRY LEVEL.

407.2.3.2 CAR IDENTIFICATION

DESTINATION ORIENTED ELEVATORS SHALL PROVIDE CAR IDENTIFICATION IN RAISED CHARACTERS AND BRAILLE COMPLYING WITH SECTIONS 703.3 AND 703.4.

407.2.4 DESTINATION SIGNS

WHERE SIGNS INDICATE THAT ELEVATORS DO NOT SERVE ALL LANDINGS, SIGNS IN RAISED CHARACTERS AND BRAILLE COMPLYING WITH SECTIONS 703.3 AND 703.4 SHALL BE PROVIDED ABOVE THE HALL CALL BUTTON OR KEYPAD.

407.3 ELEVATOR DOOR REQUIREMENTS

HOISTWAY AND ELEVATOR CAR DOORS SHALL COMPLY WITH SECTION 407.3.

407.3.1 TYPE

ELEVATOR DOORS SHALL BE HORIZONTAL SLIDING TYPE. CAR GATES SHALL BE PROHIBITED.

407.3.2 OPERATION

ELEVATOR HOISTWAY AND CAR DOORS SHALL OPEN AND CLOSE AUTOMATICALLY.

407.4 ELEVATOR CAR REQUIREMENTS

ELEVATOR CARS SHALL COMPLY WITH SECTION 407.4.

407.4.1 INSIDE DIMENSIONS

INSIDE DIMENSIONS OF ELEVATOR CARS SHALL COMPLY WITH TABLE 407.4.1.

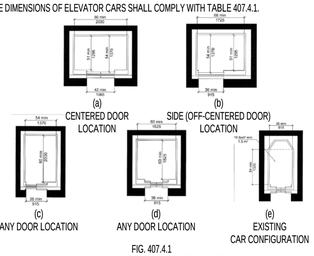

FIG. 407.4.1
INSIDE DIMENSIONS OF ELEVATOR CARS

FIG. 407.4.1
INSIDE DIMENSIONS OF ELEVATOR CARS

Door Location	Door Clear Opening Width	Inside Car, Side to Side	Inside Car, Back Wall to Front Return	Inside Car, Back Wall to Inside Face
Centered	42 inches (1065 mm)	80 inches (2030 mm)	51 inches (1295 mm)	54 inches (1370 mm)
Side (Off Center)	36 inches (915 mm)[a]	68 inches (1725 mm)	51 inches (1295 mm)	54 inches (1370 mm)
Any	36 inches (915 mm)[a]	54 inches (1370 mm)	80 inches (2030 mm)	80 inches (2030 mm)
Any	36 inches (915 mm)[a]	60 inches (1525 mm)[b]	60 inches (1525 mm)[b]	60 inches (1525 mm)[b]

[a] A tolerance of minus $\frac{1}{8}$ inch (16 mm) is permitted.
[b] Other car configurations that provide a 36-inch (915 mm) door clear opening width and a turning space complying with Section 304 with the door closed are permitted.

SECTION 502 - Parking Spaces

502.1 GENERAL

ACCESSIBLE CAR AND VAN PARKING SPACES SHALL COMPLY WITH SECTION 502.

502.2 VEHICLE SPACE SIZE

CAR PARKING SPACES SHALL BE 96" INCHES (2440 MM) MINIMUM IN WIDTH. VAN PARKING SPACES SHALL BE 132" INCHES (3350 MM) MINIMUM IN WIDTH

EXCEPTION:

VAN PARKING SPACES SHALL BE PERMITTED TO BE 96" INCHES (2440 MM) MINIMUM IN WIDTH WHERE THE ADJACENT ACCESS AISLE IS 96" INCHES (2440 MM) MINIMUM IN WIDTH.

502.3 VEHICLE SPACE MARKING

CAR AND VAN PARKING SPACES SHALL BE MARKED TO DEFINE THE WIDTH. WHERE PARKING SPACES ARE MARKED WITH LINES, THE WIDTH MEASUREMENTS OF PARKING SPACES AND ADJACENT ACCESS AISLES SHALL BE MADE FROM THE CENTERLINE OF THE MARKINGS.

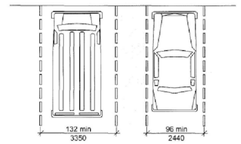

FIG. 502.2
VEHICLE PARKING SPACE SIZE

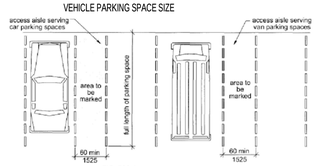

FIG. 502.4
PARKING SPACE ACCESS AISLE

502.4 ACCESS AISLE

CAR AND VAN PARKING SPACES SHALL HAVE AN ADJACENT ACCESS AISLE COMPLYING WITH SECTION 502.4.

502.4.1 LOCATION

ACCESS AISLES SHALL ADJOIN AN ACCESSIBLE ROUTE. TWO PARKING SPACES SHALL BE PERMITTED TO SHARE A COMMON ACCESS AISLE. ACCESS AISLES SHALL NOT OVERLAP WITH THE VEHICULAR WAY. PARKING SPACES SHALL BE PERMITTED TO HAVE ACCESS AISLES PLACED ON WITHER SIDE OF THE CAR OR VAN PARKING SPACE. VAN PARKING SPACES THAT ARE ANGLED SHALL HAVE ACCESS AISLES LOCATED ON THE PASSENGER SIDE OF THE PARKING SPACE.

502.4.2 WIDTH

ACCESS AISLES SERVING CAR AND VAN PARKING SPACES SHALL BE 60" INCHES (1525 MM) MINIMUM IN WIDTH.

502.4.3 LENGTH

ACCESS AISLES SHALL EXTEND THE FULL LENGTH OF TH3 PARKING SPACES THEY SERVE.

502.4.4 MARKING

ACCESS AISLES SHALL BE MARKED SO AS TO DISCOURAGE PARKING IN THEM. WHERE ACCESS AISLES ARE MARKED WITH LINES, THE WIDTH MEASUREMENTS OF ACCESS AISLES AND ADJACENT PARKING SPACES SHALL BE MADE FROM THE CENTERLINE OF THE MARKINGS.

SECTION 504 - Stairways

504.1 GENERAL

ACCESSIBLE STAIRS SHALL COMPLY WITH SECTION 504.

504.2 TREADS AND RISERS

ALL STEPS ON A FLIGHT OF STAIRS SHALL HAVE UNIFORM RISER HEIGHT AND UNIFORM TREAD DEPTH. RISER SHALL BE 4" INCHES (100 MM) MINIMUM AND 7" INCHES (180 MM) MAXIMUM IN HEIGHT. TREADS SHALL BE 11" INCHES (280 MM) MINIMUM IN DEPTH.

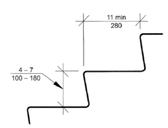

FIG. 504.2
TREADS AND RISERS FOR ACCESSIBLE STAIRWAYS

504.3 OPEN RISERS

OPEN RISERS SHALL NOT BE PERMITTED.

504.4 TREAD SURFACE

STAIR TREADS SHALL COMPLY WITH SECTION 302 AND SHALL HAVE A SLOPE NOT STEEPER THAN 1:48.

504.5 NOSINGS

THE RADIUS OF CURVATURE AT THE LEADING EDGE OF THE TREAD SHALL BE 1/2" INCH (13 MM) MAXIMUM. NOSINGS THAT PROJECT BEYOND RISERS SHALL HAVE THE UNDERSIDE OF THE LEADING EDGE CURVED OR BEVELED. RISERS SHALL BE PERMITTED TO SLOPE UNDER THE TREAD AT AN ANGLE OF 30 DEGREES MAXIMUM FROM VERTICAL. THE PERMITTED PROJECTION OF THE NOSING SHALL BE 1-1/2" INCH (38 MM) MAXIMUM OVER THE TREAD OR FLOOR BELOW.

504.6 HANDRAILS

STAIRS SHALL HAVE HANDRAILS COMPLYING WITH SECTION 505.

504.7 WET CONDITIONS

STAIR TREAD AND LANDINGS SUBJECT TO WET CONDITIONS SHALL BE DESIGNED TO PREVENT THE ACCUMULATION OF WATER.

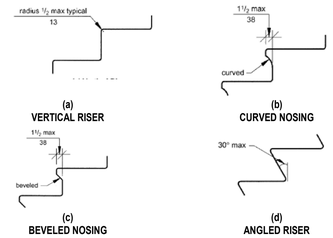

FIG. 504.5
STAIR NOSINGS

Section 505-Handrails

505.1 GENERAL

HANDRAILS REQUIRED BY SECTION 405.8 FOR RAMPS OR SECTION 504.6 FOR STAIRS, SHALL COMPLY WITH SECTION 505.

505.2 LOCATION

HANDRAILS SHALL BE PROVIDED ON BOTH SIDES OF STAIRS AND RAMPS.

EXCEPTION:

1. IN ASSEMBLY SEATING AREAS,HANDRAILS SHALL NOT BE REQUIRED ON BOTH SIDES ALONG AISLE STAIRS, PROVIDED WITH A HANDRAIL EITHER AT THE SIDE OR WITHIN THE AISLE.
2. IN ASSEMBLY SEATING AREAS, HANDRAILS SHALL NOT BE REQUIRED ON THE SIDES OF RAMPED AISLES SERVING SEATS.

505.3 CONTINUITY

HANDRAILS SHALL BE CONTINUOUS WITHIN THE FULL LENGTH OF EACH STAIR FLIGHT OR RAMP RUN. INSIDE HANDRAILS ON SWITCH BACK OR DOGLEG STAIRS OR RAMPS SHALL BE CONTINUOUS BETWEEN FLIGHTS OR RUNS. OTHER HANDRAILS SHALL COMPLY WITH SECTIONS 505.10 AND 307.

505.4 HEIGHT

TOP OF GRIPPING SURFACES OF HANDRAILS SHALL BE 34 INCHES (865 MM) MINIMUM AND 38 INCHES (965 MM) MAXIMUM VERTICALLY ABOVE STAIR NOSINGS AND RAMP SURFACES AND WALKING SURFACE. HANDRAILS SHALL BE AT A CONSISTENT HEIGHT ABOVE STAIR NOSINGS, RAMP SURFACES AND WALKING SURFACES.

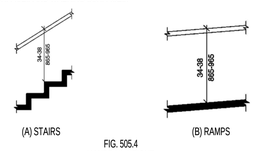

FIG. 505.4
HANDRAIL HEIGHT

505.5 CLEARANCE

CLEARANCE BETWEEN HANDRAIL GRIPPING SURFACE AND ADJACENT SURFACE WALL SHALL BE 1½ INCHES (38 MM) MINIMUM.

505.6 GRIPPING SURFACE

GRIPPING SURFACES SHALL BE CONTINUOUS, WITHOUT INTERRUPTION BY NEWEL POSTS, OTHER CONSTRUCTION ELEMENTS, OR OBSTRUCTIONS.

EXCEPTION:

1. HANDRAIL BRACKETS OR BALUSTERS ATTACHED TO THE BOTTOM SURFACE OF THE HANDRAIL SHALL NOT BE CONSIDERED OBSTRUCTIONS, PROVIDED THEY COMPLY WITH THE FOLLOWING CRITERIA:
   - A) NOT MORE THAN 20 PERCENT OF THE HANDRAIL LENGTH IS OBSTRUCTED,
   - B) HORIZONTAL PROJECTIONS BEYOND THE SIDES OF THE HANDRAIL OCCUR 1-1/2" INCHES (38 MM) MINIMUM BELOW THE BOTTOM OF THE HANDRAIL AND PROVIDED THAT FOR EACH 1/2" INCH (13 MM) OF ADDITIONAL HANDRAIL PERIMETER DIMENSION ABOVE 4 INCHES (100 MM), THE VERTICAL CLEARANCE DIMENSION OF 1-1/2" INCH (38 MM) CAN BE REDUCED BY 1/8" INCH (3.2 MM), AND
   - C) EDGES SHALL BE ROUNDED.

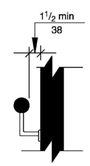

FIG. 505.5
HANDRAIL CLEARANCE

505.7 CROSS SECTION

HANDRAILS SHALL HAVE A CROSS SECTION COMPLYING WITH SECTION 505.7.1 OR 505.7.2.

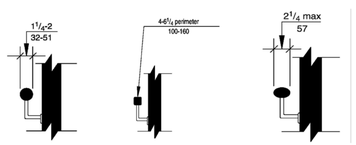

FIG. 505.7
HANDRAIL CROSS SECTION

505.7.1 CIRCULAR CROSS SECTIONS

HANDRAILS WITH A CIRCULAR CROSS SECTION SHALL HAVE AN OUTSIDE DIAMETER OF 1-1/4" INCHES (32 MM) MINIMUM AND 2 INCHES (51 MM) MAXIMUM.

505.7.2 NONCIRCULAR CROSS SECTIONS

HANDRAILS WITH A NONCIRCULAR CROSS SECTION SHALL HAVE A PERIMETER DIMENSION OF 4 INCHES (100 MM) MINIMUM AND 6-1/4" INCHES (160 MM) MAXIMUM, AND A CROSS-SECTION DIMENSION OF 2-1/4" INCHES (57 MM) MAXIMUM.

505.8 SURFACES

HANDRAILS, AND ANY WALL OR OTHER SURFACES ADJACENT TO THEM, SHALL BE FREE OF ANY SHARP OR ABRASIVE ELEMENTS. EDGES SHALL BE ROUNDED.

505.9 FITTING

HANDRAILS SHALL NOT ROTATE WITHIN THEIR FITTINGS.

505.10 HANDRAIL EXTENSIONS

HANDRAILS SHALL EXTEND BEYOND AND IN THE SAME DIRECTION OF STAIR FLIGHTS AND RAMP RUNS IN ACCORDANCE WITH SECTION 505.10.

EXCEPTION:

1. CONTINUOUS HANDRAILS AT THE INSIDE TURN OF STAIRS AND RAMPS.
2. EXTENSIONS ARE NOT REQUIRED FOR HANDRAILS IN AISLES SERVING SEATING WHERE THE HANDRAILS ARE DISCONTINUOUS TO PROVIDE ACCESS TO SEATING AND TO PERMIT CROSSOVERS WITHIN THE AISLE.

505.10.1 TOP AND BOTTOM EXTENSION AT RAMPS

RAMP HANDRAILS SHALL EXTEND HORIZONTALLY ABOVE THE LANDING 12" INCHES (305 MM) MINIMUM BEYOND THE TOP AND BOTTOM OF RAMP RUNS. EXTENSION SHALL RETURN TO A WALL, GUARD, OR FLOOR, OR SHALL BE CONTINUOUS TO THE HANDRAIL OF AN ADJACENT RAMP RUN.

505.10.2 TOP EXTENSION AT STAIRS

AT THE TOP OF A STAIR FLIGHT, HANDRAILS SHALL EXTEND HORIZONTALLY ABOVE THE LANDING FOR 12" INCHES (305 MM) MINIMUM BEGINNING DIRECTLY ABOVE THE LANDING NOSING. EXTENSIONS SHALL RETURN TO A WALL, GUARD, OR THE LANDING SURFACE, OR SHALL BE CONTINUOUS TO THE HANDRAIL OF AN ADJACENT STAIR FLIGHT.

505.10.3 BOTTOM EXTENSION AT STAIRS

AT THE BOTTOM OF A STAIR FLIGHT, HANDRAILS SHALL EXTEND AT THE SLOPE OF THE STAIR FLIGHT FOR A HORIZONTAL DISTANCE EQUAL TO ONE TREAD DEPTH BEYOND THE BOTTOM TREAD NOSING. EXTENSIONS SHALL RETURN TO A WALL, GUARD, OR THE LANDING SURFACE, OR SHALL BE CONTINUOUS TO THE HANDRAIL OF AN ADJACENT STAIR FLIGHT.

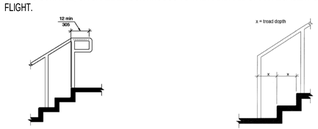

FIG. 505.10.2
TOP HANDRAIL EXTENSION AT STAIRS

FIG. 505.10.3
BOTTOM HANDRAIL EXTENSION AT STAIRS

SECTION 603-TOILET AND BATHING ROOMS

603.1 GENERAL

ACCESSIBLE TOILET AND BATHING ROOMS SHALL COMPLY WITH SECTION 603.

603.2 CLEARANCES

603.2.1 TURNING SPACE

A WHEELCHAIR TURNING SPACE COMPLYING WITH SECTION 304 SHALL BE PROVIDED WITHIN THE ROOM. THE REQUIRED TURNING SPACE SHALL NOT BE PROVIDED WITHIN A TOILET COMPARTMENT

603.2.2 DOOR SWING

CLEAR FLOOR OR GROUND SPACES, CLEARANCES AT FIXTURES, AND WHEELCHAIR TURNING SPACES SHALL NOT BE PERMITTED TO OVERLAP.

EXCEPTION:

1. DOORS TO A TOILET OR BATHING ROOM FOR A SINGLE OCCUPANT, ACCESSED ONLY THROUGH A PRIVATE OFFICE AND NOT FOR COMMON USE OR PUBLIC USE SHALL BE PERMITTED TO SWING INTO THE CLEAR FLOOR SPACE, PROVIDED THE SWING OF THE DOOR CAN BE REVERSED TO COMPLY WITH SECTION 603.2.2.
2. WHERE THE ROOM IS FOR INDIVIDUAL USE AND A CLEAR FLOOR OR GROUND SPACE COMPLYING WITH SECTION 305.3 IS PROVIDED WITHIN THE ROOM, BEYOND THE ARC OF THE DOOR SWING, THE DOOR SHALL NOT BE REQUIRED TO COMPLY WITH SECTION 603.2.2.

603.3 MIRRORS

WHERE MIRRORS ARE LOCATED ABOVE LAVATORIES, A MIRROR SHALL BE LOCATED OVER THE ACCESSIBLE LAVATORY AND SHALL BE MOUNTED WITH THE BOTTOM EDGE OF THE REFLECTING SURFACE 40" INCHES (1015 MM) MAXIMUM ABOVE THE FLOOR. WHERE MIRRORS ARE LOCATED ABOVE COUNTERS THAT DO NOT CONTAIN LAVATORIES, THE MIRROR SHALL BE MOUNTED WITH THE BOTTOM EDGE OF THE REFLECTING SURFACE 40" INCHES (1015 MM) MAXIMUM ABOVE THE FLOOR.

603.4 COAT HOOKS AND SHELVES

COAT HOOKS SHALL BE LOCATED WITHIN ONE OF THE REACH RANGES SPECIFIED IN SECTION 308. SHELVES SHALL BE 40" INCHES (1015 MM) MINIMUM AND 48" INCHES (1220 MM) MAXIMUM ABOVE THE FLOOR.

SECTION 604- Water Closets and Toilet Compartments

604.1 GENERAL

ACCESSIBLE WATER CLOSETS AND TOILET COMPARTMENTS SHALL COMPLY WITH SECTION 604. COMPARTMENTS CONTAINING MORE THAN ONE PLUMBING FIXTURE SHALL COMPLY WITH SECTION 603. WHEELCHAIR ACCESSIBLE COMPARTMENTS SHALL COMPLY WITH SECTION 604.9. AMBULATORY ACCESSIBLE COMPARTMENTS SHALL COMPLY WITH SECTION 604.10.

604.2 LOCATION

THE WATER CLOSET SHALL BE LOCATED WITH A WALL OR PARTITION TO THE REAR AND TO ONE SIDE. THE CENTERLINE OF THE WATER CLOSET SHALL BE 16" INCHES (405 MM) MINIMUM TO 18" INCHES (455 MM) MAXIMUM FROM THE SIDE WALL OR PARTITION. WATER CLOSETS LOCATED IN AMBULATORY ACCESSIBLE COMPARTMENTS SPECIFIED IN SECTION 604.10 SHALL HAVE THE CENTERLINE OF THE WATER CLOSET 17" INCHES (430 MM) MINIMUM TO 19" INCHES (485 MM) MAXIMUM FROM THE SIDE WALL OR PARTITION.

604.3.1 CLEARANCE WIDTH

CLEARANCE AROUND A WATER CLOSET SHALL BE 60" INCHES (1525 MM) MINIMUM IN WIDTH, MEASURED PERPENDICULAR FROM THE SIDEWALL.

604.3.2 CLEARANCE DEPTH

CLEARANCE AROUND THE WATER CLOSET SHALL BE 56" INCHES (1420 MM) MINIMUM IN DEPTH, MEASURED PERPENDICULAR FROM THE REAR WALL.

604.3.3 CLEARANCE OVERLAP

THE REQUIRED CLEARANCE AROUND THE WATER CLOSET SHALL BE PERMITTED TO OVERLAP THE WATER CLOSET, ASSOCIATED GRAB BARS, PAPER DISPENSERS, SANITARY NAPKIN RECEPTACLES, COAT HOOKS, SHELVES, ACCESSIBLE ROUTES, CLEAR FLOOR SPACE AT OTHER FIXTURES AND THE TURNING SPACE. NO OTHER FIXTURES OR OBSTRUCTIONS SHALL BE WITHIN THE REQUIRED WATER CLOSET CLEARANCE.

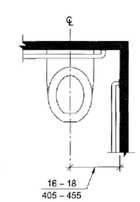

FIG. 604.2
WATER CLOSET LOCATION

604.4 HEIGHT

THE HEIGHT OF WATER CLOSET SEATS SHALL BE 17" INCHES (430 MM) MINIMUM AND 19" INCHES (485 MM) MAXIMUM ABOVE THE FLOOR, MEASURED TO THE TOP OF THE SEAT. SEATS SHALL NOT BE SPRUNG TO RETURN TO A LIFTED POSITION.

604.5 GRAB BARS

GRAB BARS FOR WATER CLOSETS SHALL COMPLY WITH SECTION 609 AND SHALL BE PROVIDED IN ACCORDANCE WITH SECTIONS 604.5.1 AND 604.5.2. GRAB BARS SHALL BE PROVIDED ON THE REAR WALL AND ON THE SIDE WALL CLOSEST TO THE WATER CLOSET.

EXCEPTION:

GRAB BARS ARE NOT REQUIRED TO BE INSTALLED IN A TOILET ROOM FOR A SINGLE OCCUPANT, ACCESSED ONLY THROUGH A PRIVATE OFFICE AND NOT FOR COMMON USE OR PUBLIC USE, PROVIDED REINFORCEMENT HAS BEEN INSTALLED IN WALLS AND LOCATED SO AS TO PERMIT THE INSTALLATION OF GRAB BARS COMPLYING WITH SECTION 604.5

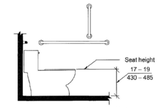

FIG. 604.4
WATER CLOSET SEAT HEIGHT

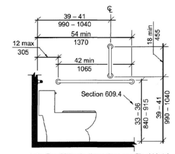

FIG. 604.5.1
SIDE WALL GRAB BAR FOR WATER CLOSET

604.4.5.1 FIXED SIDE WALL GRAB BARS

FIXED SIDEWALK GRAB BARS SHALL BE 42" INCHES (1065 MM) MINIMUM IN LENGTH, LOCATED 12" INCHES (305 MM) MAXIMUM FROM THE REAR WALL AND EXTENDING 54" INCHES (1370 MM) MINIMUM FROM THE REAR WALL. IN ADDITION, A VERTICAL GRAB BAR 18" INCHES (455 MM) MINIMUM IN LENGTH SHALL BE MOUNTED WITH THE BOTTOM OF THE BAR LOCATED BETWEEN 39" INCHES (990 MM) AND 41" INCHES (1040 MM) ABOVE THE FLOOR, AND WITH THE CENTER LINE OF THE BAR LOCATED BETWEEN 39" INCHES (990 MM) AND 41" INCHES (1040 MM) FROM THE REAR WALL.

604.4.5.2 REAR WALL GRAB BAR

THE REAR WALL GRAB SHALL BE 36" INCHES (915 MM) MINIMUM IN LENGTH, AND EXTEND FROM THE CENTERLINE OF THE WATER CLOSET 12" INCHES (305 MM) MINIMUM ON THE SIDE CLOSEST TO THE WALL, AND 24" INCHES (610 MM) MINIMUM ON THE TRANSFER SIDE.

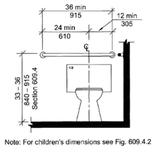

FIG. 604.5.2
REAR WALL GRAB BAR FOR WATER CLOSET

604.6 FLUSH CONTROLS

FLUSH CONTROLS SHALL BE HAND OPERATED OR AUTOMATIC. HAND-OPERATED FLUSH CONTROLS SHALL COMPLY WITH SECTION 309. FLUSH CONTROLS SHALL BE LOCATED ON THE OPEN SIDE OF THE WATER CLOSET.

604.7 DISPENSERS

TOILET PAPER DISPENSERS SHALL COMPLY WITH SECTION 309.4. WHERE THE DISPENSER IS LOCATED ABOVE THE GRAB BAR, THE OUTLET OF THE DISPENSER SHALL BE LOCATED WITHIN AN AREA 24" INCHES MINIMUM AND 36" INCHES MAXIMUM FROM THE REAR WALL. WHERE THE DISPENSER IS LOCATED BELOW THE GRAB BAR, THE OUTLET OF THE DISPENSER SHALL BE LOCATED WITHIN AN AREA 24" INCHES MINIMUM AND 42" INCHES MAXIMUM FROM THE REAR WALL. THE OUTLET OF THE DISPENSER SHALL BE LOCATED 18" INCHES MINIMUM AND 48" INCHES MAXIMUM ABOVE THE FLOOR. DISPENSERS SHALL NOT BE OF A TYPE THAT CONTROL DELIVERY OR DO NOT ALLOW CONTINUOUS PAPER FLOW.

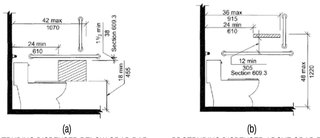

(a)
PROTRUDING DISPENSER BELOW GRAB BAR

(b)
PROTRUDING DISPENSER ABOVE GRAB BAR

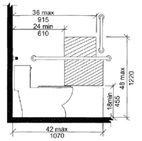

(c)
RECESSED DISPENSER

NOTE:
For children's dimensions see Fig. 604.11.7 dispenser outlet location

FIG. 604.7
DISPENSER OUTLET LOCATION

604.8 COAT HOOKS AND SHELVES

COAT HOOKS PROVIDED WITHIN TOILET COMPARTMENTS SHALL BE 48" INCHES (1220 MM) MAXIMUM ABOVE THE FLOOR. SHELVES SHALL BE 40" INCHES (1015 MM) MINIMUM AND 48" INCHES (1220 MM) MAXIMUM ABOVE THE FLOOR.

604.9 WHEELCHAIR ACCESSIBLE COMPARTMENT

ACCESSIBLE TOILET AND BATHING ROOMS SHALL COMPLY WITH SECTION 603.

604.9.2 SIZE

TOILET COMPARTMENTS SHALL COMPLY WITH SECTION 604.9.2.1 OR 604.9.2.2 AS APPLICABLE.

604.9.2.1 MINIMUM AREA

THE MINIMUM AREA OF A WHEELCHAIR ACCESSIBLE COMPARTMENT SHALL BE 60" INCHES (1525 MM) MINIMUM IN WIDTH MEASURED PERPENDICULAR TO THE SIDE WALL AND 56" INCHES (1420 MM) MINIMUM IN DEPTH FOR WALL HUNG WATER CLOSETS AND 59" (1500 MM) MINIMUM IN DEPTH FOR FLOOR MOUNTED WATER CLOSETS MEASURED PERPENDICULAR TO THE REAR WALL.

604.9.2.2 COMPARTMENT FOR CHILDREN'S USE

THE MINIMUM AREA OF A WHEELCHAIR ACCESSIBLE COMPARTMENT PRIMARILY FOR CHILDREN'S USE SHALL BE 60" INCHES (1525 MM) MINIMUM IN WIDTH MEASURED PERPENDICULAR TO THE SIDE WALL, AND 59" INCHES (1500 MM) MINIMUM IN DEPTH FOR WALL HUNG AND FLOOR MOUNTED WATER CLOSERS MEASURED PERPENDICULAR TO THE REAR WALL.

604.9.2.3 DOORS

TOILET COMPARTMENT DOORS SHALL BE 42" INCHES (1065 MM) MINIMUM FOR DOOR CLEARANCE BETWEEN THE DOOR SIDE OF THE STALL AND ANY OBSTRUCTIONS. THE DOOR SHALL BE SELF-CLOSING. AND SHALL NOT SWING INTO THE REQUIRED MINIMUM AREA.

H 2 M architects + engineers

538 Broad Hollow Road, 4th Floor East
Melville, NY 11747
631.756.8000 • www.h2m.com

CONSULTANTS:

MARK	DATE	DESCRIPTION

REGISTERED ARCHITECT ROBERT BEE 032389 STATE OF NEW YORK

*ALTERATION OF THIS DOCUMENT EXCEPT BY A LICENSED PROFESSIONAL IS ILLEGAL.

DESIGNED BY:	DRAWN BY:	CHECKED BY:	REVIEWED BY:
KEM	JHG		

PROJECT No:	DATE:	SCALE:
VGFD2001	JULY 2022	AS SHOWN

CLIENT

VAILS GATE FIRE DISTRICT

New Storage Building (Phase I)
New Fire Station (Phase II)

872 Blooming Grove Turnpike
New Windsor, NY 12553

CONTRACT

CONTRACT G
GENERAL CONSTRUCTUIR

STATUS

FINAL BID DOCUMENT

SHEET TITLE

ARCHITECTURE
GENERAL ACCESSIBILITY REQUIREMENTS
PHASE 1 & PHASE 2

DRAWING No.

G 004.00

C:\Users\jguzman\Documents\VGFD2001_Central21_A_jguzman.rvt

7/18/2022 8:23:13 AM

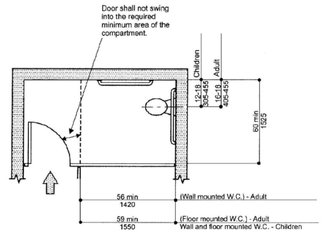

FIG. 604.9.3.1 (c)
WHEELCHAIR ACCESSIBLE COMPARTMENT DOOR OPENINGS - ALTERNATE

604.9.3.1 DOOR OPENING LOCATION

THE FARTHEST EDGE OF TOILET COMPARTMENT DOOR OPENING SHALL BE LOCATED IN THE FRONT WALL OR PARTITION OR IN THE SIDE WALL OR PARTITION AS REQUIRED BY TABLE 604.9.3.1

604.9.4 APPROACH

WHEELCHAIR ACCESSIBLE COMPARTMENTS SHALL BE ARRANGED FOR LEFT HAND OR RIGHT-HAND APPROACH TO THE WATER CLOSET.

604.9.6 GRAB BARS

GRAB BARS SHALL COMPLY WITH SECTION 609. SIDE WALL GRAB BARS COMPLYING WITH SECTION 604.5.1 LOCATED ON THE WALL CLOSEST TO THE WATER CLOSET, AND A REAR WALL GRAB BAR COMPLYING WITH SECTION 604.5.2, SHALL BE PROVIDED.

604.10 AMBULATORY ACCESSIBLE COMPARTMENTS

604.10.2 SIZE

THE MINIMUM AREA OF AN AMBULATORY ACCESSIBLE COMPARTMENT SHALL BE 60" INCHES (1525 MM) MINIMUM IN DEPTH AND 36" INCHES (915 MM) IN WIDTH.

604.10.4 GRAB BARS

GRAB BARS SHALL COMPLY WITH SECTION 609. SIDE WALL GRAB BARS COMPLYING WITH SECTION 604.5.1 SHALL BE PROVIDED ON BOTH SIDES OF THE COMPARTMENT.

604.11 WATER CLOSETS AND TOILET COMPARTMENTS FOR CHILDREN'S USE

604.11.4 HEIGHT

THE HEIGHT OF WATER CLOSET SEARS PRIMARILY FOR CHILDREN'S USE SHALL BE 11" INCHES (280 MM) MINIMUM AND 17" INCHES (430 MM) MAXIMUM ABOVE THE FLOOR, MEASURED TO THE TOP OF THE SEAT.

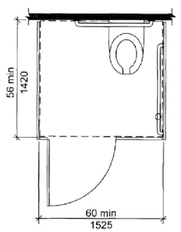

(a)
WALL-HUNG WATER CLOSET - ADULT

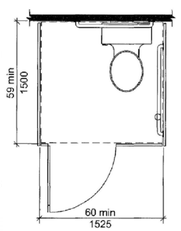

(b)
FLOOR-MOUNTED WATER CLOSET - ADULT WALL-HUNG AND CHILDREN
FIG. 604.9.2
WHEELCHAIR ACCESSIBLE TOILET COMPARTMENTS

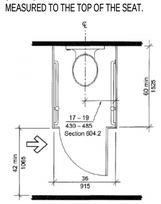

FIG. 604.10
AMBULATORY ACCESSIBLE COMPARTMENTS

604.11.7 DISPENSERS

TOILET PAPER DISPENSERS PRIMARILY FOR CHILDREN'S USE SHALL COMPLY WITH SECTION 309.4. THE OUTLET OF DISPENSERS SHALL BE LOCATED WITHIN AN AREA 24" INCHES (610 MM) MINIMUM AND 42" INCHES (1065 MM) MAXIMUM FROM THE REAR WALL. THE OUTLET OF THE DISPENSER SHALL BE 14" INCHES (355 MM) MINIMUM AND 19" INCHES (485 MM) MAXIMUM ABOVE THE FLOOR. THERE SHALL BE A CLEARANCE OF 1-1/2" INCHES (38 MM) MINIMUM BELOW THE GRAB BAR.

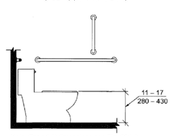

Note: For adult dimensions see Fig. 604.4

FIG. 604.11.4
CHILDREN'S WATER CLOSET HEIGHT

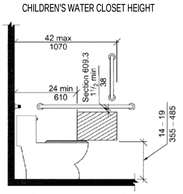

Note: For adult dimensions see Fig. 604.7

FIG. 604.11.7
CHILDREN'S DISPENSER OUTLET LOCATION

SECTION 605- Urinals

605.2 HEIGHT AND DEPTH

URINALS SHALL BE OF THE STALL TYPE OR SHALL BE OF THE WALL HUNG TYPE WITH THE RIM AT 17" INCHES (430 MM) MAXIMUM ABOVE THE FLOOR. WALL HUNG URINALS SHALL BE 13-1/2" INCHES (345 MM) MINIMUM IN DEPTH MEASURED FROM THE OUTER FACE OF THE URINAL RIM TO THE WALL.

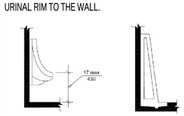

(a)
WALL-HUNG TYPE

(b)
STALL TYPE

FIG. 605.2
HEIGHT OF URINALS

605.3 CLEAR FLOOR SPACE

A CLEAR FLOOR SPACE COMPLYING WITH SECTION 305, POSITIONED FOR FORWARD APPROACH, SHALL BE PROVIDED.

605.4 FLUSH CONTROLS

FLUSH CONTROLS SHALL BE HAND OPERATED OR AUTOMATIC. HAND OPERATED FLUSH CONTROLS SHALL COMPLY WITH SECTION 309.

SECTION 606- Lavatories and Sinks

606.1 GENERAL

ACCESSIBLE LAVATORIES AND SINKS SHALL COMPLY WITH SECTION 606.

606.2 CLEAR FLOOR OR GROUND SPACE

A CLEAR FLOOR OR GROUND SPACE COMPLYING WITH SECTION 305.3, POSITIONED FOR FORWARD APPROACH, SHALL BE PROVIDED. KNEE AND TOE CLEARANCE COMPLYING WITH SECTION 306 SHALL BE PROVIDED. THE DIP OF THE OVER-FLOW SHALL NOT BE CONSIDERED IN DETERMINING KNEE AND TOE CLEARANCES

EXCEPTIONS:

1. A PARALLEL APPROACH COMPLYING WITH SECTION 305 AND CENTERED ON THE SINK SHALL BE PERMITTED TO A KITCHEN SINK IN A SPACE WHERE A COOK TOP OR CONVENTIONAL RANGE IS NOT PROVIDED.
2. THE REQUIREMENT FOR KNEE AND TOE CLEARANCE SHALL NOT APPLY TO A LAVATORY IN A TOILET OR BATHING FACILITY FOR A SINGLE OCCUPANT, ACCESSED ONLY THROUGH A PRIVATE OFFICE AND NOT FOR COMMON USE OR PUBLIC USE.

606.3 HEIGHT

THE FRONT OF LAVATORIES AND SINKS SHALL BE 34" INCHES (865 MM) MAXIMUM ABOVE THE FLOOR OR GROUND, MEASURED TO THE HIGHER OF THE FIXTURE RIM OR COUNTER SURFACE.

EXCEPTIONS:

A LAVATORY IN A TOILET OR BATHING FACILITY FOR A SINGLE OCCUPANT, ACCESSED ONLY THROUGH A PRIVATE OFFICE AND NOT FOR COMMON USE OR PUBLIC USE SHALL NOT BE REQUIRED TO COMPLY WITH 606.3.

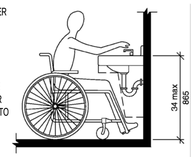

FIG. 606.3
HEIGHT OF LAVATORIES AND SINKS

606.4 FAUCETS

FAUCETS SHALL COMPLY WITH SECTION 309. HAND-OPERATED, SELF-CLOSING FAUCETS SHALL REMAIN OPEN FOR 10 SECONDS MINIMUM.

606.5 LAVATORIES WITH ENHANCED REACH RANGE

WHEN ENHANCED REACH RANGE IS REQUIRED AT LAVATORIES, FAUCETS AND SOAP DISPENSER CONTROLS SHALL HAVE A REACH DEPTH OF 11" INCHES (280 MM) MAXIMUM OR, IF AUTOMATIC, SHALL BE ACTIVATED WITHIN A REACH DEPTH OF 11" INCHES (280 MM) MAXIMUM. WATER AND SOAP FLOW SHALL BE PROVIDED WITH A REACH DEPTH OF 11" INCHES (280 MM) MAXIMUM.

606.6 EXPOSED PIPES AND SURFACES

WATER SUPPLY AND DRAIN PIPES UNDER LAVATORIES AND SINKS SHALL BE INSULATED OR OTHERWISE CONFIGURED TO PROTECT AGAINST CONTACT. THERE SHALL BE NO SHARP OR ABRASIVE SURFACES UNDER LAVATORIES AND SINKS

SECTION 607- Bathtubs

607.1 GENERAL

ACCESSIBLE BATHTUBS SHALL COMPLY WITH SECTION 607.

607.2 CLEARANCE

A CLEARANCE IN FRONT OF BATHTUBS EXTENDING THE LENGTH OF THE BATHTUB AND 30" INCHES (760 MM) MINIMUM IN DEPTH SHALL BE PROVIDED. WHERE A PERMANENT SEAR IS PROVIDED AT THE HEAD END OF THE BATHTUB, THE CLEARANCE SHALL EXTEND 12" INCHES (305 MM) MINIMUM BEYOND THE WALL AT THE HEAD END OF THE BATHTUB.

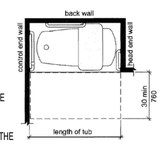

(a)
WITHOUT PERMANENT SEAT

607.3 SEAT

A PERMANENT SEAT AT THE HEAD END OF THE BATHTUB OR A REMOVABLE IN-TUB SEAT SHALL BE PROVIDED. SEATS SHALL COMPLY WITH SECTION 610.

607.4 GRAB BARS

GRAB BARS SHALL COMPLY WITH SECTION 609 AND SHALL BE PROVIDED IN ACCORDANCE WITH SECTION 607.4.1 OR 607.4.2.

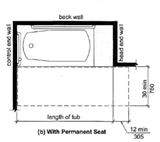

(a)
WITHOUT PERMANENT SEAT
FIG. 607.2
CLEARANCE FOR BATHTUBS

EXCEPTIONS:

GRAB BARS SHALL NOT BE REQUIRED TO BE INSTALLED IN A BATHING FACILITY FOR A SINGLE OCCUPANT ACCESSED ONLY THROUGH A PRIVATE OFFICE AND NOT FOR COMMON USE OR PUBLIC USE, PROVIDED REINFORCEMENT HAS BEEN INSTALLED IN WALLS AND LOCATED SO AS TO PERMIT THE INSTALLATION OF GRAB BARS COMPLYING WITH SECTION 607.4.

607.4.1 BATHTUBS WITH PERMANENT SEAT

FOR BATHTUBS WITH PERMANENT SEATS, GRAB BARS COMPLYING WITH SECTION 607.4.1 SHALL BE PROVIDED.

607.4.1.1 BACK WALL

TWO HORIZONTAL GRAB BARS SHALL BE PROVIDED ON THE BACK WALL, ONE COMPLYING WITH SECTION 609.4 AND THE OTHER LOCATED 8" INCHES (205 MM) MINIMUM AND 10" INCHES (255 MM) MAXIMUM ABOVE THE RIM OF THE BATHTUB. EACH GRAB BAR SHALL BE LOCATED 15" INCHES (380 MM) MAXIMUM FROM THE HEAD END WALL AND EXTEND TO 12" INCHES (305 MM) MAXIMUM FROM THE CONTROL END WALL.

607.4.1.2 CONTROL END WALL

CONTROL END WALL GRAB BARS SHALL COMPLY WITH SECTION 607.4.1.2.

EXCEPTIONS:

AN "L" SHAPED CONTINUOUS GRAB BAR OF EQUIVALENT DIMENSIONS AND POSITIONING SHALL BE PERMITTED TO SERVE THE FUNCTION OF SEPARATE VERTICAL AND HORIZONTAL GRAB BARS.

607.4.1.2.1 HORIZONTAL GRAB BAR

A HORIZONTAL GRAB BAR 24" INCHES (610 MM) MINIMUM IN LENGTH SHALL BE PROVIDED ON THE CONTROL END WALL BEGINNING NEAR THE FRONT EDGE OF THE BATHTUB AND EXTENDING TOWARD THE INSIDE CORNER OF THE BATHTUB.

607.4.1.2.2 VERTICAL GRAB BAR

A VERTICAL GRAB BAR 18" INCHES (455 MM) MINIMUM IN LENGTH SHALL BE PROVIDED ON THE CONTROL END WALL 3" INCHES (75 MM) MINIMUM AND 6" INCHES (150 MM) MAXIMUM ABOVE THE HORIZONTAL GRAB BAR AND 4" INCHES (100 MM) MAXIMUM INWARD FROM THE FRONT EDGE OF THE BATHTUB.

607.4.2 BATHTUBS WITHOUT PERMANENT SEAT

FOR BATHTUBS WITHOUT PERMANENT SEATS, GRAB BARS COMPLYING WITH SECTION 607.4.2 SHALL BE PROVIDED.

607.4.2.1 BACK WALL

TWO HORIZONTAL GRAB BARS SHALL BE PROVIDED ON THE BACK WALL, ONE COMPLYING WITH SECTION 609.4 AND THE OTHER LOCATED 8" INCHES (205 MM) MINIMUM AND 10" INCHES (255 MM) MAXIMUM ABOVE THE RIM OF THE BATHTUB. EACH GRAB BAR SHALL BE LOCATED 24" INCHES (610 MM) MAXIMUM IN LENGTH, LOCATED 24" INCHES (610 MM) MAXIMUM FROM THE HEAD END WALL AND EXTEND TO 12" INCHES (305 MM) MAXIMUM FROM THE CONTROL END WALL.

607.4.2.2 CONTROL END WALL

CONTROL END WALL GRAB BARS SHALL COMPLY WITH SECTION 607.4.1.2.

607.4.2.3 HEAD END WALL

A HORIZONTAL GRAB BAR 12" INCHES (305 MM) MINIMUM IN LENGTH SHALL BE PROVIDED ON THE HEAD END WALL AT THE FRONT EDGE OF THE BATHTUB.

607.5 CONTROLS

CONTROLS, OTHER THAN DRAIN STOPPERS, SHALL BE PROVIDED ON AN END WALL, LOCATED BETWEEN THE BATHTUB RIM AND GRAB BAR, AND BETWEEN THE OPEN SIDE OF THE BATHTUB AND THE CENTERLINE OF THE WIDTH OF THE BATHTUB. CONTROLS SHALL COMPLY WITH SECTION 309.4.

607.6 HAND SHOWER

A HAND SHOWER WITH A HOSE 59" INCHES (1500 MM) MINIMUM IN LENGTH, THAT CAN BE USED AS BOTH A FIXED SHOWER HEAD AND AS A HAND SHOWER, SHALL BE PROVIDED. THE HAND SHOWER SHALL HAVE A CONTROL WITH NONPOSITIVE SHUT-OFF FEATURE. WHERE PROVIDED, AN ADJUSTABLE-HEIGHT HAND SHOWER MOUNTED ON A VERTICAL BAD SHALL BE INSTALLED SO AS TO NOT OBSTRUCT THE USE OF GRAB BARS.

607.6 HAND SHOWER

A HAND SHOWER WITH A HOSE 59" INCHES (1500 MM) MINIMUM IN LENGTH, THAT CAN BE USED AS BOTH A FIXED SHOWER HEAD AND AS A HAND SHOWER, SHALL BE PROVIDED. THE HAND SHOWER SHALL HAVE A CONTROL WITH NONPOSITIVE SHUT-OFF FEATURE. WHERE PROVIDED, AN ADJUSTABLE-HEIGHT HAND SHOWER MOUNTED ON A VERTICAL BAD SHALL BE INSTALLED SO AS TO NOT OBSTRUCT THE USE OF GRAB BARS.

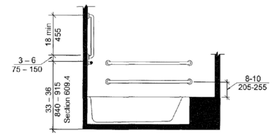

(a)
ELEVATOR

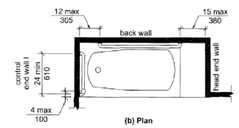

(b)
PLAN
FIG. 607.4.1
GRAB BARS FOR BATHTUBS WITH PERMANENT SEATS

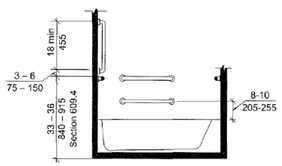

(a)
ELEVATION

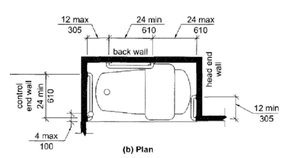

(b)
PLAN
FIG. 607.4.2
GRAB BARS FOR BATHTUBS WITHOUT PERMANENT SEATS

SECTION 608- Shower Compartments

608.1 GENERAL

ACCESSIBLE SHOWER COMPARTMENTS SHALL COMPLY WITH SECTION 608.

608.2.1 TRANSFER-TYPE SHOWER COMPARTMENTS

TRANSFER-TYPE SHOWER COMPARTMENTS SHALL COMPLY WITH SECTION 608.2.1.

608.2.1.1 SIZE

TRANSFER-TYPE SHOWER COMPARTMENT SHALL HAVE A CLEAR INSIDE DIMENSION OF 36" INCHES (915 MM) IN WIDTH AND 36" INCHES (915 MM) IN DEPTH, MEASURED AT THE CENTER POINT OF OPPOSING SIDES. AND ENTRY 36" INCHES (915 MM) MINIMUM IN WIDTH SHALL BE PROVIDED.

608.2.1.2 CLEARANCE

A CLEARANCE OF 48" INCHES (1220 MM) MINIMUM IN LENGTH MEASURED PERPENDICULAR FROM THE CONTROL WALL AND 36" INCHES (915 MM) MINIMUM IN DEPTH SHALL BE PROVIDED ADJACENT TO THE OPEN FACE OF THE COMPARTMENT.

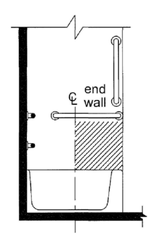

FIG. 607.5
LOCATION OF BATHTUB CONTROLS

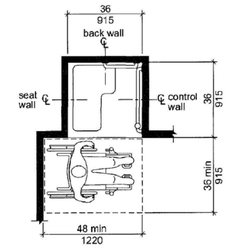

Note: inside finished dimensions measured at the center points of opposing sides

FIG. 608.2.1
TRANSFER-TYPE SHOWER COMPARTMENT SIZE AND CLEARANCE

608.2.2 STANDARD ROLL-IN TYPE SHOWER COMPARTMENTS

STANDARD ROLL-IN TYPE SHOWER COMPARTMENTS SHALL SHALL COMPLY WITH SECTION 608.2.2.

608.2.2.1 SIZE

STANDARD ROLL-IN-TYPE SHOWER COMPARTMENT SHALL HAVE A CLEAR INSIDE DIMENSION OF 60" INCHES (1525 MM) MINIMUM IN WIDTH AND 30" INCHES (760 MM) MINIMUM IN DEPTH, MEASURED AT THE CENTER POINT OF OPPOSING SIDES. AN ENTRY 60" INCHES (1525 MM) MINIMUM IN WIDTH SHALL BE PROVIDED.

608.2.2.2 CLEARANCE

A CLEARANCE OF 60" INCHES (1525 MM) MINIMUM IN LENGTH ADJACENT TO THE 60" INCH (1525 MM) WIDTH OF THE OPEN FACE OF THE SHOWER COMPARTMENT, AND 30" INCHES (760 MM) MINIMUM IN DEPTH, SHALL BE PROVIDED.

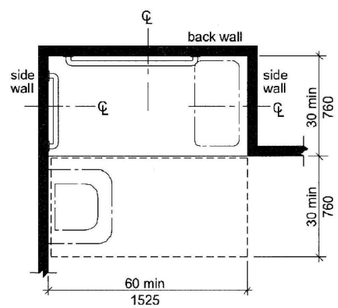

Note: inside finished dimensions measured at the center points of opposing sides

FIG. 608.2.2
STANDARD ROLL-IN-TYPE SHOWER COMPARTMENT SIZE AND CLEARANCE

608.3 GRAB BARS

GRAB BARS SHALL COMPLY WITH SECTION 609 AND SHALL BE PROVIDED IN ACCORDANCE WITH SECTION 608.3. WHERE MULTIPLE GRAB BARS ARE USED, REQUIRED HORIZONTAL GRAB BARS SHALL BE INSTALLED AT THE SAME HEIGHT ABOVE THE FLOOR.

608.3.1.1 HORIZONTAL GRAB BAR

HORIZONTAL GRAB BARS SHALL BE PROVIDED ACROSS THE CONTROL WALL AND ON THE BACK WALL TO A POINT 18 INCHES (455 MM) FROM THE CONTROL WALL.

608.3.1.2 VERTICAL GRAB BAR

A VERTICAL GRAB BAR 18 INCHES (455 MM) MINIMUM IN LENGTH BE PROVIDED ON THE CONTROL END WALL 3 INCHES (75 MM) MINIMUM AND 6 INCHES (150 MM) MAXIMUM ABOVE THE HORIZONTAL GRAB BAR, AND 4 INCHES (100 MM) MAXIMUM INWARD FROM THE FRONT EDGE OF THE SHOWER.

SECTION 609 - GRAB BARS

609.1 GENERAL

GRAB BARS IN ACCESSIBLE TOILET OR BATHING FACILITIES SHALL COMPLY WITH SECTION 609.

609.2 CROSS SECTION

GRAB BARS SHALL HAVE A CROSS SECTION COMPLYING WITH SECTION 609.2.1 OR 609.2.2.

609.2.1 CIRCULAR CROSS SECTION

GRAB BARS WITH A CIRCULAR CROSS SECTION SHALL HAVE AN OUTSIDE DIAMETER OF 1-1/4" INCH (32 MM) MINIMUM AND 2" INCHES (51 MM) MAXIMUM.

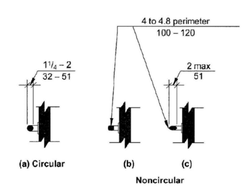

FIG. 609.2
SIZE OF GRAB BARS

609.2.2 NONCIRCULAR CROSS SECTION

GRAB BARS WITH A NON CIRCULAR CROSS SECTION SHALL HAVE A CROSS SECTION DIMENSION OF 2" INCHES (51 MM) MAXIMUM, AND A PERIMETER DIMENSION OF 4" INCHES (102 MM) MINIMUM AND 4.8" INCHES (122 MM) MAXIMUM.

609.3 SPACING

THE SPACE BETWEEN THE WALL AND THE GRAB BAR SHALL BE 1-1/2" INCHES (38 MM). THE SPACE BETWEEN THE GRAB BAR AND PROJECTING OBJECTS BELOW AND AT THE ENDS OF THE GRAB BAR SHALL BE 1-1/2" INCHES (38 MM) MINIMUM. THE SPACE BETWEEN THE GRAB BAR AND PROJECTING OBJECTS ABOVE THE GRAB BAR SHALL BE 12" INCHES (305 MM) MINIMUM.

EXCEPTIONS:

1. THE SPACE BETWEEN THE GRAB BARS AND SHOWER CONTROLS, SHOWER FITTINGS, AND OTHER GRAB BARS ABOVE THE GRAB BAR SHALL BE PERMITTED TO BE 1-1/2" INCHES (38 MM) MINIMUM.
2. RECESSED DISPENSERS PROJECTING FROM THE WALL 1/4" INCH (6.4 MM) MAXIMUM MEASURED FROM THE FACE OF THE DISPENSER AND COMPLYING WITH SECTION 604.7 SHALL BE PERMITTED WITHIN THE 12" INCH (305 MM) SPACE ABOVE AND THE 1-1/2" INCH (38 MM) SPACES BELOW AND AT THE ENDS OF THE GRAB BAR.

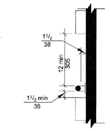

FIG. 609.3
SPACING OF GRAB BARS

609.4.1 POSITION OF GRAB BARS - GENERAL

GRAB BARS SHALL BE INSTALLED IN A HORIZONTAL POSITION, 33" INCHES (840 MM) MINIMUM AND 36" INCHES (915 MM) MAXIMUM ABOVE THE FLOOR MEASURED TO THE TOP OF THE GRIPPING SURFACE OR SHALL BE INSTALLED AS REQUIRED BY ITEMS 1 THROUGH 3.

EXCEPTIONS:

1. THE LOWER GRAB BAR ON THE BACK WALL OF THE BATHTUB SHALL COMPLY WITH SECTION 607.4.1.1 OR 607.4.2.1.
2. VERTICAL GRAB BARS SHALL COMPLY WITH SECTIONS 604.5.1, 607.4.1.2.2, 607.4.2.2 AND 608.3.1.2.
3. GRAB BARS AT WATER CLOSETS PRIMARILY FOR CHILDREN'S USE SHALL COMPLY WITH SECTIONS 609.4.2.

609.4.1 POSITION OF CHILDREN'S GRAB BARS

AT WATER CLOSETS PRIMARILY FOR CHILDREN'S USE COMPLYING WITH SECTION 604.11, GRAB BARS SHALL BE INSTALLED IN A HORIZONTAL POSITION 18" INCHES (455 MM) MINIMUM AND 27" INCHES (685 MM) MAXIMUM ABOVE THE FLOOR MEASURED TO THE TOP OF THE GRIPPING SURFACE. A VERTICAL GRAB BAR SHALL BE MOUNTED WITH THE BOTTOM OF THE BAR LOCATED BETWEEN 21" INCHES (535 MM) MINIMUM AND 30 " INCHES (760 MM) MAXIMUM ABOVE THE FLOOR AND WITH THE CENTERLINE OF THE BAR LOCATED BETWEEN 34" INCHES (865 MM) MINIMUM AND 36" INCHES (915 MM) MAXIMUM FROM THE REAR WALL.

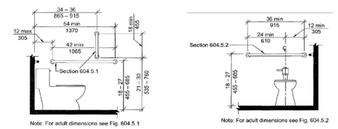

(a)
SIDE WALL VIEW

(b)
REAR WALL VIEW

FIG. 609.4.2
POSITION OF CHILDREN'S GRAB BARS

609.5 SURFACE HAZARDS

GRAB BARS, AND ANY WALL OR OTHER SURFACES ADJACENT TO GRAB BARS, SHALL BE FREE OF SHARP OR ABRASIVE ELEMENTS. EDGES SHALL BE ROUNDED.

609.6 FITTINGS

GRAB BARS SHALL NOT ROTATE WITHIN THEIR FITTINGS.

609.7 INSTALLATION AND CONFIGURATION

GRAB BARS SHALL BE INSTALLED IN ANY MANNER THAT PROVIDES A GRIPPING SURFACE AT THE LOCATIONS SPECIFIED IN THIS STANDARD AND THAT DOES NOT OBSTRUCT THE CLEAR FLOOR SPACE. HORIZONTAL AND VERTICAL GRAB BARS SHALL BE PERMITTED TO BE SEPARATE BARS, A SINGLE PIECE BAR OR COMBINATION THEREOF.

609.8 STRUCTURAL STRENGTH

ALLOWABLE STRESSES SHALL NOT BE EXCEEDED FOR MATERIALS USED WHERE A VERTICAL OR HORIZONTAL FORCE OF 250 LB. (1112 N) IS APPLIED AT ANY POINT ON THE GRAB BAR, FASTENER MOUNTING DEVICE, OR SUPPORTING STRUCTURE.

SECTION 611 - WASHING MACHINES AND CLOTHES DRYERS

611.2 CLEAR FLOOR SPACE

A CLEAR FLOOR SPACE COMPLYING WITH SECTION 305, POSITIONED FOR PARALLEL APPROACH SHALL BE PROVIDED. FOR TOP LOADING MACHINES, THE CLEAR FLOOR SPACE SHALL BE CENTERED ON THE APPLIANCE. FOR THE FRONT LOADING MACHINES, THE CENTERLINE OF THE CLEAR FLOOR SPACE SHALL BE OFFSET 24" INCHES (610 MM) MAXIMUM FROM THE CENTERLINE OF THE DOOR OPENING.

611.4 HEIGHT

TOP LOADING MACHINES SHALL HAVE A DOOR TO THE LAUNDRY COMPARTMENT 36" INCHES (915MM) MAXIMUM ABOVE THE FLOOR. FRONT LOADING MACHINES SHALL HAVE THE BOTTOM OF THE OPENING TO THE LAUNDRY COMPARTMENT 15" INCHES (380 MM) MINIMUM AND 36 INCHES (915 MM) MAXIMUM ABOVE THE FLOOR.

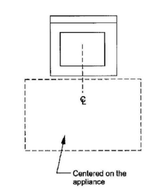

(a)
TOP LOADING

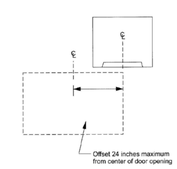

(b)
FRONT LOADING

FIG. 611.2
CLEAR FLOOR SPACE

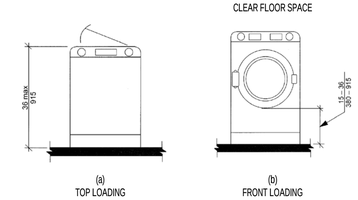

(a)
TOP LOADING

(b)
FRONT LOADING

FIG. 611.2
CLEAR FLOOR SPACE

H 2 M architects + engineers

538 Broad Hollow Road, 4th Floor East
Melville, NY 11747
631.756.8000 • www.h2m.com

CONSULTANTS:

MARK	DATE	DESCRIPTION

REGISTERED ARCHITECT ROBERT BEE 032389 STATE OF NEW YORK

*ALTERATION OF THIS DOCUMENT EXCEPT BY A LICENSED PROFESSIONAL IS ILLEGAL.

DESIGNED BY:	DRAWN BY:	CHECKED BY:	REVIEWED BY:
KEM	JHG		

PROJECT No:	DATE:	SCALE:
VGFD2001	JULY 2022	AS SHOWN

CLIENT

VAILS GATE FIRE DISTRICT

New Storage Building (Phase I)
New Fire Station (Phase II)

872 Blooming Grove Turnpike
New Windsor, NY 12553

CONTRACT

CONTRACT G
GENERAL CONSTRUCTION

STATUS

FINAL BID DOCUMENT

SHEET TITLE

ARCHITECTURE
GENERAL ACCESSIBILITY REQUIREMENTS
PHASE 1 & PHASE 2

DRAWING No.

G 005.00

C:\Users\jgazman\Documents\VGFD2001_Central2_A_jgazman.rvt
7/19/2022 8:23:58 AM

SECTION 703 - SIGNS

703.1 GENERAL

ACCESSIBLE SIGNS SHALL COMPLY WITH SECTION 703. TACTILE SIGNS SHALL CONTAIN BOTH RAISED CHARACTERS AND BRAILLE. WHERE SIGNS WITH BOTH VISUAL AND RAISED CHARACTERS ARE REQUIRED, EITHER ONE SIGN WITH BOTH VISUAL AND RAISED CHARACTERS, OR TWO SEPARATE SIGNS, ONE WITH VISUAL AND ONE WITH RAISED CHARACTERS SHALL BE PROVIDED

703.2 VISUAL CHARACTERS

703.2.1 GENERAL

VISUAL CHARACTERS SHALL COMPLY WITH THE FOLLOWING:

1. VISUAL CHARACTERS THAT ALSO SERVE AS RAISED CHARACTERS SHALL COMPLY WITH SECTION 703.3 OR
2. VISUAL CHARACTERS ON VMS SIGNAGE SHALL COMPLY WITH SECTION 703.7, OR
3. VISUAL CHARACTERS NOT COVERED IN ITEMS 1 AND 2 SHALL COMPLY WITH SECTION 703.2

EXCEPTION:

THE VISUAL AND RAISED REQUIREMENT OF ITEM 1 SHALL BE PERMITTED TO BE PROVIDED BY TWO SEPARATE SIGNS THAT PROVIDE CORRESPONDING INFORMATION PROVIDED ONE SIGN COMPLIES WITH SECTION 703.2 AND THE SECOND SIGN COMPLIES WITH SECTION 703.3.

703.2.2 CASE

CHARACTERS SHALL BE UPPERCASE, LOWERCASE, OR A COMBINATION OF BOTH.

703.2.3 STYLE

CHARACTERS SHALL BE CONVENTIONAL IN FORM. CHARACTERS SHALL NOT BE ITALIC, OBLIQUE, SCRIPT, HIGHLY DECORATIVE, OR OF OTHER UNUSUAL FORMS.

703.2.4 CHARACTER HEIGHT

THE UPPERCASE LETTER "I" SHALL BE USED TO DETERMINE THE ALLOWABLE HEIGHT OF ALL CHARACTERS OF A FONT. THE UPPERCASE LETTER "I" OF THE FONT SHALL HAVE A MINIMUM HEIGHT COMPLYING WITH TABLE 703.2.4. VIEWING DISTANCE SHALL BE MEASURED AS THE HORIZONTAL DISTANCE BETWEEN THE CHARACTER AND AN OBSTRUCTION PREVENTING FURTHER APPROACH TOWARDS THE SIGN.

703.2.5 CHARACTER WIDTH

THE UPPERCASE LETTER "O" SHALL BE USED TO DETERMINE THE ALLOWABLE WIDTH OF ALL CHARACTERS OF A FONT. THE WIDTH OF THE UPPERCASE LETTER "O" OF THE FONT SHALL BE 55 PERCENT MINIMUM AND 110 PERCENT MAXIMUM OF THE HEIGHT OF THE UPPERCASE "I" OF THE FONT.

703.2.6 STROKE WIDTH

THE UPPERCASE LETTER "I" SHALL BE USED TO DETERMINE THE ALLOWABLE STROKE WIDTH OF ALL CHARACTERS OF A FONT. THE STROKE WIDTH SHALL BE 10 PERCENT MINIMUM AND 30 PERCENT MAXIMUM OF THE HEIGHT OF THE UPPERCASE "I" OF THE FONT.

703.2.7 CHARACTER SPACING

SPACING SHALL BE MEASURED BETWEEN THE TWO CLOSEST POINTS OF ADJACENT CHARACTERS WITHIN A MESSAGE, EXCLUDING WORD SPACES. SPACING BETWEEN INDIVIDUAL CHARACTERS SHALL BE 10 PERCENT MINIMUM AND 35 PERCENT MAXIMUM OF THE CHARACTER HEIGHT.

SECTION 705- DETECTABLE WARNINGS

705.1 GENERAL

DETECTABLE WARNING SURFACES SHALL COMPLY WITH SECTION 705.

705.2 STANDARDIZATION

DETECTABLE WARNING SURFACES SHALL BE STANDARD WITHIN A BUILDING, FACILITY, SITE, OR COMPLEX OF BUILDINGS.

EXCEPTION:

IN FACILITIES THAT HAVE BOTH INTERIOR AND EXTERIOR LOCATIONS, DETECTABLE WARNINGS IN EXTERIOR LOCATIONS SHALL NOT BE REQUIRED TO COMPLY WITH SECTION 705.4.

705.3 CONTRAST

DETECTABLE WARNING SURFACES SHALL CONTRAST VISUALLY WITH ADJACENT SURFACES, EITHER LIGHT-ON-DARK OR DARK-ON-LIGHT.

705.4 INTERIOR LOCATIONS

DETECTABLE WARNING SURFACES IN INTERIOR LOCATIONS SHALL DIFFER FROM ADJOINING WALKING SURFACES IN RESILIENCY OR SOUND-ON-CANE CONTACT.

SECTION 706- ASSISTIVE LISTENING SYSTEMS

706.1 GENERAL

ACCESSIBLE ASSISTIVE LISTENING SYSTEMS IN ASSEMBLY AREAS SHALL COMPLY WITH SECTION 706.

706.2 GENERAL

RECEIVERS REQUIRED FOR USE WITH AN ASSISTIVE LISTENING SYSTEM SHALL INCLUDE A 1/8-INCH (3.2 MM) STANDARD MONO JACK.

706.3 RECEIVER HEARING-AID COMPATIBILITY

RECEIVERS REQUIRED TO BE HEARING AID COMPATIBLE SHALL INTERFACE WITH TELECOILS IN HEARING AIDS THROUGH THE PROVISION OF NECK LOOPS.

706.4 SOUND PRESSURE LEVEL

ASSISTIVE LISTENING SYSTEMS SHALL BE CAPABLE OF PROVIDING A SOUND PRESSURE LEVEL OF 110 DB MINIMUM AND 118 DB MAXIMUM, WITH A DYNAMIC RANGE ON THE VOLUME CONTROL OF 50 DB.

706.5 SIGNAL-TO-NOISE RATIO

THE SIGNAL-TO-NOISE RATIO FOR INTERNALLY GENERATED NOISE IN ASSISTIVE LISTENING SYSTEMS SHALL BE 18 DB MINIMUM.

706.5 PEAK CLIPPING LEVEL

PEAK CLIPPING SHALL NOT EXCEED 18 DB OF CLIPPING RELATIVE TO THE PEAKS OF SPEECH.

SECTION 803 - Dressing, Fitting and Locker Rooms

803.1 GENERAL

ACCESSIBLE DRESSING, FITTING AND LOCKER ROOMS SHALL COMPLY WITH SECTION 803.

803.2 TURNING SPACE

A TURNING SPACE COMPLYING WITH SECTION 304 SHALL BE PROVIDED WITHIN THE ROOM.

803.3 DOOR SWING

DOORS SHALL NOT SWING INTO THE ROOM UNLESS A CLEAR FLOOR SPACE COMPLYING WITH SECTION 305.3 IS PROVIDED WITHIN THE ROOM, BEYOND THE ARC OF THE DOOR SWING.

803.4 BENCHES

A BENCH COMPLYING WITH SECTION 903 SHALL BE PROVIDED WITHIN THE ROOM.

803.5 COAT HOOKS AND SHELVES

ACCESSIBLE COAT HOOKS PROVIDED WITHIN THE ROOM SHALL ACCOMMODATE A FORWARD REACH OR SIDE REACH COMPLYING WITH SECTION 308. WHERE PROVIDED, A SHELF SHALL BE 40 INCHES (1015 MM) MINIMUM AND 48 INCHES (1220 MM) MAXIMUM ABOVE THE FLOOR.

SECTION 804 - KITCHENS AND KITCHENETTES

804.1 GENERAL

ACCESSIBLE KITCHENS AND KITCHENETTES SHALL COMPLY WITH SECTION 804.

804.2 CLEARANCE

WHERE A PASS-THROUGH KITCHEN IS PROVIDED, CLEARANCES SHALL COMPLY WITH SECTION 804.2.1. WHERE A U-SHAPED KITCHEN IS PROVIDED, CLEARANCES SHALL COMPLY WITH SECTION 804.2.2.

EXCEPTIONS:

SPACES THAT DO NOT PROVIDE A COOKTOP OR CONVENTIONAL RANGE SHALL NOT BE REQUIRED, PROVIDED THERE IS A 40-INCH (1015MM) MINIMUM CLEARANCE BETWEEN ALL OPPOSING BASE CABINETS, COUNTER TOPS, APPLIANCES, OR WALLS WITHIN WORK AREAS.

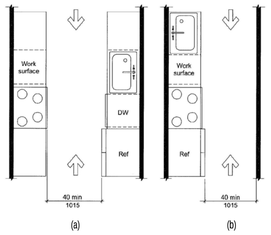

FIG. 804.2.1
PASS-THROUGH KITCHEN CLEARANCE

804.2.1 PASS-THROUGH KITCHENS

IN PASS-THROUGH KITCHENS WHERE COUNTERS, APPLIANCES OR CABINETS ARE ON TWO OPPOSING SIDES, OR WHERE COUNTER, APPLIANCES OR CABINETS ARE OPPOSITE A PARALLEL WALL, CLEARANCE BETWEEN ALL OPPOSING BASE CABINETS, COUNTER TOPS, APPLIANCES OR WALLS WITHIN KITCHEN WORK AREAS SHALL BE 40 INCHES (1015 MM) MINIMUM. PASS-THROUGH KITCHENS SHALL HAVE TWO ENTRIES.

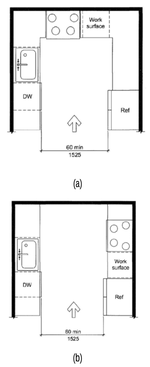

804.2.2 U-SHAPED KITCHENS

IN KITCHENS ENCLOSED ON THREE CONTIGUOUS SIDES, CLEARANCE BETWEEN ALL OPPOSING BASE CABINETS, COUNTERTOPS, APPLIANCES OR WALLS WITHIN KITCHEN WORK AREAS SHALL BE 60 INCHES (1525 MM) MINIMUM.

FIG. 804.2.2
U-SHAPED KITCHEN CLEARANCE

804.3 WORK SURFACE

AT LEAST ONE WORK SURFACE SHALL BE PROVIDED IN ACCORDANCE WITH 902.

EXCEPTIONS:

SPACES THAT DO NOT PROVIDE A COOKTOP OR CONVENTIONAL RANGE SHALL NOT BE REQUIRED TO PROVIDE AN ACCESSIBLE WORK SURFACE.

804.4 SINKS

THE SINK SHALL COMPLY WITH 606.

804.5 APPLIANCES

WHERE PROVIDED, KITCHEN APPLIANCES SHALL COMPLY WITH SECTION 804.5.

804.5.1 CLEAR FLOOR SPACE

A CLEAR FLOOR SPACE COMPLYING WITH SECTION 305 SHALL BE PROVIDED AT EACH KITCHEN APPLIANCE.

804.5.2 OPERABLE PARTS

ALL APPLIANCE CONTROLS SHALL COMPLY IN SECTION 309.

EXCEPTIONS:

1. APPLIANCE DOORS AND DOOR LATCHING DEVICES SHALL NOT BE REQUIRED TO COMPLY WITH SECTION 309.4.
2. BOTTOM-HINGED APPLIANCE DOORS, WHEN IN THE OPEN POSITION,SHALL NOT BE REQUIRED TO COMPLY WITH SECTION 309.3.

804.5.3 DISHWASHER

A CLEAR FLOOR SPACE POSITIONED ADJACENT TO THE DISHWASHER DOOR, SHALL BE PROVIDED. THE DISHWASHER DOOR IN THE OPEN POSITION SHALL NOT OBSTRUCT THE CLEAR FLOOR SPACE FOR THE DISHWASHER OR AN ADJACENT SINK.

804.5.4 COOKTOP

804.5.4.1 APPROACH

A CLEAR FLOOR SPACE, POSITIONED FOR A PARALLEL OR FORWARD APPROACH TO THE COOKTOP SHALL BE PROVIDED.

804.5.4.2 FORWARD APPROACH

WHERE THE CLEAR FLOOR SPACE IS POSITIONED FOR A FORWARD APPROACH, KNEE AND TOE CLEARANCE COMPLYING WITH SECTION 306 SHALL BE PROVIDED.

804.5.4.3 PARALLEL APPROACH

WHERE THE CLEAR FLOOR SPACE IS POSITIONED FOR A PARALLEL APPROACH, THE CLEAR FLOOR SPACE SHALL BE CENTERED ON THE APPLIANCE.

804.5.5 OVEN

804.5.5.1 CLEAR FLOOR SPACE

THE OVEN DOOR IN THE OPEN POSITION SHALL NOT OBSTRUCT THE CLEAR FLOOR SPACE FOR THE OVEN.

804.5.6 REFRIGERATOR / FREEZER

A CLEAR FLOOR SPACE, POSITIONED FOR A PARALLEL APPROACH TO THE REFRIGERATOR / FREEZER, SHALL BE PROVIDED. THE CENTERLINE OF THE CLEAR FLOOR SPACE SHALL BE OFFSET 24 INCHES (610 MM) MAXIMUM FROM THE CENTERLINE OF THE APPLIANCE.

SECTION 903 - BENCHES

903.2 CLEAR FLOOR SPACE

A CLEAR FLOOR SPACE COMPLYING WITH SECTION 305, POSITIONED FOR PARALLEL APPROACH TO THE BENCH SEAT, SHALL BE PROVIDED.

903.3 SIZE

BENCHES SHALL HAVE SEATS 42" INCHES (1065 MM) MINUMUM IN LENGTH, AND 20" INCHES (510 MM) MINIMUM AND 24" INCHES (610 MM) MAXIMUM IN DEPTH.

903.4 HEIGHT

THE TOP OF THE BENCH SEAT SHALL BE 17" INCHES (430 MM) MINIMUM AND 19 " INCHES (485 MM) MAXIMUM ABOVE THE FLOOR, MEASURED TO THE TOP OF THE SEAT.

ACCESSIBILITY NOTES:

GENERAL NOTES

1. SPECIAL ATTENTION SHALL BE GIVEN TO COMPLIANCE WITH THE AMERICANS WITH DISABILITIES ACT STANDARDS FOR ACCESSIBLE DESIGN (ADAAG), BUILDING CODE OF APPLICABLE BLDG CODE, AND APPLICABLE LOCAL LAWS AND REGULATIONS, LATEST EDITIONS.
2. IT IS ESSENTIAL THAT CONTRACTORS ARE AWARE OF THE SITE ACCESSIBILITY REQUIREMENTS. THE ARCHITECT HAS DEVELOPED THESE NOTES AND DETAILS TO ASSURE THAT CONTRACTORS ARE AWARE OF THE REQUIREMENTS AT THE POINT IN TIME WHEN THEY ARE BIDDING THE PROJECT. IN ADDITION, THE ARCHITECT HAS MADE A POINT IN THESE NOTES AND DETAILS, AS WELL AS IN OUR DRAWINGS, TO PROVIDE SLOPES / GRADES AND DIMENSIONS THAT COMPLY WITH THE ADAAG, APPLICABLE BLDG CODE AND APPLICABLE LOCAL LAWS AND REGULATIONS, LATEST EDITIONS. IF THESE SLOPES / GRADES AND DIMENSIONS ARE NOT ACHIEVABLE, THE CONTRACTOR IS REQUIRED TO CONTACT THE OWNER AND ARCHITECT IMMEDIATELY AND BEFORE MOVING FORWARD WITH THE WORK.
3. THE CONTRACTOR SHALL NOTIFY THE ARCHITECT IMMEDIATELY OF ANY CONFLICT BETWEEN THESE NOTES AND DETAILS AND OTHER PROJECT DRAWINGS, WHETHER BY THE ARCHITECT OR OTHERS. THE CONTRACTOR SHALL NOT PROCEED WITH THE WORK FOR WHICH THE ALLEGED CONFLICT HAS BEEN DISCOVERED UNTIL SUCH ALLEGED CONFLICT HAS BEEN RESOLVED. NO CLAIM SHALL BE MADE BY THE CONTRACTOR FOR DELAY DAMAGES AS A RESULT OF RESOLUTION OF ANY SUCH CONFLICT(S).
4. THESE ACCESSIBILITY NOTES AND DETAILS ARE INTENDED TO DEPICT SLOPE AND DIMENSIONAL REQUIREMENTS ONLY. REFER TO SIDEWALK, CURBING, AND PAVEMENT DETAILS FOR ADDITIONAL INFORMATION.

ACCESSIBLE ROUTE NOTES

1. AT LEAST ONE ACCESSIBLE ROUTE SHALL BE PROVIDED FROM THE SITE FROM ACCESSIBLE PARKING SPACES AND ACCESSIBLE PASSENGER LOADING ZONES; PUBLIC STREETS OR SIDEWALKS; AND PUBLIC TRANSPORTATION STOPS TO THE ACCESSIBLE BUILDING OR FACILITY THEY SERVE.
2. AT LEAST ONE ACCESSIBLE ROUTE SHALL CONNECT ACCESSIBLE BUILDINGS, ACCESSIBLE FACILITIES, ACCESSIBLE ELEMENTS, AND ACCESSIBLE SPACES THAT ARE ON THE SAME SITE.
3. WALKING SURFACES SHALL HAVE A MAXIMUM RUNNING SLOPE OF 5.0% AND MAXIMUM CROSS SLOPE OF 2.0%.
4. ANY WALKING SURFACE WITH A RUNNING SLOPE GREATER THAN 5.0% IS A RAMP AND SHALL COMPLY WITH THE GUIDELINES FOR RAMPS OR CURB RAMPS.
5. TRANSITIONS BETWEEN RAMPS, WALKS, LANDINGS, GUTTERS OR STREETS SHALL BE FLUSH AND FREE OF ABRUPT VERTICAL CHANGES (1/4 INCH MAXIMUM VERTICAL CHANGE IN LEVEL).
6. FLOOR SURFACES SHALL BE STABLE, FIRM AND SLIP RESISTANT.
7. THE MINIMUM CLEAR WIDTH SHALL BE THIRTY-TWO (32) INCHES FOR A ROUTE SEGMENT LENGTH LESS THAN TWENTY-FOUR (24) INCHES. CONSECUTIVE SEGMENTS OF THIRTY-TWO (32) INCHES IN WIDTH MUST BE SEPARATED BY A ROUTE SEGMENT FORTY-EIGHT (48) INCHES MINIMUM IN LENGTH AND THIRTY-SIX (36) INCHES MINIMUM IN WIDTH.
8. THE MINIMUM CLEAR WIDTH SHALL BE THIRTY-SIX (36) INCHES FOR A ROUTE SEGMENT LENGTH GREATER THAN TWENTY-FOUR (24) INCHES.
9. WHERE AN ACCESSIBLE ROUTE MAKES A 180 DEGREE TURN AROUND AN OBJECT THAT IS LESS THAN FORTY-EIGHT (48) INCHES IN WIDTH, CLEAR WIDTH SHALL BE FORTY-TWO (42) INCHES MINIMUM APPROACHING THE TURN, FORTY-EIGHT (48) INCHES MINIMUM DURING THE TURN, AND FORTY-TWO (42) INCHES MINIMUM LEAVING THE TURN. THE CLEAR WIDTH APPROACHING AND LEAVING THE TURN MAY BE THIRTY-SIX (36) INCHES MINIMUM WHEN THE CLEAR WIDTH AT THE TURN IS SIXTY (60) INCHES MINIMUM.
10. AN ACCESSIBLE ROUTE WITH A CLEAR WIDTH LESS THAN SIXTY (60) INCHES SHALL PROVIDE PASSING SPACES AT INTERVALS OF TWO HUNDRED (200) FEET MAXIMUM. PASSING SPACES SHALL BE EITHER A SIXTY (60) INCH MINIMUM BY SIXTY (60) INCH MINIMUM SPACE; OR AN INTERSECTION OF TWO (2) WALKING SURFACES THAT PROVIDE A COMPLIANT T-SHAPED TURNING SPACE, PROVIDED THE BASE AND ARMS OF THE T-SHAPED SPACE EXTEND FORTY-EIGHT (48) INCHES MINIMUM BEYOND THE INTERSECTION.
11. DOORS, DOORWAYS AND GATES THAT ARE PART OF AN ACCESSIBLE ROUTE SHALL COMPLY WITH ADAAG AND APPLICABLE BLDG CODE REQUIREMENTS.
12. DIRECTIONAL SIGNAGE INDICATING THE ROUTE TO THE NEAREST ACCESSIBLE BUILDING ENTRANCE SHALL BE PROVIDED AT INACCESSIBLE BUILDING ENTRANCES.
13. WHERE POSSIBLE, DRAINAGE INLETS SHALL NOT BE LOCATED ON AN ACCESSIBLE ROUTE IN THE EVENT THAT A DRAINAGE INLET MUST BE LOCATED ON AN ACCESSIBLE ROUTE, THE GRATE SHALL COMPLY WITH ADAAG REQUIREMENTS.

PARKING SPACE NOTES:

1. ACCESSIBLE PARKING SPACES SHALL BE LOCATED ON THE SHORTEST ACCESSIBLE ROUTES OF TRAVEL FROM ADJACENT PARKING TO AN ACCESSIBLE BUILDING ENTRANCE.
2. ACCESSIBLE PARKING SPACES AND ACCESS AISLES SHALL BE AT LEAST NINETY-SIX (96) INCHES WIDE. WHERE PARKING SPACES AND ACCESS AISLES ARE MARKED WITH LINES, THE WIDTH MEASUREMENTS SHALL BE MADE FROM CENTERLINE OF THE MARKINGS. WHERE PARKING SPACES OR ACCESS AISLES ARE NOT ADJACENT TO ANOTHER PARKING SPACE OR ACCESS AISLES, MEASUREMENTS SHALL BE PERMITTED TO INCLUDE THE FULL WIDTH OF THE LINE DEFINING THE PARKING SPACE OR ACCESS AISLE.
3. PARKING ACCESS AISLES SHALL BE PART OF AN ACCESSIBLE ROUTE TO THE BUILDING OR FACILITY ENTRANCE AND SHALL COMPLY WITH PROVISIONS FOR ACCESSIBLE ROUTES. MARKED CROSSINGS SHALL BE PROVIDED WHERE THE ACCESSIBLE ROUTE MUST CROSS VEHICULAR TRAFFIC LANES. WHERE POSSIBLE, IT IS PREFERABLE THAT THE ACCESSIBLE ROUTE NOT PASS BEHIND PARKED VEHICLES.
4. TWO (2) ACCESSIBLE PARKING SPACES MAY SHARE A COMMON ACCESS AISLE.
5. ACCESS AISLES SHALL EXTEND THE FULL LENGTH OF THE PARKING SPACE THEY SERVE.
6. ACCESS AISLES SHALL BE MARKED SO AS TO DISCOURAGE PARKING IN THEM.
7. ACCESS AISLES SHALL NOT OVERLAP THE VEHICULAR WAY. ACCESS AISLES SHALL BE PERMITTED TO BE PLACED ON EITHER SIDE OF THE PARKING SPACE EXCEPT FOR ANGLED VAN PARKING SPACES WHICH SHALL HAVE ACCESS AISLES LOCATED ON THE PASSENGER SIDE OF THE PARKING SPACES.
8. FLOOR SURFACES OF PARKING SPACES AND ACCESS AISLES SERVING THEM SHALL BE STABLE, FIRM AND SLIP RESISTANT. ACCESS AISLES SHALL BE AT THE SAME LEVEL AS THE PARKING SPACES THEY SERVE. CHANGES IN LEVEL ARE NOT PERMITTED.
9. PARKING SPACES AND ACCESS AISLES SHALL BE LEVEL WITH SURFACE SLOPES NOT EXCEEDING 2.0% IN ALL DIRECTIONS.
10. PARKED VEHICLE OVERHANGS SHALL NOT REDUCE THE REQUIRED CLEAR WIDTH OF AN ACCESSIBLE ROUTE.
11. PARKING SPACES FOR VANS AND ACCESS AISLES AND VEHICULAR ROUTES SERVING THEM SHALL PROVIDE A VERTICAL CLEARANCE OF NINETY-EIGHT (98) INCHES MINIMUM. SIGNS SHALL BE PROVIDED AT ENTRANCES TO PARKING FACILITIES INFORMING DRIVERS OF CLEARANCES AND THE LOCATION OF VAN ACCESSIBLE PARKING SPACES.
12. EACH ACCESSIBLE PARKING SPACE SHALL BE PROVIDED WITH SIGNAGE DISPLAYING THE INTERNATIONAL SYMBOL OF ACCESSIBILITY. EACH ACCESS AISLE SHALL BE PROVIDED WITH SIGNAGE READING "NO PARKING ANYTIME". SIGNS SHALL BE INSTALLED AT A CLEAR HEIGHT OF BETWEEN SIXTY (60) INCHES AND EIGHTY-FOUR (84) INCHES ABOVE GRADE AND SHALL NOT INTERFERE WITH AN ACCESSIBLE ROUTE FROM AN ACCESS AISLE. SIGNS LOCATED WHERE THEY MAY BE HIT BY VEHICLES BEING PARKED SHALL BE INSTALLED WITH BOLLARD PROTECTION.
13. ACCESSIBLE PARKING SPACE, ACCESS AISLE STRIPING, AND INTERNATIONAL SYMBOL OF ACCESSIBILITY SHALL BE PAINTED BLUE.

PASSENGER LOADING ZONE NOTES:

1. PASSENGER LOADING ZONES SHALL PROVIDE VEHICULAR PULL-UP SPACE NINETY-SIX (96) INCHES WIDE MINIMUM AND TWENTY (20) FEET LONG MINIMUM.
2. PASSENGER LOADING ZONES SHALL PROVIDE A CLEARLY MARKED ACCESS AISLE THAT IS SIXTY (60) INCHES WIDE MINIMUM AND EXTENDS THE FULL LENGTH OF THE VEHICLE PULL-UP SPACE THEY SERVE.
3. ACCESS AISLE SHALL ADJOIN AN ACCESSIBLE ROUTE AND NOT OVERLAP THE VEHICULAR WAY.
4. VEHICLE PULL-UP SPACES AND ACCESS AISLES SERVING THEM SHALL BE LEVEL WITH SURFACE SLOPES NO EXCEEDING 2.0% IN ALL DIRECTIONS. ACCESS AISLES SHALL BE AT THE SAME LEVEL AS THE VEHICLE PULL-UP SPACE THEY SERVE. CHANGES IN LEVEL ARE NOT PERMITTED.
5. FLOOR SURFACES OF VEHICLE PULL-UP SPACES AND ACCESS AISLES SERVING THEM SHALL BE STABLE, FIRM AND SLIP RESISTANT.
6. VEHICLE PULL-UP SPACES, ACCESS AISLES SERVING THEM AND A VEHICULAR ROUTE FROM AN ENTRANCE TO THE PASSENGER LOADING ZONE, AND FROM THE PASSENGER LOADING ZONE TO A VEHICULAR EXIT SERVING THEM, SHALL PROVIDE A VERTICAL CLEARANCE OF ONE HUNDRED FOURTEEN (114) INCHES MINIMUM.

ACCESSIBLE ENTRANCE NOTES:

1. ACCESSIBLE ENTRANCES SHALL BE PROVIDED AS REQUIRED BY ADAAG AND APPLICABLE BLDG CODE REQUIREMENTS.

H2M architects + engineers

538 Broad Hollow Road, 4th Floor East
Melville, NY 11747
631.756.8000 • www.h2m.com

CONSULTANTS:

MARK	DATE	DESCRIPTION

REGISTERED ARCHITECT ROBERT J. BEE 032389 STATE OF NEW YORK

*ALTERATION OF THIS DOCUMENT EXCEPT BY A LICENSED PROFESSIONAL IS ILLEGAL.

DESIGNED BY:	DRAWN BY:	CHECKED BY:	REVIEWED BY:
KEM	JHG		
PROJECT No: VGFD2001	DATE: JULY 2022		SCALE: AS SHOWN

CLIENT

VAILS GATE FIRE DISTRICT

New Storage Building (Phase I)
New Fire Station (Phase II)

872 Blooming Grove Turnpike
New Windsor, NY 12553

CONTRACT

CONTRACT G
GENERAL CONSTRUCTION

STATUS

FINAL BID DOCUMENT

SHEET TITLE

ARCHITECTURE
GENERAL ACCESSIBILITY REQUIREMENTS
PHASE 1 & PHASE 2

DRAWING No.

G 006.00

C:\Users\jguzman\Documents\VGFD2001_Central21_A_jguzman.rvt
7/18/2022 8:24:42 AM

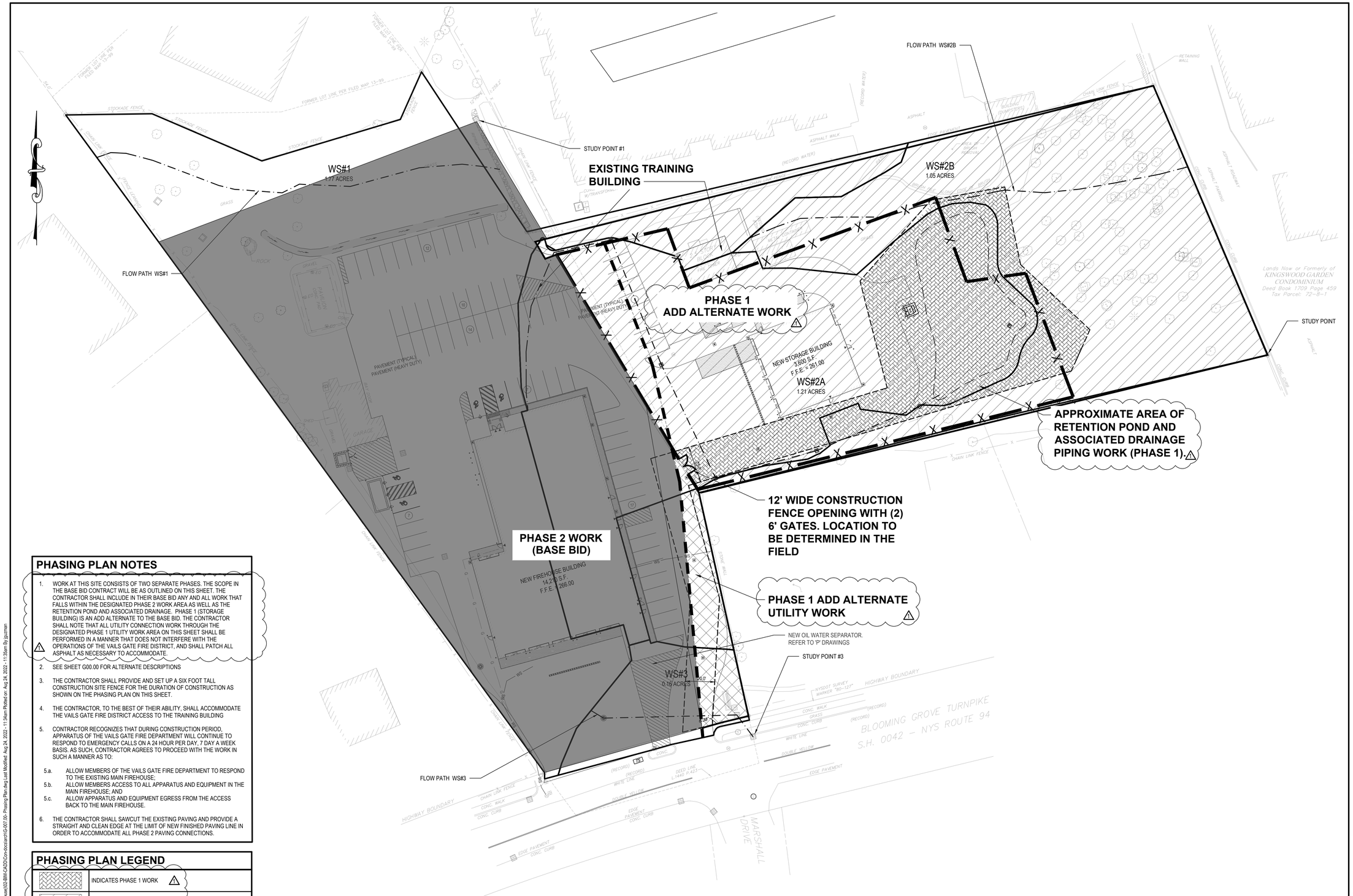

PHASING PLAN NOTES

1. WORK AT THIS SITE CONSISTS OF TWO SEPARATE PHASES. THE SCOPE IN THE BASE BID CONTRACT WILL BE AS OUTLINED ON THIS SHEET. THE CONTRACTOR SHALL INCLUDE IN THEIR BASE BID ANY AND ALL WORK THAT FALLS WITHIN THE DESIGNATED PHASE 2 WORK AREA AS WELL AS THE RETENTION POND AND ASSOCIATED DRAINAGE. PHASE 1 (STORAGE BUILDING) IS AN ADD ALTERNATE TO THE BASE BID. THE CONTRACTOR SHALL NOTE THAT ALL UTILITY CONNECTION WORK THROUGH THE DESIGNATED PHASE 1 UTILITY WORK AREA ON THIS SHEET SHALL BE PERFORMED IN A MANNER THAT DOES NOT INTERFERE WITH THE OPERATIONS OF THE VAILS GATE FIRE DISTRICT, AND SHALL PATCH ALL ASPHALT AS NECESSARY TO ACCOMMODATE. △1
2. SEE SHEET G00.00 FOR ALTERNATE DESCRIPTIONS
3. THE CONTRACTOR SHALL PROVIDE AND SET UP A SIX FOOT TALL CONSTRUCTION SITE FENCE FOR THE DURATION OF CONSTRUCTION AS SHOWN ON THE PHASING PLAN ON THIS SHEET.
4. THE CONTRACTOR, TO THE BEST OF THEIR ABILITY, SHALL ACCOMMODATE THE VAILS GATE FIRE DISTRICT ACCESS TO THE TRAINING BUILDING
5. CONTRACTOR RECOGNIZES THAT DURING CONSTRUCTION PERIOD, APPARATUS OF THE VAILS GATE FIRE DEPARTMENT WILL CONTINUE TO RESPOND TO EMERGENCY CALLS ON A 24 HOUR PER DAY, 7 DAY A WEEK BASIS. AS SUCH, CONTRACTOR AGREES TO PROCEED WITH THE WORK IN SUCH A MANNER AS TO:

   5.a. ALLOW MEMBERS OF THE VAILS GATE FIRE DEPARTMENT TO RESPOND TO THE EXISTING MAIN FIREHOUSE;
   5.b. ALLOW MEMBERS ACCESS TO ALL APPARATUS AND EQUIPMENT IN THE MAIN FIREHOUSE; AND
   5.c. ALLOW APPARATUS AND EQUIPMENT EGRESS FROM THE ACCESS BACK TO THE MAIN FIREHOUSE.

6. THE CONTRACTOR SHALL SAWCUT THE EXISTING PAVING AND PROVIDE A STRAIGHT AND CLEAN EDGE AT THE LIMIT OF NEW FINISHED PAVING LINE IN ORDER TO ACCOMMODATE ALL PHASE 2 PAVING CONNECTIONS.

PHASING PLAN LEGEND

	INDICATES PHASE 1 WORK △1
	INDICATES ADD ALTERNATE WORK
	INDICATES APPROXIMATE LOCATION OF PHASE 1 UTILITY WORK AND ASPHALT PATCH
	INDICATES PHASE 2 WORK
— X —	INDICATES APPROXIMATE LOCATION OF PHASE 1 SIX FOOT TALL CONSTRUCTION FENCE WITH A 12' WIDE CONSTRUCTION FENCE OPENING WITH (2) 6' GATES
— — —	INDICATES APPROXIMATE LIMIT OF PHASE 1 FINISH ASPHALT PAVING

GRAPHIC SCALE

30 0 15 30

(IN FEET)
1 inch = 30 ft.

H2M architects + engineers

538 Broad Hollow Road, 4th Floor East
Melville, NY 11747
631.756.8000 • www.h2m.com

CONSULTANTS:

MARK	DATE	DESCRIPTION
△1	08/19/2022	ADDENDUM #1

REGISTERED ARCHITECT ROBERT BEE 032389 STATE OF NEW YORK

"ALTERATION OF THIS DOCUMENT EXCEPT BY A LICENSED PROFESSIONAL IS ILLEGAL"

DESIGNED BY:	DRAWN BY:	CHECKED BY:	REVIEWED BY:
KWS	JHG		

PROJECT No.:	DATE:	SCALE:
VGFD2001	JULY 2022	AS SHOWN

CLIENT

VAILS GATE FIRE DISTRICT

New Storage Building (Phase I)
New Fire Station (Phase II)

872 Blooming Grove Turnpike
New Windsor, NY 12553

CONTRACT

CONTRACT G
GENERAL CONSTRUCTION

STATUS

FINAL BID DOCUMENT

SHEET TITLE

ARCHITECTURE
PHASING PLAN

DRAWING No.

G 007.01

X:\VGFD\VGFD2001\Vails Gate FD New Firehouse\02-BIM-CADD\Construction\G-007.00- Phasing Plan.dwg Last Modified: Aug 24, 2022 - 11:34am Plotted on: Aug 24, 2022 - 11:35am By:jgusman

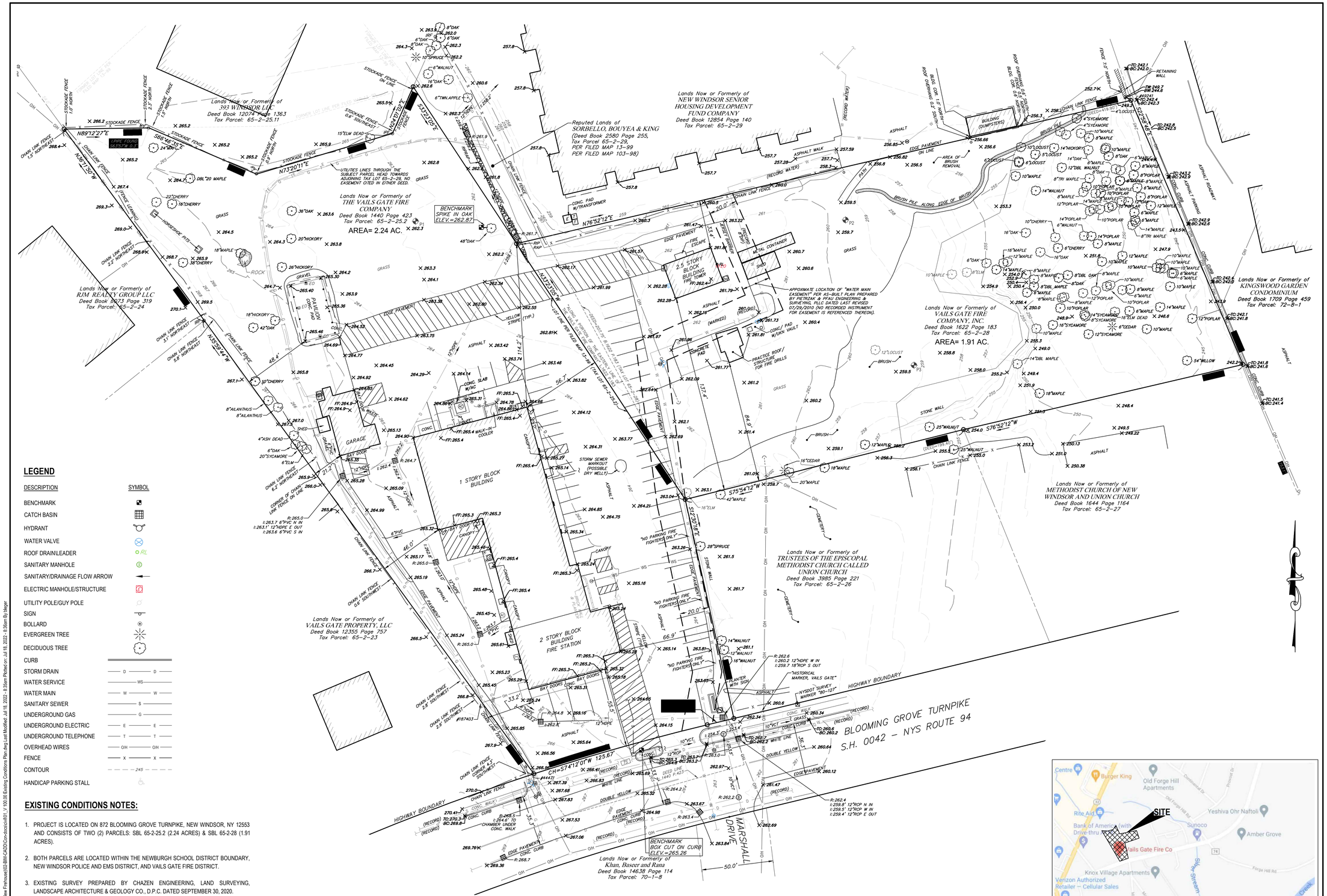

LEGEND

DESCRIPTION	SYMBOL
BENCHMARK	
CATCH BASIN	
HYDRANT	
WATER VALVE	
ROOF DRAIN/LEADER	RL
SANITARY MANHOLE	
SANITARY/DRAINAGE FLOW ARROW	
ELECTRIC MANHOLE/STRUCTURE	
UTILITY POLE/GUY POLE	
SIGN	
BOLLARD	
EVERGREEN TREE	
DECIDUOUS TREE	
CURB	
STORM DRAIN	D
WATER SERVICE	WS
WATER MAIN	W
SANITARY SEWER	S
UNDERGROUND GAS	G
UNDERGROUND ELECTRIC	E
UNDERGROUND TELEPHONE	T
OVERHEAD WIRES	OH
FENCE	X
CONTOUR	245
HANDICAP PARKING STALL	

EXISTING CONDITIONS NOTES:

1. PROJECT IS LOCATED ON 872 BLOOMING GROVE TURNPIKE, NEW WINDSOR, NY 12553 AND CONSISTS OF TWO (2) PARCELS: SBL 65-2-25.2 (2.24 ACRES) & SBL 65-2-28 (1.91 ACRES).
2. BOTH PARCELS ARE LOCATED WITHIN THE NEWBURGH SCHOOL DISTRICT BOUNDARY, NEW WINDSOR POLICE AND EMS DISTRICT, AND VAILS GATE FIRE DISTRICT.
3. EXISTING SURVEY PREPARED BY CHAZEN ENGINEERING, LAND SURVEYING, LANDSCAPE ARCHITECTURE & GEOLOGY CO., D.P.C. DATED SEPTEMBER 30, 2020.
4. BENCHMARK 1 - (SPIKE IN OAK TREE ON NORTHERN PORTION OF SBL 65-2-25.2, EL. = 262.87, NAVD88). BENCHMARK 2 - (BOX CUT IN CURB ON CONCRETE ISLAND AT SITE ENTRANCE, EL. = 265.26, NAVD88).
5. LOCATION OF UNDERGROUND UTILITIES AND STRUCTURES BOTH PUBLIC AND CUSTOMER OWNED, WERE OBTAINED FROM EITHER OLD MAPS, SURVEYS, DRAWINGS/RECORDS SUPPLIED BY OTHERS AND/OR UTILITY MARKOUT. THE OWNER AND ENGINEER DO NOT GUARANTEE OR ACCEPT RESPONSIBILITY FOR ANY DAMAGE TO SUCH FACILITIES DUE TO DISCREPANCIES IN LOCATION AND SIZE SHOWN ON THE PLANS OR THOSE UTILITIES AND STRUCTURES NOT SHOWN.

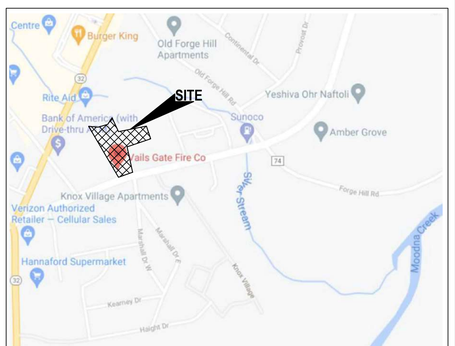

LOCATION MAP
SCALE 1" = 600'±

H2M architects + engineers
538 Broad Hollow Road, 4th Floor East
Melville, NY 11747
631.756.8000 • www.h2m.com

CONSULTANTS:

MARK	DATE	DESCRIPTION

STATE OF NEW YORK · MICHAEL WADE KNOX · 077701 · LICENSED PROFESSIONAL ENGINEER

"ALTERATION OF THIS DOCUMENT EXCEPT BY A LICENSED PROFESSIONAL IS ILLEGAL"

DESIGNED BY:	DRAWN BY:	CHECKED BY:	REVIEWED BY:
SFP	SFP	MWK	KWS

PROJECT No.:	DATE:	SCALE:
VGFD 2001	JULY 2022	AS SHOWN

CLIENT

VAILS GATE FIRE DISTRICT

New Storage Building (Phase I)
New Fire Station (Phase II)

872 Blooming Grove Turnpike,
New Windsor, NY 12553

CONTRACT

CONTRACT G
GENERAL CONSTRUCTION

STATUS

FINAL BID DOCUMENT

SHEET TITLE

EXISTING CONDITIONS PLAN

DRAWING No.

V 100.00

X:\VGFD 1\Vails Gate Fire Dept\VGFD2001-Vails Gate FD New Firehouse\02-BIM-CADD\Condocs\v001 V 100.00 Existing Conditions Plan.dwg Last Modified: Jul 18, 2022 - 8:35am Plotted on: Jul 18, 2022 - 8:35am By:jaeger

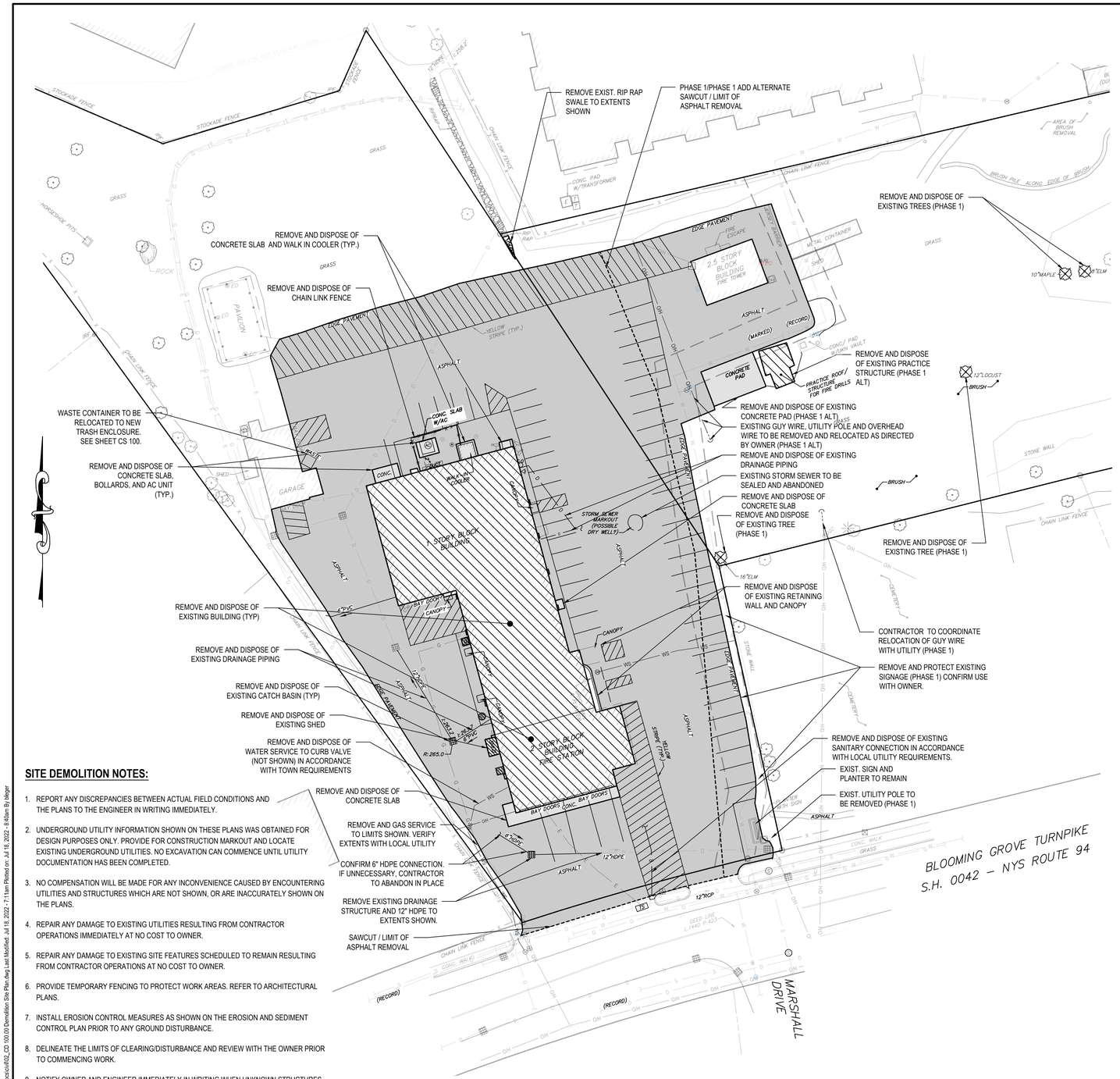

Demolition Site Plan

SCALE: 1" = 30'-0"

SITE DEMOLITION NOTES:

1. REPORT ANY DISCREPANCIES BETWEEN ACTUAL FIELD CONDITIONS AND THE PLANS TO THE ENGINEER IN WRITING IMMEDIATELY.
2. UNDERGROUND UTILITY INFORMATION SHOWN ON THESE PLANS WAS OBTAINED FOR DESIGN PURPOSES ONLY. PROVIDE FOR CONSTRUCTION MARKOUT AND LOCATE EXISTING UNDERGROUND UTILITIES. NO EXCAVATION CAN COMMENCE UNTIL UTILITY DOCUMENTATION HAS BEEN COMPLETED.
3. NO COMPENSATION WILL BE MADE FOR ANY INCONVENIENCE CAUSED BY ENCOUNTERING UTILITIES AND STRUCTURES WHICH ARE NOT SHOWN, OR ARE INACCURATELY SHOWN ON THE PLANS.
4. REPAIR ANY DAMAGE TO EXISTING UTILITIES RESULTING FROM CONTRACTOR OPERATIONS IMMEDIATELY AT NO COST TO OWNER.
5. REPAIR ANY DAMAGE TO EXISTING SITE FEATURES SCHEDULED TO REMAIN RESULTING FROM CONTRACTOR OPERATIONS AT NO COST TO OWNER.
6. PROVIDE TEMPORARY FENCING TO PROTECT WORK AREAS. REFER TO ARCHITECTURAL PLANS.
7. INSTALL EROSION CONTROL MEASURES AS SHOWN ON THE EROSION AND SEDIMENT CONTROL PLAN PRIOR TO ANY GROUND DISTURBANCE.
8. DELINEATE THE LIMITS OF CLEARING/DISTURBANCE AND REVIEW WITH THE OWNER PRIOR TO COMMENCING WORK.
9. NOTIFY OWNER AND ENGINEER IMMEDIATELY IN WRITING WHEN UNKNOWN STRUCTURES OR SUSPECTED HAZARDOUS OR CONTAMINATED MATERIALS ARE ENCOUNTERED PRIOR TO REMOVAL OR DISTURBANCE.
10. TAKE APPROPRIATE MEASURES TO PROTECT PEDESTRIANS AND VEHICULAR TRAFFIC DURING REMOVAL ACTIVITIES, AND PROVIDE TEMPORARY MEASURES FOR THE PROTECTION AND SAFETY OF THE PUBLIC UNTIL FINAL ACCEPTANCE BY THE OWNER.
11. BACKFILL ALL VOIDS RESULTING FROM THE REMOVAL OF EXISTING SITE FEATURES. BACKFILL TO BE SOIL, FREE OF ORGANIC MATERIAL, DEBRIS, TRASH, CLAY AND STONES LARGER THAN 4 INCHES.
12. CONTRACTOR TO HAVE SUFFICIENT PLATES ONSITE TO ACCOMMODATE COVERING ANY OPEN TRENCHING WHICH MAY REQUIRE FIRE ACCESS DURING AN EMERGENCY.
13. CONTRACTOR TO PROTECT ALL UTILITIES NOT SPECIFIED FOR REMOVAL DURING EXCAVATION AND DEMOLITION OF THE FIRE HOUSE AND OTHER SITE ELEMENTS.

GRAPHIC SCALE

30 0 15 30

(IN FEET)
1 inch = 30 ft.

811 1-800-272-4480
Dig Safely. New York
Call811
before you dig
www.digsafelynewyork.com

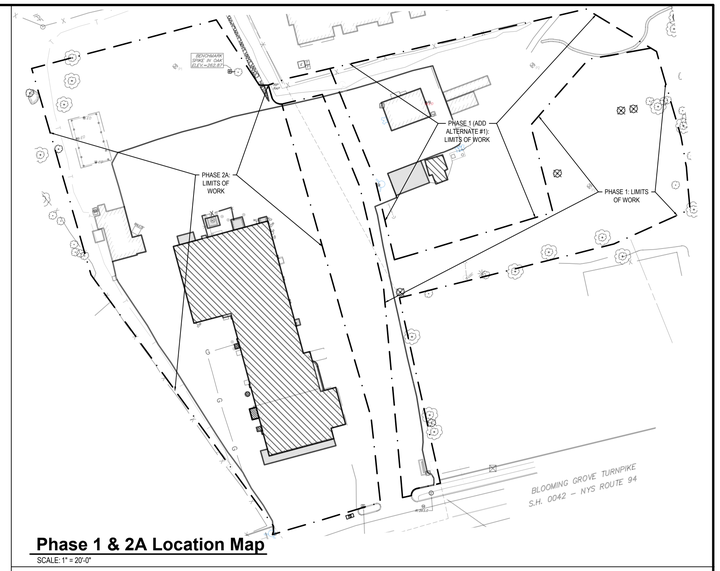

Phase 1 & 2A Location Map

SCALE: 1" = 20'-0"

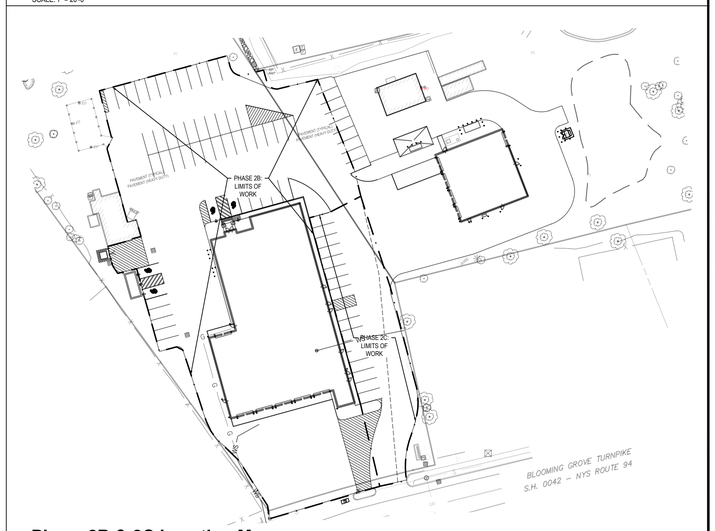

Phase 2B & 2C Location Map

SCALE: 1" = 20'-0"

LEGEND

DESCRIPTION	SYMBOL
REMOVE AND DISPOSE EXISTING TREE	
SAWCUT PAVEMENT LINE	
REMOVE AND DISPOSE EXISTING ASPHALT PAVEMENT AND BASE	
REMOVE AND DISPOSE EXISTING CONCRETE SIDEWALK	
REMOVE AND DISPOSE EXISTING BUILDING/SITE ELEMENTS	
REMOVE AND DISPOSE OF EXISTING CHAIN LINK FENCE	x

PROJECT PHASING NOTES:

THE INTENT OF THE PROJECT PHASING IS TO ALLOW ACCESS TO THE EXISTING FIREHOUSE AT ALL TIMES DURING THE CONSTRUCTION OF PHASE 1/PHASE 1 ADD ALTERNATE AND ACCESS TO THE STORAGE BUILDING (IF INSTALLED) DURING PHASE 2. IF THE STORAGE BUILDING IS INSTALLED THE FIRE DISTRICT MUST HAVE PROPER ACCESS TO RESPOND TO EMERGENCIES AT ALL TIMES. PHASE LIMITS SHOWN ARE AN APPROXIMATE AND PHASING IS INTENDED TO BE A GENERAL SEQUENCE AND LISTING OF TASKS IN EACH PHASE AND IS NOT INTENDED TO BE EXHAUSTIVE OR INCLUSIVE OF ALL TASKS. CONTRACTOR SHALL DISCUSS ANY QUESTIONS OR MODIFICATIONS TO PHASING WITH ARCHITECT/ENGINEER AND OWNER. THE FOLLOWING IS A GENERAL CONSTRUCTION SEQUENCE BASED ON THE TWO (2) PRIMARY PHASES OF THE PROJECT CONSTRUCTION:

PHASE 1:

1. INSTALLATION OF ALL APPLICABLE EROSION AND SEDIMENT CONTROL PRACTICES DOWNGRADE OR DOWNSTREAM OF PHASE LIMITS IN ACCORDANCE WITH THE EROSION & SEDIMENT CONTROL PLAN (INCLUDING SEDIMENT TRAP).
2. REMOVAL OF EXISTING SITE FEATURES SCHEDULED FOR DEMOLITION.
3. GRADING OF AREAS INSIDE PROJECT PHASE AND INSTALLATION OF UNDERGROUND UTILITIES. THIS INCLUDES INSTALLATION OF ALL STORMWATER STRUCTURES AND DRAINAGE AND PROPOSED SANITARY CONNECTION ON BLOOMING GROVE TURNPIKE. IF ADD ALTERNATE PROPOSED, THESE AREAS SHALL REMAIN WITH STONE UNTIL FINAL PAVEMENT. IF NOT PROPOSED, EXISTING IMPERVIOUS AREAS SHALL BE STABILIZED AND SEEDED.
4. FINAL SITE GRADING AND STABILIZATION OF ALL DISTURBED AREAS IN PROJECT PHASE.

PHASE 1 ADD ALTERNATE:

1. INSTALLATION OF ALL APPLICABLE EROSION AND SEDIMENT CONTROL PRACTICES DOWNGRADE OR DOWNSTREAM OF PHASE LIMITS IN ACCORDANCE WITH THE EROSION & SEDIMENT CONTROL PLAN.
2. REMOVAL OF EXISTING SITE FEATURES SCHEDULED FOR DEMOLITION.
3. GRADING OF AREAS INSIDE PROJECT PHASE AND INSTALLATION OF UNDERGROUND UTILITIES. THIS INCLUDES INSTALLATION OF SANITARY AND GAS CONNECTIONS ON BLOOMING GROVE TURNPIKE. THESE AREAS SHALL REMAIN STONED UNTIL FINAL PAVEMENT.
4. CONSTRUCTION OF NEW STORAGE BUILDING.
5. FINAL SITE GRADING AND PAVEMENT OF CONCRETE AND ASPHALT SURFACES IN OVERALL PHASE 1 AREA. CONTRACTOR TO PROVIDE A GRAVEL TRANSITION ALONG THE EDGE OF NEW PAVEMENT AREA AND EXISTING PAVEMENT TO COMPENSATE FOR MINOR GRADE CHANGES BETWEEN TWO SURFACES.
6. STABILIZATION OF ALL DISTURBED AREAS IN PROJECT PHASE.

PHASE 2A:

1. INSTALLATION OF ALL APPLICABLE EROSION AND SEDIMENT CONTROL PRACTICES DOWNGRADE OR DOWNSTREAM OF PHASE LIMITS IN ACCORDANCE WITH THE EROSION & SEDIMENT CONTROL PLAN.
2. REMOVAL OF EXISTING SITE FEATURES, INCLUDING EXISTING FIREHOUSE, SCHEDULED FOR DEMOLITION.
3. INSTALLATION OF UNDERGROUND UTILITIES. THIS INCLUDES INSTALLATION OF WATER SERVICE CONNECTION ON BLOOMING GROVE TURNPIKE. AREAS TO REMAIN STONED UNTIL FINAL PAVEMENT.
4. CONSTRUCTION OF NEW FIREHOUSE.
5. INSTALLATION OF NEW SIGNAGE, SIDEWALKS AND CURBS.
6. INSTALLATION OF NEW VEGETATED SWALE.
7. PLANTING OF ALL TREES AND SHRUBS IN ACCORDANCE WITH LANDSCAPING PLAN.
8. STABILIZATION OF ALL DISTURBED AREAS IN PROJECT PHASE.

PHASE 2B:

1. REMOVAL AND PREP WORK FOR PAVEMENT OF ASPHALT IN PHASE AREA.
2. NEW ASPHALT PAVEMENT (HEAVY DUTY AND TYPICAL) IN PHASE AREA.
3. STRIPING OF PARKING LOT AREAS.

PHASE 2C:

1. CONVERSION OF SEDIMENT TRAP TO STORMWATER POND.
2. FINAL STABILIZATION OF ALL SITE AREAS.
3. REMOVAL OF ALL EROSION AND SEDIMENT CONTROL PRACTICES UPON FINAL STABILIZATION OF SITE.
4. CLEANING OF ALL CATCH BASINS, PIPES AND STORMWATER FACILITIES WHICH MAY HAVE ACCUMULATED SEDIMENT OR DEBRIS DURING CONSTRUCTION PROCESS.
5. REMOVAL AND PREP WORK FOR PAVEMENT OF ASPHALT IN PHASE AREA.
6. NEW ASPHALT PAVEMENT (HEAVY DUTY AND TYPICAL) IN PHASE AREA.
7. STRIPING OF PARKING LOT AREAS.

H2M architects + engineers
538 Broad Hollow Road, 4th Floor East
Melville, NY 11747
631.756.8000 • www.h2m.com

CONSULTANTS:

MARK	DATE	DESCRIPTION

STATE OF NEW YORK · MICHAEL WADE KEY · 077701 · LICENSED PROFESSIONAL ENGINEER

"ALTERATION OF THIS DOCUMENT EXCEPT BY A LICENSED PROFESSIONAL IS ILLEGAL"

DESIGNED BY:	DRAWN BY:	CHECKED BY:	REVIEWED BY:
SFP	SFP	MWK	KWS
PROJECT No.: VGFD 2001	DATE: JULY 2022	SCALE: AS SHOWN	

CLIENT

VAILS GATE FIRE DISTRICT

New Storage Building (Phase I)
New Fire Station (Phase II)

872 Blooming Grove Turnpike,
New Windsor, NY 12553

CONTRACT

CONTRACT G
GENERAL CONSTRUCTION

STATUS

FINAL BID DOCUMENT

SHEET TITLE

DEMOLITION SITE PLAN

DRAWING No.

CD 100.00

X:\VGFD\Vails Gate Fire Dept\VGFD2001\Vails Gate FD-New Firehouse\102-BIM-CADD\Construction\102_CD 100.00 Demolition Site Plan.dwg Last Modified: Jul 18, 2022 - 7:11am Plotted on: Jul 18, 2022 - 8:40am By: bkeyer

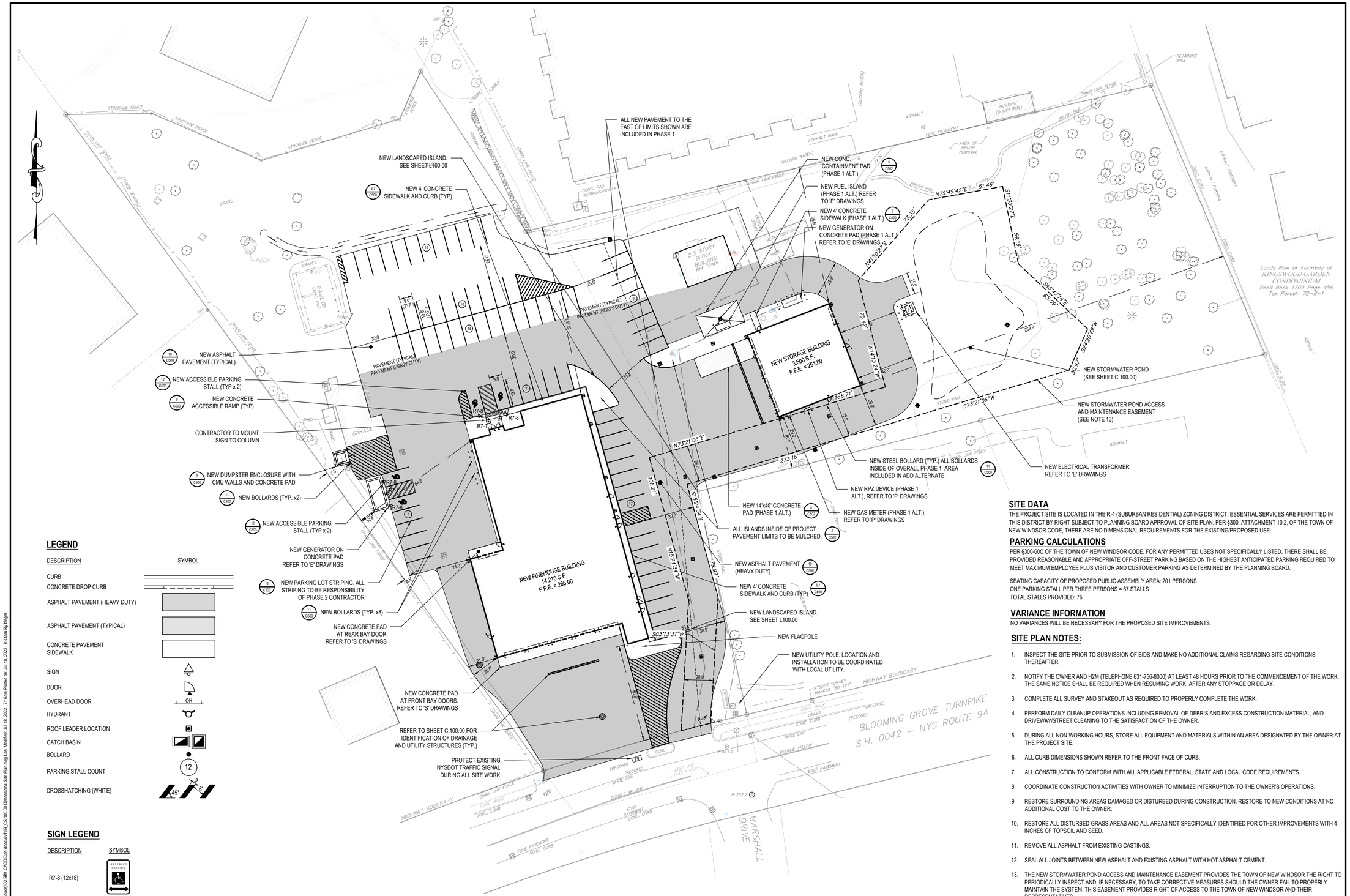

LEGEND

DESCRIPTION	SYMBOL
CURB	
CONCRETE DROP CURB	
ASPHALT PAVEMENT (HEAVY DUTY)	
ASPHALT PAVEMENT (TYPICAL)	
CONCRETE PAVEMENT SIDEWALK	
SIGN	
DOOR	
OVERHEAD DOOR	OH
HYDRANT	
ROOF LEADER LOCATION	
CATCH BASIN	
BOLLARD	
PARKING STALL COUNT	12
CROSSHATCHING (WHITE)	45° x2 6

SIGN LEGEND

DESCRIPTION	SYMBOL
R7-8 (12x18)	RESERVED PARKING
R7-1 (12x18)	NO PARKING ANY TIME

811 1-800-272-4480
Dig Safely. New York
Call811
before you dig
www.digsafelynewyork.com

GRAPHIC SCALE

30 0 15 30

(IN FEET)
1 inch = 30 ft.

BULK REQUIREMENTS TABLE

ITEM	EXISTING	PROPOSED
MINIMUM GROSS LOT AREA	180,774 SF (4.15 AC.)	180,774 SF (4.15 AC.)
MINIMUM LOT WIDTH*	164 FT	164 FT
REQUIRED FRONT YARD DEPTH	55.5 FT	66.8 FT
REQUIRED SIDE YARD/TOTAL BOTH YARDS	33.2 FT/100.1 FT	20.0 FT/73.4 FT
REQUIRED REAR YARD DEPTH	114.2 FT	117.9 FT
REQUIRED STREET FRONTAGE	144.7 FT	144.7 FT
MAXIMUM BUILDING HEIGHT	25 FT	46 FT
DEVELOPMENTAL COVERAGE	42%	51%

*WIDTH CALCULATED AT A 45 FT OFFSET OF THE FRONT YARD LINE AND PARALLEL TO BLOOMING GROVE TURNPIKE

SITE DATA

THE PROJECT SITE IS LOCATED IN THE R-4 (SUBURBAN RESIDENTIAL) ZONING DISTRICT. ESSENTIAL SERVICES ARE PERMITTED IN THIS DISTRICT BY RIGHT SUBJECT TO PLANNING BOARD APPROVAL OF SITE PLAN. PER §300, ATTACHMENT 10:2, OF THE TOWN OF NEW WINDSOR CODE, THERE ARE NO DIMENSIONAL REQUIREMENTS FOR THE EXISTING/PROPOSED USE.

PARKING CALCULATIONS

PER §300-60C OF THE TOWN OF NEW WINDSOR CODE, FOR ANY PERMITTED USES NOT SPECIFICALLY LISTED, THERE SHALL BE PROVIDED REASONABLE AND APPROPRIATE OFF-STREET PARKING BASED ON THE HIGHEST ANTICIPATED PARKING REQUIRED TO MEET MAXIMUM EMPLOYEE PLUS VISITOR AND CUSTOMER PARKING AS DETERMINED BY THE PLANNING BOARD.

SEATING CAPACITY OF PROPOSED PUBLIC ASSEMBLY AREA: 201 PERSONS
ONE PARKING STALL PER THREE PERSONS = 67 STALLS
TOTAL STALLS PROVIDED: 76

VARIANCE INFORMATION

NO VARIANCES WILL BE NECESSARY FOR THE PROPOSED SITE IMPROVEMENTS.

SITE PLAN NOTES:

1. INSPECT THE SITE PRIOR TO SUBMISSION OF BIDS AND MAKE NO ADDITIONAL CLAIMS REGARDING SITE CONDITIONS THEREAFTER.
2. NOTIFY THE OWNER AND H2M (TELEPHONE 631-756-8000) AT LEAST 48 HOURS PRIOR TO THE COMMENCEMENT OF THE WORK. THE SAME NOTICE SHALL BE REQUIRED WHEN RESUMING WORK AFTER ANY STOPPAGE OR DELAY.
3. COMPLETE ALL SURVEY AND STAKEOUT AS REQUIRED TO PROPERLY COMPLETE THE WORK.
4. PERFORM DAILY CLEANUP OPERATIONS INCLUDING REMOVAL OF DEBRIS AND EXCESS CONSTRUCTION MATERIAL, AND DRIVEWAY/STREET CLEANING TO THE SATISFACTION OF THE OWNER.
5. DURING ALL NON-WORKING HOURS, STORE ALL EQUIPMENT AND MATERIALS WITHIN AN AREA DESIGNATED BY THE OWNER AT THE PROJECT SITE.
6. ALL CURB DIMENSIONS SHOWN REFER TO THE FRONT FACE OF CURB.
7. ALL CONSTRUCTION TO CONFORM WITH ALL APPLICABLE FEDERAL, STATE AND LOCAL CODE REQUIREMENTS.
8. COORDINATE CONSTRUCTION ACTIVITIES WITH OWNER TO MINIMIZE INTERRUPTION TO THE OWNER'S OPERATIONS.
9. RESTORE SURROUNDING AREAS DAMAGED OR DISTURBED DURING CONSTRUCTION. RESTORE TO NEW CONDITIONS AT NO ADDITIONAL COST TO THE OWNER.
10. RESTORE ALL DISTURBED GRASS AREAS AND ALL AREAS NOT SPECIFICALLY IDENTIFIED FOR OTHER IMPROVEMENTS WITH 4 INCHES OF TOPSOIL AND SEED.
11. REMOVE ALL ASPHALT FROM EXISTING CASTINGS.
12. SEAL ALL JOINTS BETWEEN NEW ASPHALT AND EXISTING ASPHALT WITH HOT ASPHALT CEMENT.
13. THE NEW STORMWATER POND ACCESS AND MAINTENANCE EASEMENT PROVIDES THE TOWN OF NEW WINDSOR THE RIGHT TO PERIODICALLY INSPECT AND, IF NECESSARY, TO TAKE CORRECTIVE MEASURES SHOULD THE OWNER FAIL TO PROPERLY MAINTAIN THE SYSTEM. THIS EASEMENT PROVIDES RIGHT OF ACCESS TO THE TOWN OF NEW WINDSOR AND THEIR REPRESENTATIVES.

ROAD OPENING PERMIT

THE CONTRACTOR SHALL BE RESPONSIBLE FOR OBTAINING ALL REQUIRED PERMITS FOR ROAD OPENINGS ASSOCIATED WITH THE PROPOSED WORK. THIS INCLUDES REQUIRED PERMITS FROM THE NYSDOT AND TOWN OF NEW WINDSOR. PERMITS SHALL BE REQUIRED PRIOR TO ANY DISTURBANCE WITHIN THE RIGHT-OF-WAY, INCLUDING, BUT NOT LIMITED TO, WORK ASSOCIATED WITH THE WATER SERVICE, SANITARY AND GAS CONNECTION, AND ANY PAVEMENT IMPROVEMENTS.

SITE COVERAGE TABLE

ITEM	SQUARE FEET	% OF TOTAL AREA
BUILDING COVERAGE	19,780 SF	11%
PAVEMENT COVERAGE	68,840 SF	38%
OPEN SPACE	0 SF	0%

H2M architects + engineers
538 Broad Hollow Road, 4th Floor East
Melville, NY 11747
631.756.8000 • www.h2m.com

CONSULTANTS:

MARK	DATE	DESCRIPTION

STATE OF NEW YORK · MICHAEL WADE KOCH · 077701 · LICENSED PROFESSIONAL ENGINEER

"ALTERATION OF THIS DOCUMENT EXCEPT BY A LICENSED PROFESSIONAL IS ILLEGAL"

DESIGNED BY:	DRAWN BY:	CHECKED BY:	REVIEWED BY:
SFP	SFP	MWK	KWS

PROJECT No.:	DATE:	SCALE:
VGFD 2001	JULY 2022	AS SHOWN

CLIENT

VAILS GATE FIRE DISTRICT

New Storage Building (Phase I)
New Fire Station (Phase II)

872 Blooming Grove Turnpike,
New Windsor, NY 12553

CONTRACT

CONTRACT G
GENERAL CONSTRUCTION

STATUS

FINAL BID DOCUMENT

SHEET TITLE

DIMENSIONAL SITE PLAN

DRAWING No.

CS 100.00

X:\VGFD\Vails Gate Fire Dept\VGFD2001-Vails Gate FD-New Firehouse\02-BIM-CADD\Cons-docs\cs\03_CS 100.00 Dimensional Site Plan.dwg Last Modified: Jul 18, 2022 - 7:16am Plotted on: Jul 18, 2022 - 8:44am By hdager

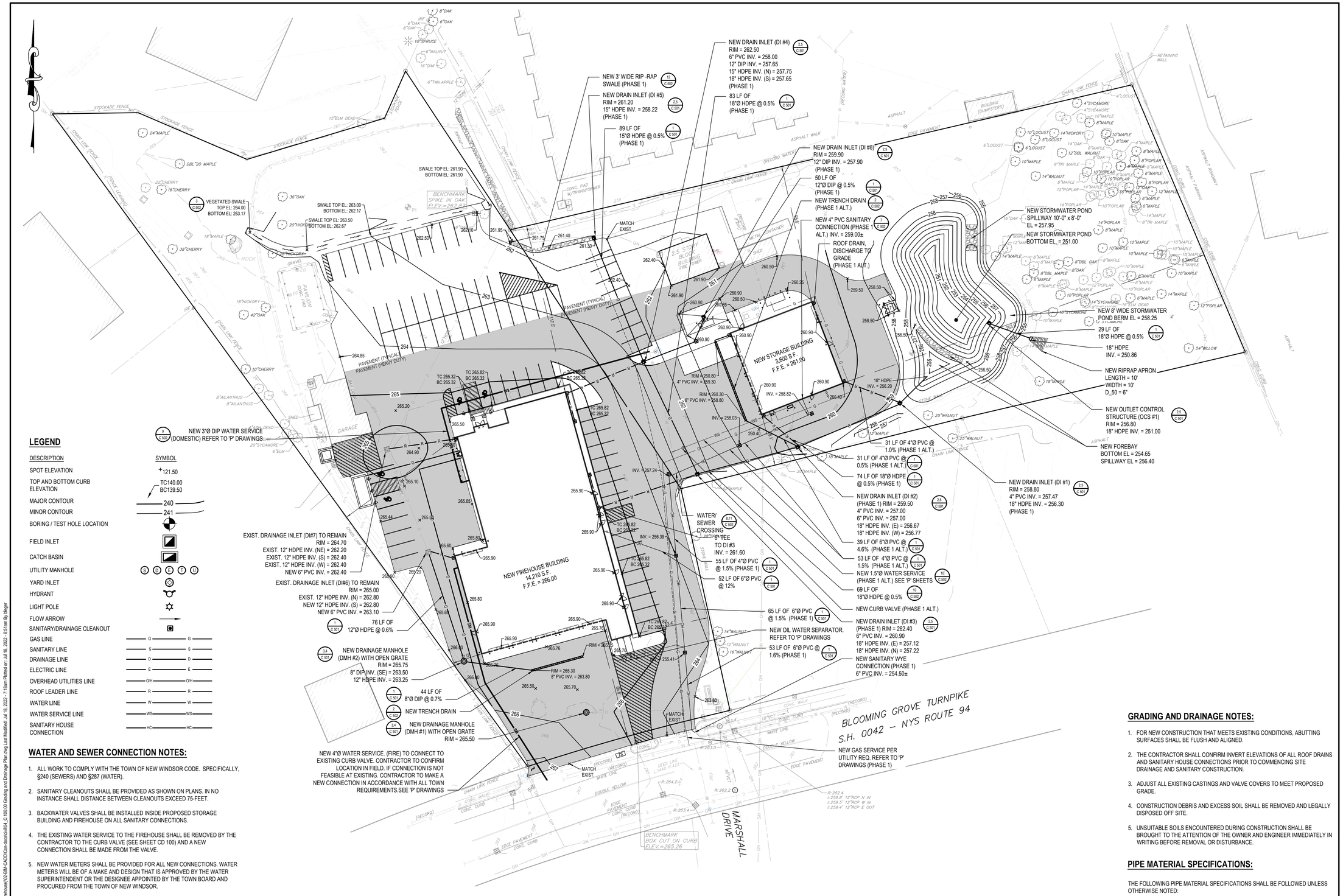

LEGEND

DESCRIPTION	SYMBOL
SPOT ELEVATION	+121.50
TOP AND BOTTOM CURB ELEVATION	TC140.00 BC139.50
MAJOR CONTOUR	240
MINOR CONTOUR	241
BORING / TEST HOLE LOCATION	
FIELD INLET	
CATCH BASIN	
UTILITY MANHOLE	S D E T U
YARD INLET	
HYDRANT	
LIGHT POLE	
FLOW ARROW	
SANITARY/DRAINAGE CLEANOUT	
GAS LINE	G
SANITARY LINE	S
DRAINAGE LINE	D
ELECTRIC LINE	E
OVERHEAD UTILITIES LINE	OH
ROOF LEADER LINE	R
WATER LINE	W
WATER SERVICE LINE	WS
SANITARY HOUSE CONNECTION	HC

WATER AND SEWER CONNECTION NOTES:

1. ALL WORK TO COMPLY WITH THE TOWN OF NEW WINDSOR CODE. SPECIFICALLY, §240 (SEWERS) AND §287 (WATER).
2. SANITARY CLEANOUTS SHALL BE PROVIDED AS SHOWN ON PLANS. IN NO INSTANCE SHALL DISTANCE BETWEEN CLEANOUTS EXCEED 75-FEET.
3. BACKWATER VALVES SHALL BE INSTALLED INSIDE PROPOSED STORAGE BUILDING AND FIREHOUSE ON ALL SANITARY CONNECTIONS.
4. THE EXISTING WATER SERVICE TO THE FIREHOUSE SHALL BE REMOVED BY THE CONTRACTOR TO THE CURB VALVE (SEE SHEET CD 100) AND A NEW CONNECTION SHALL BE MADE FROM THE VALVE.
5. NEW WATER METERS SHALL BE PROVIDED FOR ALL NEW CONNECTIONS. WATER METERS WILL BE OF A MAKE AND DESIGN THAT IS APPROVED BY THE WATER SUPERINTENDENT OR THE DESIGNEE APPOINTED BY THE TOWN BOARD AND PROCURED FROM THE TOWN OF NEW WINDSOR.
6. ADDITIONAL DETAILS FOR THE WATER AND SEWER CONNECTIONS AND INTERIOR WORK IS INCLUDED ON THE PLUMBING DRAWINGS AS WELL AS SHEET C 502, THIS SET.

811 1-800-272-4480
Dig Safely. New York
Call811
before you dig
www.digsafelynewyork.com

GRAPHIC SCALE
30 0 15 30
(IN FEET)
1 inch = 30 ft.

GRADING AND DRAINAGE NOTES:

1. FOR NEW CONSTRUCTION THAT MEETS EXISTING CONDITIONS, ABUTTING SURFACES SHALL BE FLUSH AND ALIGNED.
2. THE CONTRACTOR SHALL CONFIRM INVERT ELEVATIONS OF ALL ROOF DRAINS AND SANITARY HOUSE CONNECTIONS PRIOR TO COMMENCING SITE DRAINAGE AND SANITARY CONSTRUCTION.
3. ADJUST ALL EXISTING CASTINGS AND VALVE COVERS TO MEET PROPOSED GRADE.
4. CONSTRUCTION DEBRIS AND EXCESS SOIL SHALL BE REMOVED AND LEGALLY DISPOSED OFF SITE.
5. UNSUITABLE SOILS ENCOUNTERED DURING CONSTRUCTION SHALL BE BROUGHT TO THE ATTENTION OF THE OWNER AND ENGINEER IMMEDIATELY IN WRITING BEFORE REMOVAL OR DISTURBANCE.

PIPE MATERIAL SPECIFICATIONS:

THE FOLLOWING PIPE MATERIAL SPECIFICATIONS SHALL BE FOLLOWED UNLESS OTHERWISE NOTED:

- DRAIN INLET TO DRAIN INLET CONNECTIONS: 12", 15" OR 18"Ø SMOOTH INTERIOR HDPE
- TRENCH DRAIN TO DRAINAGE INLET CONNECTION: 6"Ø PVC (SCH 80)
- TRENCH DRAIN TO DRAINAGE MANHOLE CONNECTION: 6"Ø DIP
- ROOF LEADER TO DRAINAGE CONNECTION: 4" OR 6"Ø PVC (SCH 80)
- GRAVITY SANITARY HOUSE CONNECTION: 4" OR 6"Ø PVC (SCH 80)
- WATER SERVICES: TYPE "K" COPPER (1 1/2" U.O.N.)
- ALL PVC FITTING TO BE SCH. 80.

H2M architects + engineers
538 Broad Hollow Road, 4th Floor East
Melville, NY 11747
631.756.8000 • www.h2m.com

CONSULTANTS:

MARK	DATE	DESCRIPTION

STATE OF NEW YORK · MICHAEL WADE KAY · 077701 · LICENSED PROFESSIONAL ENGINEER

"ALTERATION OF THIS DOCUMENT EXCEPT BY A LICENSED PROFESSIONAL IS ILLEGAL"

DESIGNED BY:	DRAWN BY:	CHECKED BY:	REVIEWED BY:
SFP	SFP	MWK	KWS
PROJECT No.: VGFD 2001	DATE: JULY 2022	SCALE: AS SHOWN	

CLIENT

VAILS GATE FIRE DISTRICT

New Storage Building (Phase I)
New Fire Station (Phase II)

872 Blooming Grove Turnpike,
New Windsor, NY 12553

CONTRACT

CONTRACT G
GENERAL CONSTRUCTION

STATUS

FINAL BID DOCUMENT

SHEET TITLE

GRADING AND DRAINAGE PLAN

DRAWING No.

C 100.00

X:\VGFD 1\Vails Gate Fire Dept\VGFD2001-1\Vails Gate FD-New Firehouse\02-BIM-CADD\Cm-docs\c404_C 100.00 Grading and Drainage Plan.dwg Last Modified: Jul 18, 2022 - 7:18am Plotted on: Jul 18, 2022 - 8:51am By Hegar

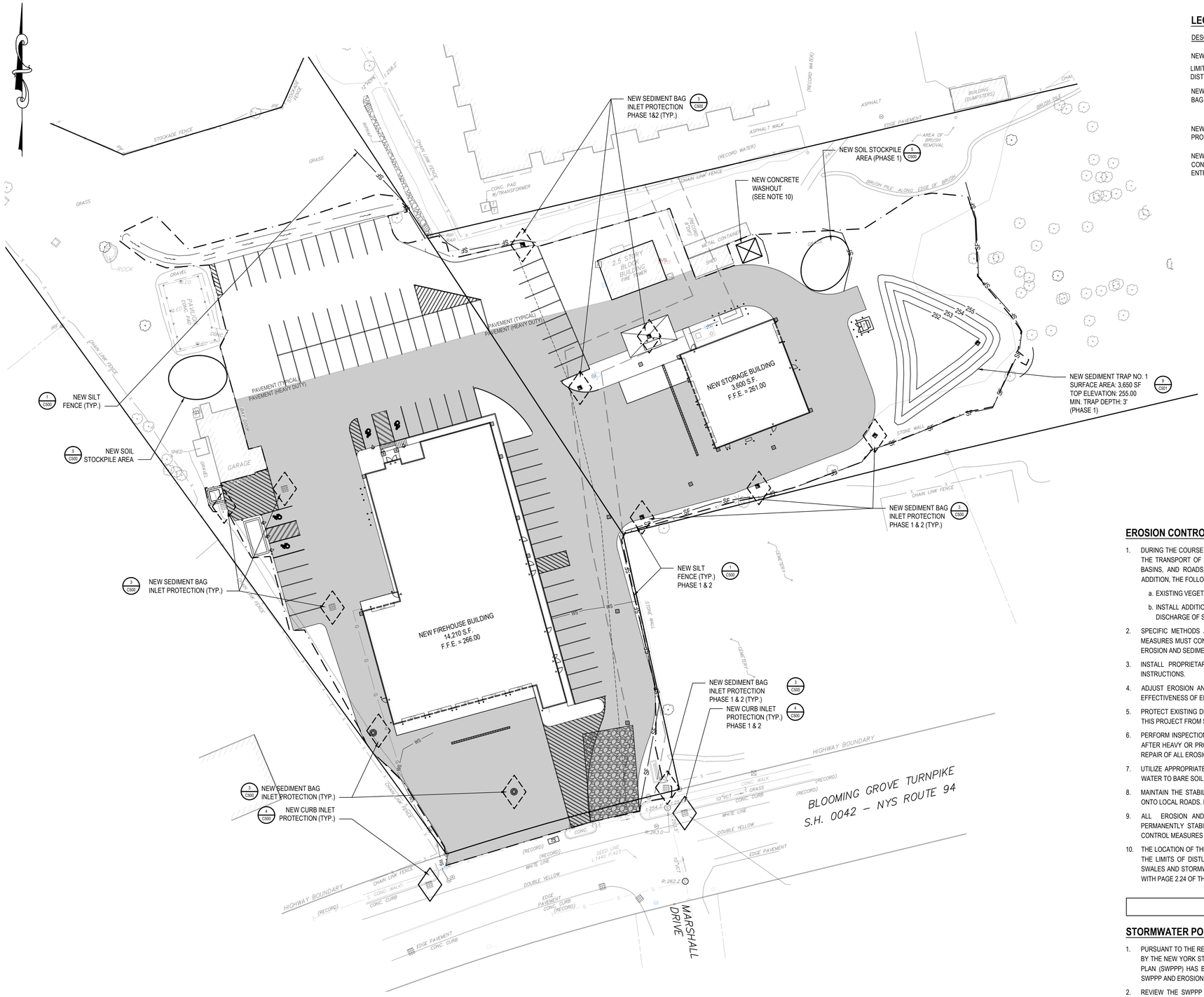

LEGEND

DESCRIPTION	SYMBOL
NEW SILT FENCE	SF
LIMIT OF DISTURBANCE	
NEW INLET SEDIMENT BAG PROTECTION	
NEW CURB INLET PROTECTION	
NEW STABILIZED CONSTRUCTION ENTRANCE	

EROSION CONTROL NOTES:

1. DURING THE COURSE OF CONSTRUCTION, EROSION AND SEDIMENT CONTROL MEASURES ARE NECESSARY TO PREVENT THE TRANSPORT OF SEDIMENT TO UNDISTURBED AREAS, PONDS, WATER COURSES, DRAINAGE SYSTEMS, RECHARGE BASINS, AND ROADS. THE MINIMUM EROSION CONTROL MEASURES REQUIRED ARE INDICATED ON THIS PLAN. IN ADDITION, THE FOLLOWING GENERAL CONDITIONS SHALL BE OBSERVED:
   a. EXISTING VEGETATION SCHEDULED TO REMAIN SHALL BE PROTECTED AND REMAIN UNDISTURBED.
   b. INSTALL ADDITIONAL EROSION AND SEDIMENT CONTROL MEASURES AS REQUIRED TO PREVENT THE INCIDENTAL DISCHARGE OF SEDIMENT FROM THE SITE.
2. SPECIFIC METHODS AND MATERIALS EMPLOYED IN THE INSTALLATION AND MAINTENANCE OF EROSION CONTROL MEASURES MUST CONFORM TO THE LATEST EDITION OF THE "NEW YORK STATE STANDARDS AND SPECIFICATIONS FOR EROSION AND SEDIMENT CONTROL".
3. INSTALL PROPRIETARY EROSION AND SEDIMENT CONTROL PRODUCTS IN ACCORDANCE WITH MANUFACTURERS INSTRUCTIONS.
4. ADJUST EROSION AND SEDIMENT CONTROL MEASURES TO ACCOMMODATE CONSTRUCTION PHASING TO MAINTAIN EFFECTIVENESS OF EROSION AND SEDIMENT CONTROL MEASURES.
5. PROTECT EXISTING DRAINAGE INLETS WITHIN THE PROJECT LIMITS AND NEW DRAINAGE INLETS INSTALLED AS PART OF THIS PROJECT FROM SEDIMENT INTRUSION.
6. PERFORM INSPECTION AND MAINTENANCE OF EROSION AND SEDIMENT CONTROL MEASURES ON A WEEKLY BASIS AND AFTER HEAVY OR PROLONGED STORMS. MAINTENANCE MEASURES INCLUDE, BUT ARE NOT LIMITED TO, CLEANING AND REPAIR OF ALL EROSION AND SEDIMENT CONTROL MEASURES.
7. UTILIZE APPROPRIATE MEANS TO CONTROL DUST DURING CONSTRUCTION, INCLUDING BUT NOT LIMITED TO APPLYING WATER TO BARE SOIL SURFACES.
8. MAINTAIN THE STABILIZED CONSTRUCTION ENTRANCE TO PREVENT SOIL AND LOOSE DEBRIS FROM BEING TRACKED ONTO LOCAL ROADS. MAINTAIN THE CONSTRUCTION ENTRANCE WEEKLY UNTIL THE SITE IS PERMANENTLY STABILIZED.
9. ALL EROSION AND SEDIMENT CONTROL MEASURES SHALL REMAIN IN PLACE UNTIL DISTURBED AREAS ARE PERMANENTLY STABILIZED. AFTER PERMANENT STABILIZATION, REMOVE ALL TEMPORARY EROSION AND SEDIMENT CONTROL MEASURES AND ALL ACCUMULATED SEDIMENT AND DEBRIS FROM THE SITE AND DRAINAGE STRUCTURES.
10. THE LOCATION OF THE CONCRETE WASHOUT IS APPROXIMATE. THE CONTRACTOR SHALL LOCATE THE WASHOUT INSIDE THE LIMITS OF DISTURBANCE IN AN ACCESSIBLE AREA WITH MAXIMUM SEPARATION FROM DRAINAGE STRUCTURES, SWALES AND STORMWATER PRACTICES. THE WASHOUT FACILITY SHALL BE DESIGNED AND INSTALLED IN ACCORDANCE WITH PAGE 2.24 OF THE NYSDEC EROSION AND SEDIMENT CONTROL MANUAL.

TOTAL LAND DISTURBANCE = 2.53 ACRES

STORMWATER POLLUTION PREVENTION PLAN (SWPPP) NOTES:

1. PURSUANT TO THE REQUIREMENTS OF SPDES GENERAL PERMIT FOR CONSTRUCTION ACTIVITY GP-0-20-001 ESTABLISHED BY THE NEW YORK STATE DEPARTMENT OF ENVIRONMENTAL CONSERVATION, A STORMWATER POLLUTION PREVENTION PLAN (SWPPP) HAS BEEN PREPARED FOR THIS PROJECT. ADHERE TO AND IMPLEMENT ALL REQUIREMENTS OF THE SWPPP AND EROSION AND SEDIMENT CONTROL PLAN.
2. REVIEW THE SWPPP AND SIGN IN THE LOCATION SHOWN STATING THAT ALL WORK PERTAINING TO EROSION AND SEDIMENT CONTROL WILL BE PERFORMED WITHIN REQUIREMENTS OF THE SWPPP AND EROSION AND SEDIMENT CONTROL PLAN.
3. A QUALIFIED INSPECTOR SHALL PERFORM WEEKLY INSPECTIONS AT THE CONSTRUCTION SITE. THE QUALIFIED INSPECTOR SHALL MEET THE REQUIREMENTS OUTLINED IN SPDES GENERAL PERMIT FOR STORMWATER DISCHARGE FROM CONSTRUCTION ACTIVITY (GP-0-20-001). IF THE INSPECTIONS FIND ANY DEVIATIONS FROM THE SWPPP OR THE EROSION AND SEDIMENT CONTROL PLAN IT WILL BE NOTED. THE CONTRACTOR WILL HAVE 7 DAYS TO CORRECT ANY DEVIATIONS SO THAT IT COMPLIES WITH THE REQUIREMENTS OF THE SWPPP AND OR EROSION AND SEDIMENT CONTROL PLAN.
4. AT THE COMPLETION OF THE PHASE 1, PHASE 1 CONTRACTOR SHALL CLEAN ALL NEWLY INSTALLED STORM DRAINS AND CATCH BASIN AND SUBMIT A TV INSPECTION CONFIRMING NO DAMAGE OR DEBRIS. ANY DAMAGED DRAINAGE OR UTILITIES SHALL BE REPLACED. AT THE COMPLETION OF PHASE 2, PHASE 2 CONTRACTOR SHALL CLEAN ALL NEWLY INSTALLED STORM DRAINS AND CATCH BASINS (INCLUDING THOSE IN PHASE 1) AND SUBMIT A TV INSPECTION CONFIRMING NO DAMAGE OR DEBRIS. ANY DAMAGED DRAINAGE OR UTILITIES SHALL BE REPLACED

GRAPHIC SCALE
30 0 15 30
(IN FEET)
1 inch = 30 ft.

811 1-800-272-4480
Dig Safely. New York
Call811
before you dig
www.digsafelynewyork.com

H2M architects + engineers
538 Broad Hollow Road, 4th Floor East
Melville, NY 11747
631.756.8000 • www.h2m.com

CONSULTANTS:

MARK	DATE	DESCRIPTION

STATE OF NEW YORK · MICHAEL WADE KEYS · 077701 · LICENSED PROFESSIONAL ENGINEER

"ALTERATION OF THIS DOCUMENT EXCEPT BY A LICENSED PROFESSIONAL IS ILLEGAL"

DESIGNED BY:	DRAWN BY:	CHECKED BY:	REVIEWED BY:
SFP	SFP	MWK	KWS

PROJECT No.:	DATE:	SCALE:
VGFD 2001	JULY 2022	AS SHOWN

CLIENT
VAILS GATE FIRE DISTRICT

New Storage Building (Phase I)
New Fire Station (Phase II)

872 Blooming Grove Turnpike,
New Windsor, NY 12553

CONTRACT
CONTRACT G
GENERAL CONSTRUCTION

STATUS
FINAL BID DOCUMENT

SHEET TITLE
SOIL EROSION AND SEDIMENT CONTROL PLAN

DRAWING No.
C 110.00

X:\VGFD 1\Vails Gate Fire Dept\VGFD2001-1\Vails Gate FD-New Firehouse\02-BIM-CADD\Cnv-docs\cv805_C 110.00 Erosion & Sediment Control Plan.dwg Last Modified: Jul 14, 2022 - 8:21am Plotted on: Jul 18, 2022 - 9:06am By Nieger

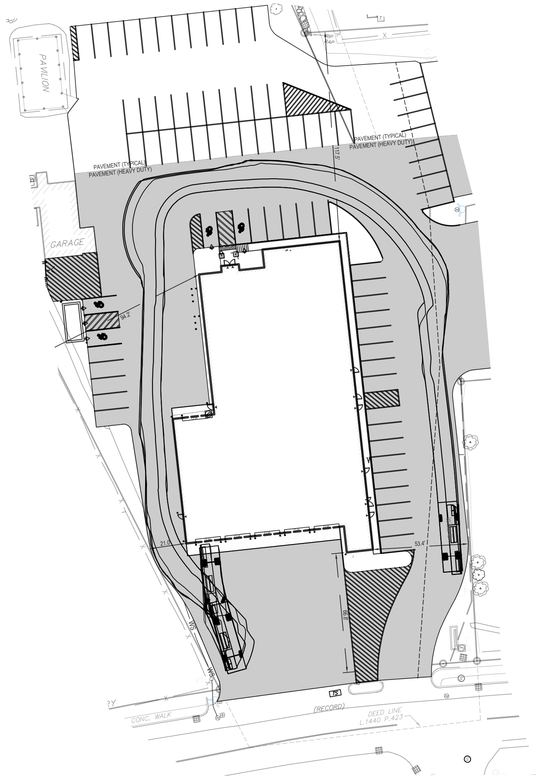

View 1: Rear of Firehouse & Enterance to Front Bay
SCALE: 1" = 40'-0"

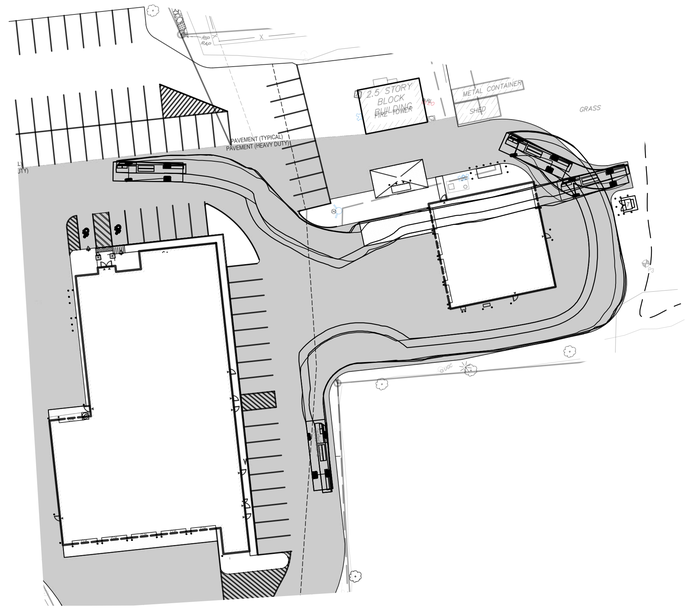

View 2: Entrance to Rear Bay of New Storage Building
SCALE: 1" = 40'-0"

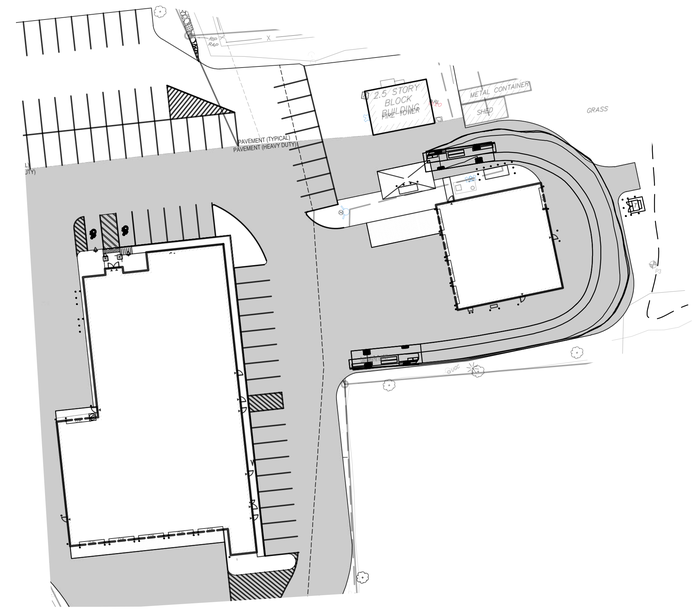

View 3: Rear of Storage Building to Existing Building
SCALE: 1" = 40'-0"

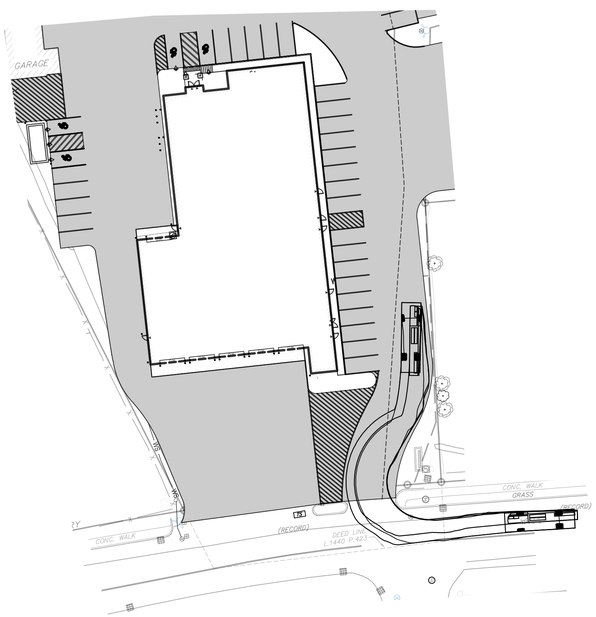

View 4: Right Turn Into Site (Driving West)
SCALE: 1" = 40'-0"

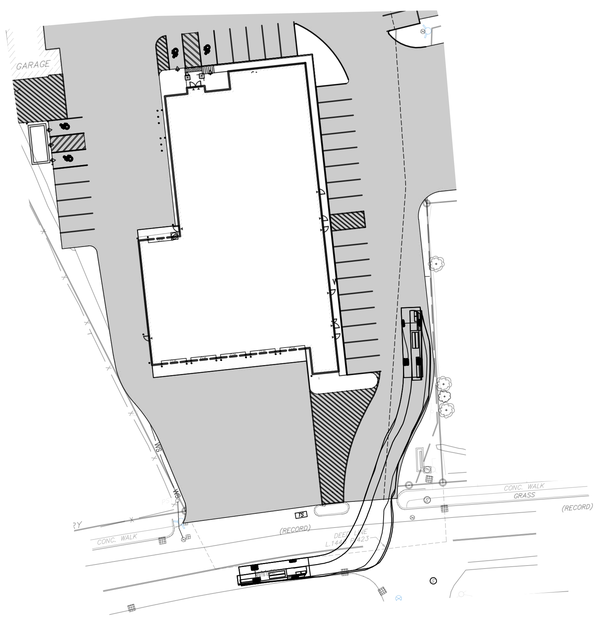

View 5: Left Turn Into Site (Driving East)
SCALE: 1" = 40'-0"

VEHICLE TRACKING NOTES
ALL VEHICLE TRACKING PERFORMED WITH THE VAILS GATE FIRE DISTRICT LADDER TRUCK NO. T-482 (LARGEST TRUCK).

GRAPHIC SCALE
40 0 20 40
(IN FEET)
1 inch = 40 ft.

H2M architects + engineers

538 Broad Hollow Road, 4th Floor East
Melville, NY 11747
631.756.8000 • www.h2m.com

CONSULTANTS:

MARK	DATE	DESCRIPTION

STATE OF NEW YORK
MICHAEL WADE KEFFER
077701
LICENSED PROFESSIONAL ENGINEER

"ALTERATION OF THIS DOCUMENT EXCEPT BY A LICENSED PROFESSIONAL IS ILLEGAL"

DESIGNED BY:	DRAWN BY:	CHECKED BY:	REVIEWED BY:
SFP	SFP	MWK	KWS

PROJECT No.:	DATE:	SCALE:
VGFD 2001	JULY 2022	AS SHOWN

CLIENT
VAILS GATE FIRE DISTRICT

New Storage Building (Phase I)
New Fire Station (Phase II)

872 Blooming Grove Turnpike,
New Windsor, NY 12553

CONTRACT
CONTRACT G
GENERAL CONSTRUCTION

STATUS
FINAL BID DOCUMENT

SHEET TITLE
VEHICLE TRACKING PLAN

DRAWING No.
VT 100.00

X:\VGFD (Vails Gate Fire Dept)\VGFD2001-(Vails Gate FD-New Firehouse)\02-BIM-CADD\Con-docs\civil\06_VT 100.00 Vehicle Tracking Plan.dwg Last Modified: Jul 14, 2022 - 8:29am Plotted on: Jul 18, 2022 - 9:12am By bleger

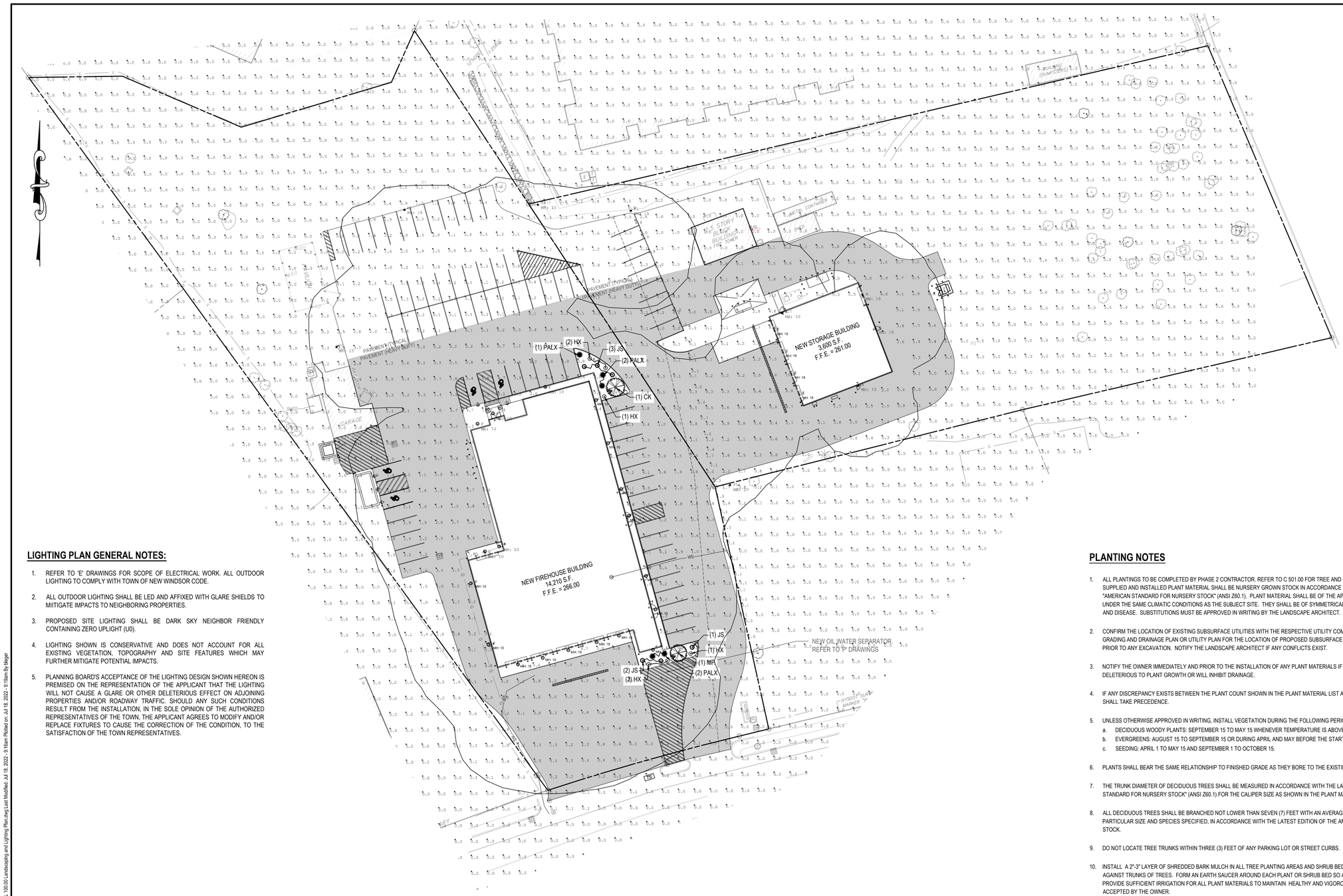

LIGHTING PLAN GENERAL NOTES:

1. REFER TO 'E' DRAWINGS FOR SCOPE OF ELECTRICAL WORK. ALL OUTDOOR LIGHTING TO COMPLY WITH TOWN OF NEW WINDSOR CODE.
2. ALL OUTDOOR LIGHTING SHALL BE LED AND AFFIXED WITH GLARE SHIELDS TO MIITIGATE IMPACTS TO NEIGHBORING PROPERTIES.
3. PROPOSED SITE LIGHTING SHALL BE DARK SKY NEIGHBOR FRIENDLY CONTAINING ZERO UPLIGHT (U0).
4. LIGHTING SHOWN IS CONSERVATIVE AND DOES NOT ACCOUNT FOR ALL EXISTING VEGETATION, TOPOGRAPHY AND SITE FEATURES WHICH MAY FURTHER MITIGATE POTENTIAL IMPACTS.
5. PLANNING BOARD'S ACCEPTANCE OF THE LIGHTING DESIGN SHOWN HEREON IS PREMISED ON THE REPRESENTATION OF THE APPLICANT THAT THE LIGHTING WILL NOT CAUSE A GLARE OR OTHER DELETERIOUS EFFECT ON ADJOINING PROPERTIES AND/OR ROADWAY TRAFFIC. SHOULD ANY SUCH CONDITIONS RESULT FROM THE INSTALLATION, IN THE SOLE OPINION OF THE AUTHORIZED REPRESENTATIVES OF THE TOWN, THE APPLICANT AGREES TO MODIFY AND/OR REPLACE FIXTURES TO CAUSE THE CORRECTION OF THE CONDITION, TO THE SATISFACTION OF THE TOWN REPRESENTATIVES.

LUMINAIRE SCHEDULE

Symbol	Qty	Label	Arrangement	Total Lamp Lumens	LLF	Description
	19	F	SINGLE	N.A.	0.900	URB-XXXX-21-74L-55-4K7-4-U
	4	E	Single	N.A.	0.900	LTR-4RD-U-HL35L-DM1 LTR-4RD-T-HL35K8WGS
	4	A	Single	N.A.	0.900	QEFQ-24L-30-4K:-4
	6	F1	SINGLE	N.A.	1.000	URB-XXXX-21-74L-55-4K7-4-BC

PLANT LIST

KEY	QTY	BOTANICAL NAME	COMMON NAME	SIZE	SPACING	ROOT
CK	1	CORNUS KOUSA "SUMMER STARS"	SUMMER STARS KOUSA DOGWOOD	6'-8'	-	B&B, SPECIMEN
MP	1	MALUS "PINK SPIRES"	PINK SPIRES CRABAPPLE	2" - 2 1/2" CAL.	-	B&B, SPECIMEN
HX	6	HEMEROCALLIS "HAPPY RETURNS"	HAPPY RETURNS DAYLILY	12"-18"	2' O.C. MIN.	NO. 2 CAN
JS	6	JUNIPERUS SQUAMATA 'BLUE STAR'	BLUE STAR JUNIPER	15" - 18"	3' O.C.	NO. 3 CAN
PALX	5	PENNISETUM ALOPECUROIDES "HAMELN"	HAMELN DWARF FOUNTAIN GRASS	6'-8'	15' O.C. MIN.	B&B, DENSE BRANCHING

PLANTING NOTES

1. ALL PLANTINGS TO BE COMPLETED BY PHASE 2 CONTRACTOR. REFER TO C 501.00 FOR TREE AND SHRUB PLANTING DETAILS. ALL SUPPLIED AND INSTALLED PLANT MATERIAL SHALL BE NURSERY GROWN STOCK IN ACCORDANCE WITH THE LATEST EDITION OF THE "AMERICAN STANDARD FOR NURSERY STOCK" (ANSI Z60.1). PLANT MATERIAL SHALL BE OF THE APPROVED SPECIES AND GROWN UNDER THE SAME CLIMATIC CONDITIONS AS THE SUBJECT SITE. THEY SHALL BE OF SYMMETRICAL GROWTH, FREE OF INSECTS, PESTS, AND DISEASE. SUBSTITUTIONS MUST BE APPROVED IN WRITING BY THE LANDSCAPE ARCHITECT.
2. CONFIRM THE LOCATION OF EXISTING SUBSURFACE UTILITIES WITH THE RESPECTIVE UTILITY COMPANIES AND COORDINATE WITH THE GRADING AND DRAINAGE PLAN OR UTILITY PLAN FOR THE LOCATION OF PROPOSED SUBSURFACE UTILITY LINES AND STRUCTURES PRIOR TO ANY EXCAVATION. NOTIFY THE LANDSCAPE ARCHITECT IF ANY CONFLICTS EXIST.
3. NOTIFY THE OWNER IMMEDIATELY AND PRIOR TO THE INSTALLATION OF ANY PLANT MATERIALS IF SUB-GRADE SOIL CONDITIONS ARE DELETERIOUS TO PLANT GROWTH OR WILL INHIBIT DRAINAGE.
4. IF ANY DISCREPANCY EXISTS BETWEEN THE PLANT COUNT SHOWN IN THE PLANT MATERIAL LIST AND THE PLANTING PLAN, THE PLAN SHALL TAKE PRECEDENCE.
5. UNLESS OTHERWISE APPROVED IN WRITING, INSTALL VEGETATION DURING THE FOLLOWING PERIODS:
   a. DECIDUOUS WOODY PLANTS: SEPTEMBER 15 TO MAY 15 WHENEVER TEMPERATURE IS ABOVE 40 DEGREES F.
   b. EVERGREENS: AUGUST 15 TO SEPTEMBER 15 OR DURING APRIL AND MAY BEFORE THE START OF NEW GROWTH.
   c. SEEDING: APRIL 1 TO MAY 15 AND SEPTEMBER 1 TO OCTOBER 15.
6. PLANTS SHALL BEAR THE SAME RELATIONSHIP TO FINISHED GRADE AS THEY BORE TO THE EXISTING GRADE IN THE NURSERY.
7. THE TRUNK DIAMETER OF DECIDUOUS TREES SHALL BE MEASURED IN ACCORDANCE WITH THE LATEST EDITION OF THE "AMERICAN STANDARD FOR NURSERY STOCK" (ANSI Z60.1) FOR THE CALIPER SIZE AS SHOWN IN THE PLANT MATERIAL LIST.
8. ALL DECIDUOUS TREES SHALL BE BRANCHED NOT LOWER THAN SEVEN (7) FEET WITH AN AVERAGE HEIGHT AND SPREAD FOR THE PARTICULAR SIZE AND SPECIES SPECIFIED, IN ACCORDANCE WITH THE LATEST EDITION OF THE AMERICAN STANDARD FOR NURSERY STOCK.
9. DO NOT LOCATE TREE TRUNKS WITHIN THREE (3) FEET OF ANY PARKING LOT OR STREET CURBS.
10. INSTALL A 2"-3" LAYER OF SHREDDED BARK MULCH IN ALL TREE PLANTING AREAS AND SHRUB BEDS. DO NOT PLACE MULCH DIRECTLY AGAINST TRUNKS OF TREES. FORM AN EARTH SAUCER AROUND EACH PLANT OR SHRUB BED SO AS TO HOLD WATER AND MULCH. PROVIDE SUFFICIENT IRRIGATION FOR ALL PLANT MATERIALS TO MAINTAIN HEALTHY AND VIGOROUS CONDITION UNTIL THE PROJECT IS ACCEPTED BY THE OWNER.
11. REMOVE TREE STAKES AND OTHER PLANTING GUIDE MATERIALS,IF SPECIFIED, AFTER ONE YEAR FROM THE TIME OF PLANTING.
12. ALL PLANT MATERIAL SHALL BE GUARANTEED FOR A PERIOD OF ONE YEAR AFTER PLANTING FOLLOWING ACCEPTANCE BY THE OWNER. UPON COMPLETION OF THE ONE YEAR PLANT GUARANTEE PERIOD, REPLACE ALL PLANT MATERIAL DEEMED DEAD, DYING OR DISEASED AS DETERMINED BY THE LANDSCAPE ARCHITECT. REPLACE PLANT WITH THE SAME SPECIES AND SIZE IMMEDIATELY DURING THE CURRENT GROWING SEASON OR AT THE BEGINNING OF THE NEXT GROWING SEASON.
13. UPON COMPLETION OF PLANTING OPERATION CULTIVATE AND NEATLY RAKE ALL PLANTING AREAS.
14. RESTORE ALL DISTURBED GRASS AREAS AND ALL AREAS NOT SPECIFICALLY IDENTIFIED FOR OTHER IMPROVEMENTS WITH 4 INCHES OF TOPSOIL AND SEED. PROVIDE SUFFICIENT MULCH AND IRRIGATION TO ESTABLISH AND MAINTAIN A HEALTHY STAND OF GRASS UNTIL PROJECT IS ACCEPTED BY THE OWNER.

GRAPHIC SCALE

30 0 15 30

(IN FEET)
1 inch = 30 ft.

H2M architects + engineers

538 Broad Hollow Road, 4th Floor East
Melville, NY 11747
631.756.8000 • www.h2m.com

CONSULTANTS:

MARK	DATE	DESCRIPTION

STATE OF NEW YORK · MICHAEL WADE KOCH · 077701 · LICENSED PROFESSIONAL ENGINEER

"ALTERATION OF THIS DOCUMENT EXCEPT BY A LICENSED PROFESSIONAL IS ILLEGAL"

DESIGNED BY:	DRAWN BY:	CHECKED BY:	REVIEWED BY:
SFP	SFP	MWK	KWS

PROJECT No.:	DATE:	SCALE:
VGFD 2001	JULY 2022	AS SHOWN

CLIENT

VAILS GATE FIRE DISTRICT

New Storage Building (Phase I)
New Fire Station (Phase II)

872 Blooming Grove Turnpike,
New Windsor, NY 12553

CONTRACT

CONTRACT G
GENERAL CONSTRUCTION

STATUS

FINAL BID DOCUMENT

SHEET TITLE

LANDSCAPING AND LIGHTING PLAN

DRAWING No.

L 100.00

X:\VGFD\Vails Gate Fire Dept\VGFD2001-Vails Gate FD-New Firehouse\02-BIM-CADD\Cm-docs\ck607 L 100.00 Landscaping and Lighting Plan.dwg Last Modified: Jul 18, 2022 - 9:19am By Hager Plotted on: Jul 18, 2022 - 9:19am By Hager

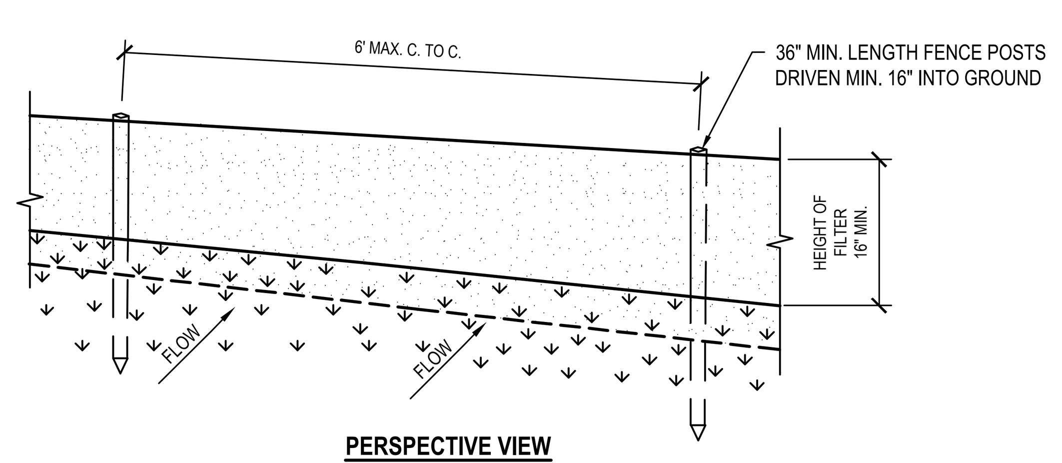

PERSPECTIVE VIEW

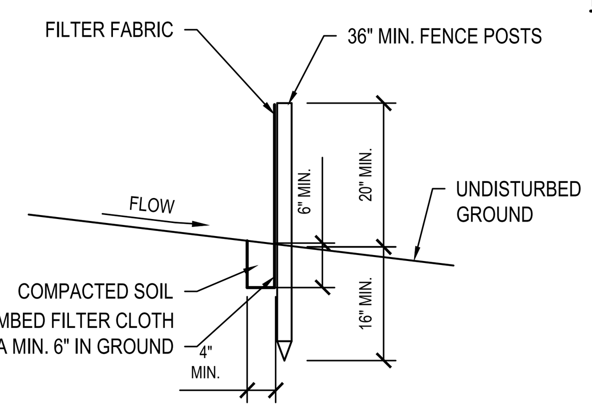

SECTION VIEW

NOTES

1. POSTS SHALL BE 2" X 2" HARDWOOD OR APPROVED EQUIVALENT.
2. FILTER CLOTH TO BE TO BE FASTENED SECURELY TO POSTS AT TOP AND MID SECTION.
3. WHEN TWO SECTIONS OF FILTER CLOTH ADJOIN EACH OTHER THEY SHALL BE OVERLAPPED BY SIX INCHES AND FOLDED AND SECURE AT POST. FILTER CLOTH SHALL BE EITHER FILTER X, MIRAFI 100X, STABILINKA T140N, OR APPROVED EQUIVALENT.
4. MAINTENANCE SHALL BE PERFORMED AS NEEDED AND ACCUMULATED SEDIMENT REMOVED WHEN "BULGES" DEVELOP IN THE SILT FENCE.
5. REMOVE SILT FENCE UPON PERMANENT STABILIZATION OF UPLAND AREAS.

1 Silt Fence - Standard

SCALE: NTS 312513.13 NYDC1-U

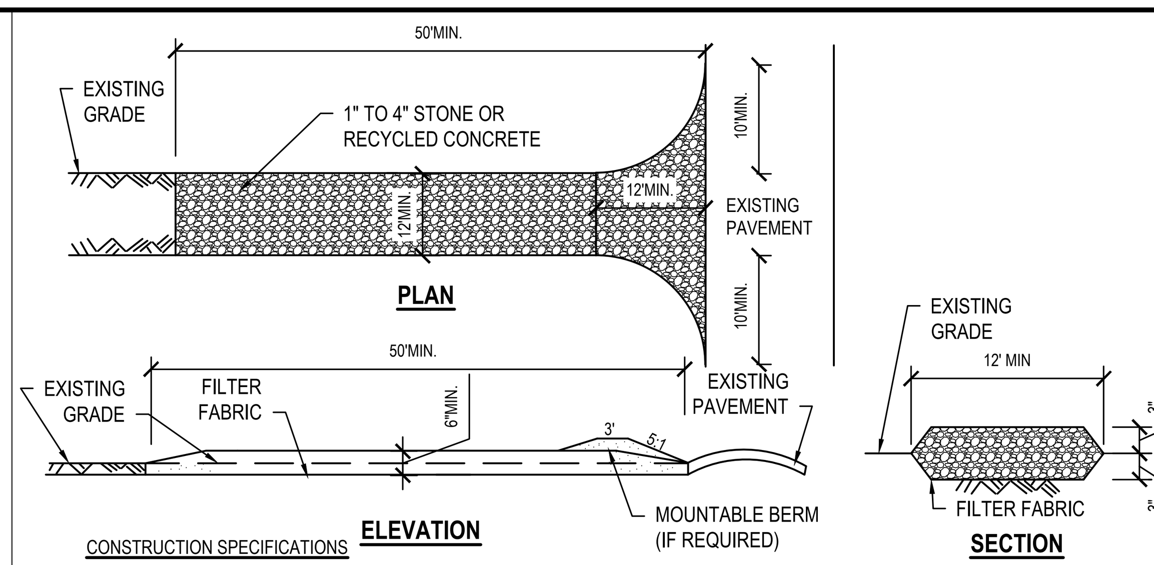

CONSTRUCTION SPECIFICATIONS

1. STONE OR RECYCLED CONCRETE SIZE TO BE 1" TO 4".
2. LENGTH - NOT LESS THAN 50 FEET (UNLESS INDICATED OTHERWISE ON PLANS).
3. THICKNESS - NOT LESS THAN SIX (6) INCHES.
4. WIDTH - TWELVE (12) FOOT MINIMUM, BUT NOT LESS THAN THE FULL WIDTH AT POINTS WHERE INGRESS OR EGRESS OCCURS. TWENTY-FOUR (24) FOOT IF SINGLE ENTRANCE TO SITE.
5. PLACE FILTER FABRIC OVER THE ENTIRE AREA PRIOR TO PLACING OF STONE. FILTER FABRIC TO BE TREVIRA SPUNBOND, 1135 MIRAFI 600X OR EQUIVALENT.
6. SURFACE WATER - ALL SURFACE WATER FLOWING OR DIVERTED TOWARD CONSTRUCTION ENTRANCES SHALL BE PIPED BENEATH THE ENTRANCE. IF PIPING IS IMPRACTICAL, A MOUNTABLE BERM WITH 5:1 SLOPES WILL BE PERMITTED.
7. MAINTENANCE - THE ENTRANCE SHALL BE MAINTAINED IN A CONDITION WHICH WILL PREVENT TRACKING OR FLOWING OF SEDIMENT ONTO PUBLIC RIGHTS-OF-WAY, ALL SEDIMENT SPILLED, DROPPED, WASHED OR TRACKED ONTO PUBLIC RIGHTS-OF-WAY MUST BE REMOVED IMMEDIATELY.
8. WHEN WASHING IS REQUIRED, IT SHALL BE DONE ON AN AREA STABILIZED WITH STONE AND WHICH DRAINS INTO AN APPROVED SEDIMENT TRAPPING DEVICE.
9. PERIODIC INSPECTION AND NEEDED MAINTENANCE SHALL BE PROVIDED AFTER EACH RAIN.

2 Stabilized Construction Entrance

SCALE: NTS (312513.19 NYDC1) - U

FILTER FABRIC PROPERTIES			
Mechanical Properties	Test Method	Units	MARV
Grab Tensile Strength	ASTM D 4632	lbs	365 x 200
Grab Tensile Elongation	ASTM D 4632	%	24 x 10
Puncture Strength	ASTM D 4833	lbs	90
Mullen Burst Strength	ASTM D 3786	psi	450
Trapezoid Tear Strength	ASTM D 4533	lbs	115 x 75
UV Resistence	ASTM D 4355	%	90
Apparent Opening Size	ASTM D 4751	US Std Sieve)	40
Flow Rate	ASTM D 4491	gal/min/ft^2	145
Permittivity	ASTM D 4491	Sec^{-1}	2.1

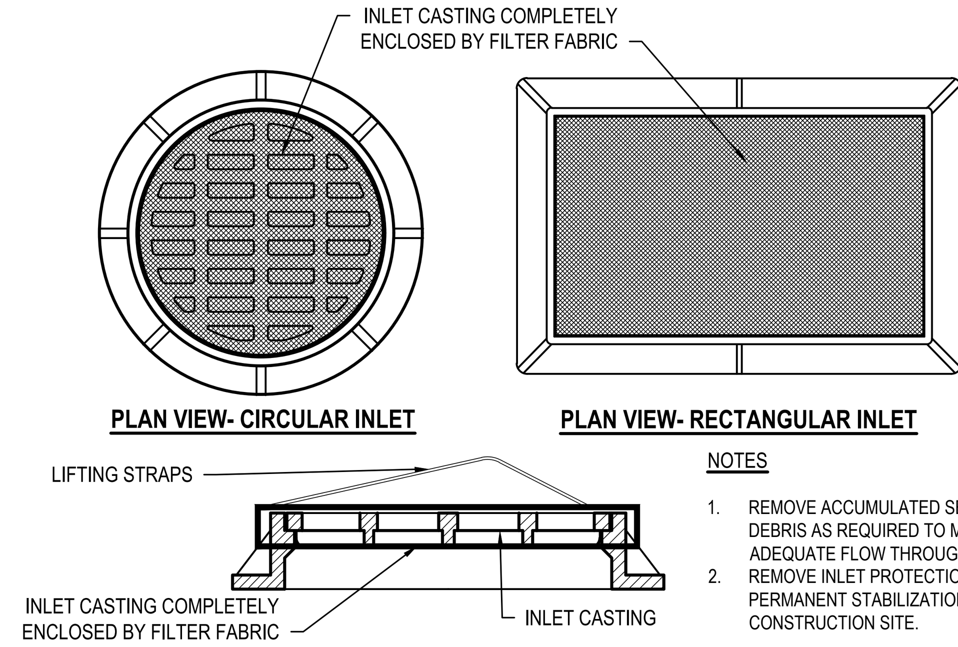

NOTES

1. REMOVE ACCUMULATED SEDIMENT AND DEBRIS AS REQUIRED TO MAINTAIN ADEQUATE FLOW THROUGH FILTER FABRIC.
2. REMOVE INLET PROTECTION UPON PERMANENT STABILIZATION OF CONSTRUCTION SITE.

3 Sediment Bag Inlet Protection

SCALE: NTS

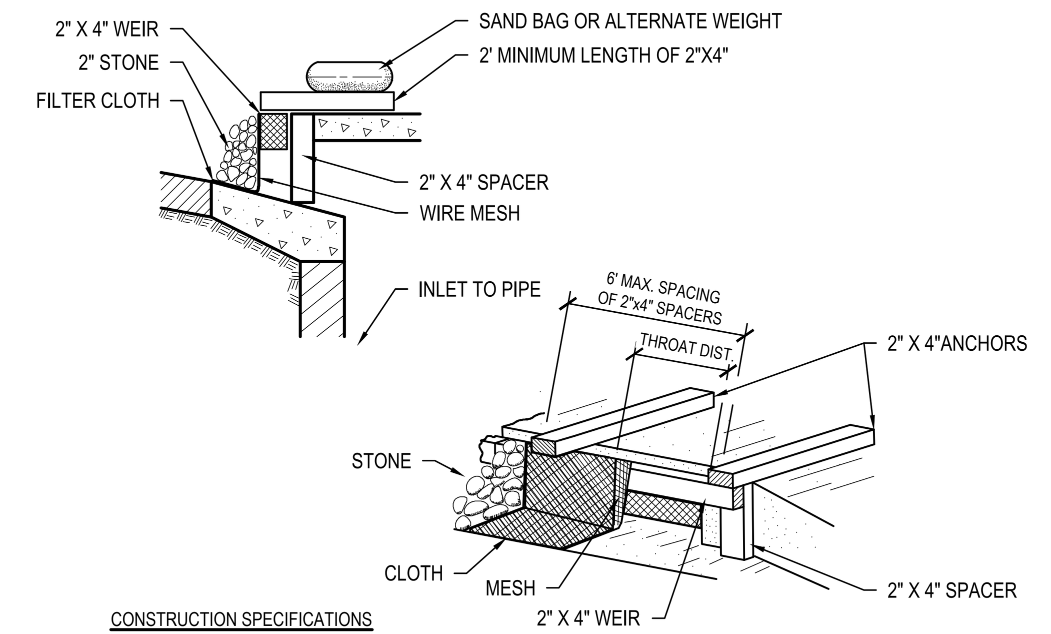

CONSTRUCTION SPECIFICATIONS

1. FILTER FABRIC SHALL HAVE AN EOS OF 40-85.
2. WOODEN FRAME SHALL BE CONSTRUCTED OF 2" x 4" CONSTRUCTION GRADE LUMBER
3. WIRE MESH ACROSS THROAT SHALL BE A CONTINUOUS PIECE 30 INCH MINIMUM WIDTH WITH A LENGTH 4 FEET LONGER THAN THE THROAT. IT SHALL BE SHAPED AND SECURELY NAILED TO A 2" x 4" WEIR.
4. THE WEIR SHALL BE SECURELY NAILED TO 2" x 4" SPACERS 9 INCHES LONG SPACED NO MORE THAN 6 FEET APART.
5. THE ASSEMBLY SHALL BE PLACED AGAINST THE INLET AND SECURED BY 2" x 4" ANCHORS 2 FEET LONG EXTENDING ACROSS THE TOP OF THE INLET AND HELD IN PLACE BY SANDBAGS OR ALTERNATE WEIGHTS.

MAXIMUM DRAINAGE AREA OF 1 ACRE

4 Curb Drop Inlet Protection

SCALE: NTS

NOTES:

1. AREA CHOSEN FOR STOCKPILING OPERATIONS SHALL BE DRY AND STABLE.
2. MAXIMUM SLOPE OF STOCKPILE SHALL BE 2:1.
3. UPON COMPLETION OF SOIL STOCKPILING, EACH PILE SHALL BE SURROUNDED WITH EITHER SILT FENCING OR STRAW BALES, THEN STABILIZED WITH VEGETATION OR COVERED.

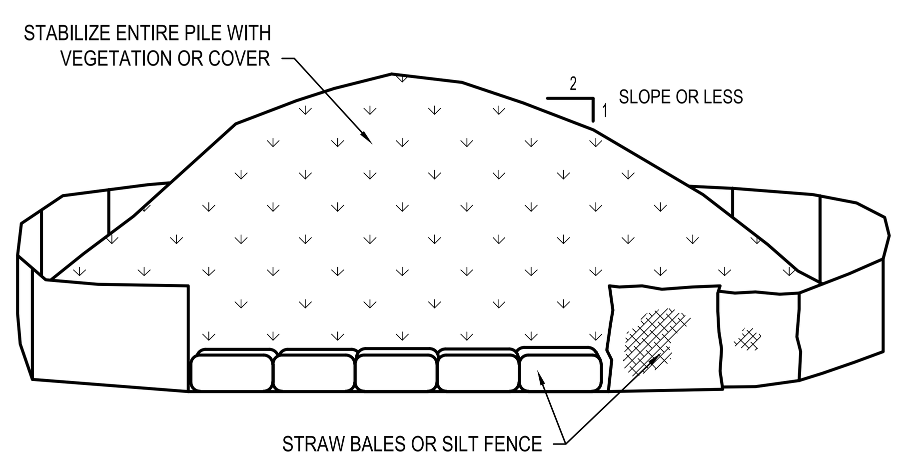

TO BE USED WHERE TOPSOIL IS NECESSARY FOR REGRADING AND VEGETATING DISTURBED AREAS. TEMPORARY STOCKPILE STABILIZATION MEASURES INCLUDE VEGETATIVE COVER, MULCH, NONVEGETATIVE COVER, AND PERIPHERAL SEDIMENT TRAPPING BARRIERS. THE STABILIZATION MEASURE(S) SELECTED SHOULD BE APPROPRIATE FOR THE TIME OF YEAR, SITE CONDITIONS, AND REQUIRED PERIOD OF USE.

5 Temporary Soil Stockpile

SCALE: NTS 312513.13 NYDC1-U

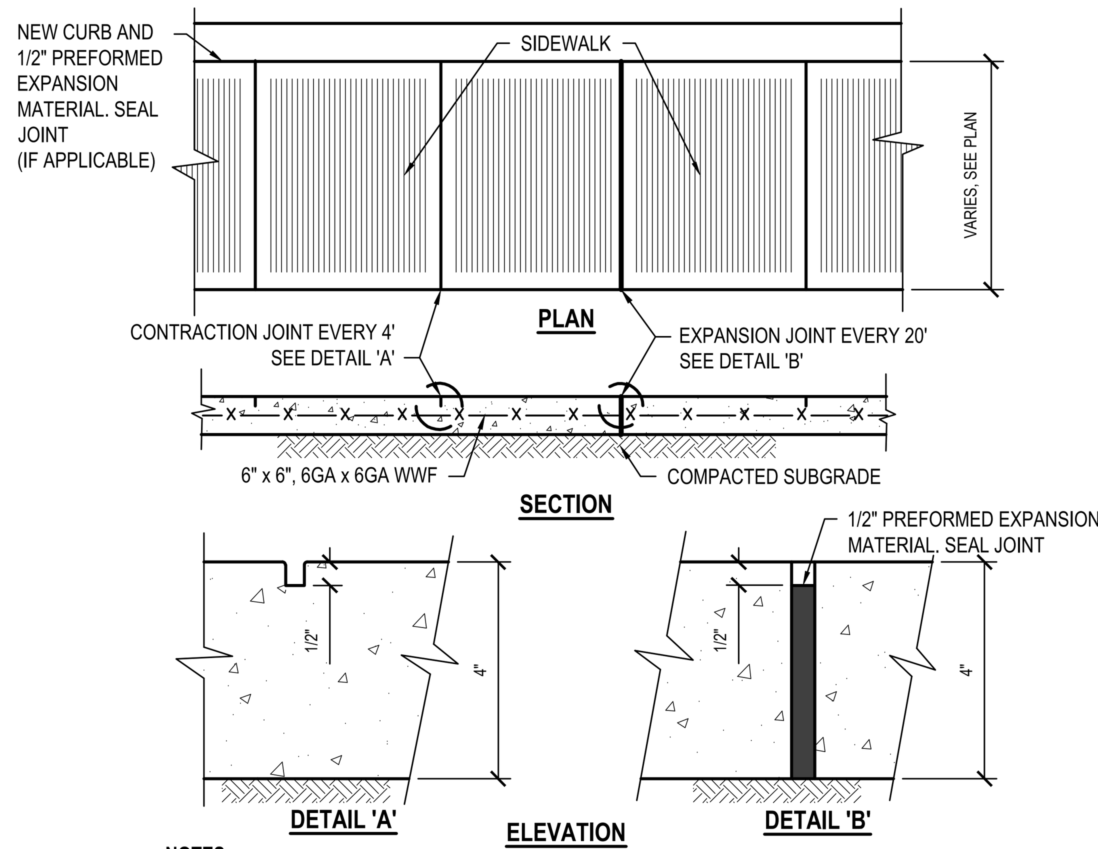

NOTES:

1. CONCRETE TO ACHIEVE 4000 PSI STRENGTH AT 28 DAYS
2. COMPACT SUBGRADE TO 92% MAXIMUM DENSITY IN ACCORDANCE WITH ASTM D1557.
3. APPLY BROOM FINISH PERPENDICULAR TO DIRECTION OF TRAVEL.
4. INSTALL EXPANSION MATERAL ALONG ALL AREAS OF SIDEWALK ADJACENT TO BUILDING.

6 Concrete Sidewalk

SCALE: NTS (321313.33 H2MX1) - U

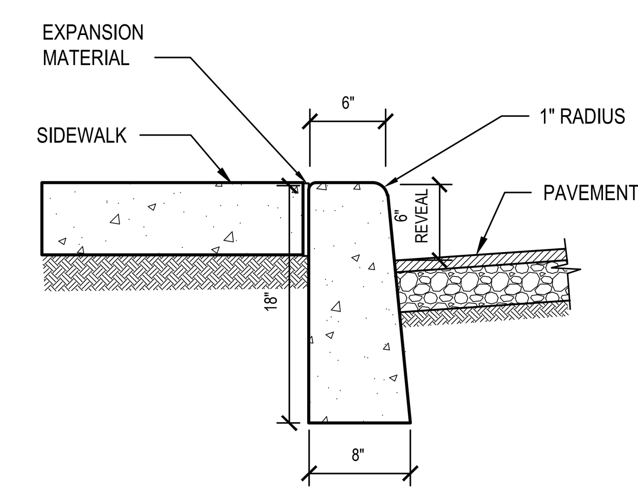

NOTES:

1. WOOD FLOAT AND BRUSH FINISH ON ALL SURFACES ABOVE GRADE.
2. AT ALL CURB ENDINGS, PROVIDE SMOOTH TRANSITION DOWN TO PAVED SURFACE.
3. PROVIDE 1/2" PREFORMED EXPANSION MATERIAL AT 20' ON CENTER AND AT ALL CORNERS. SET EXPANSION MATERIAL 1/2" BELOW EXPOSED SURFACES AND SEAL JOINT.
4. CONCRETE TO ACHIEVE 4,000 PSI STRENGTH AT 28 DAYS.

7 Concrete Curb

SCALE: NTS (321613.16 H2MX1)

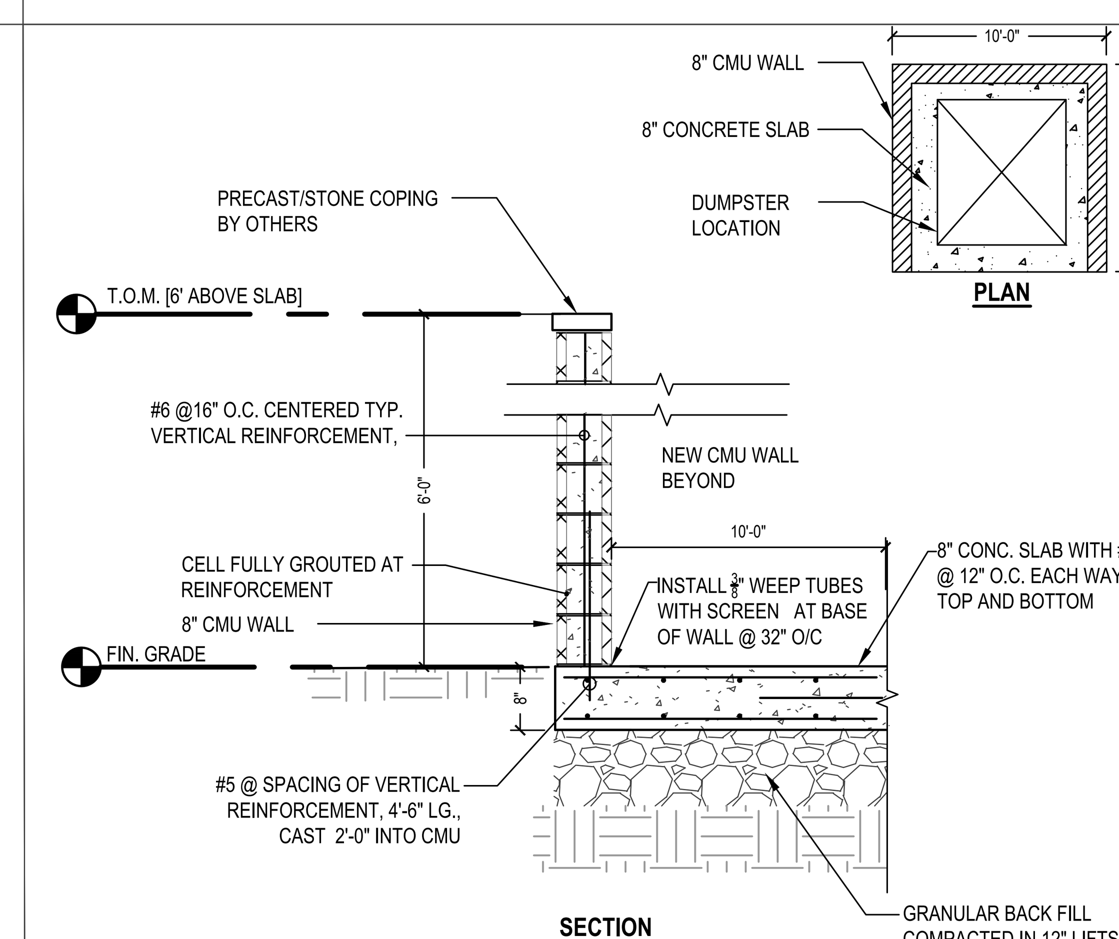

8 CMU Dumpster Enclosure

SCALE: NTS

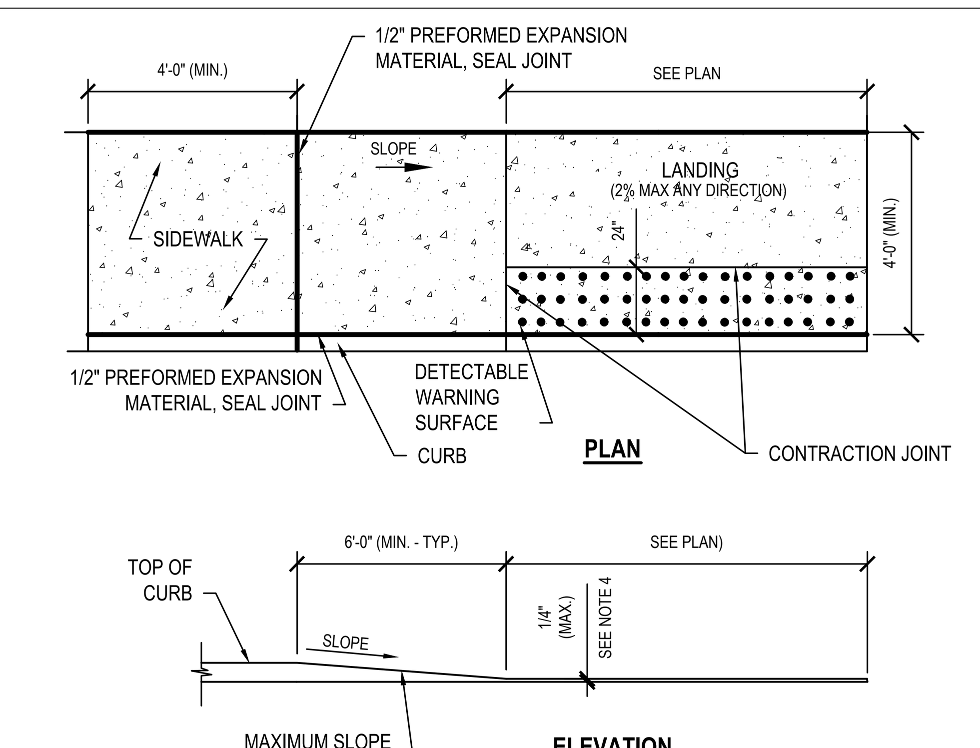

NOTES:

1. DIMENSIONS SHOWN ARE APPLICABLE FOR INSTALLATION WITH 6" CURB REVEAL. RAMP SLOPE NOT TO EXCEED 1:12.
2. THE SIZE OF THE DETECTABLE WARNING FIELD SHALL BE 24" IN THE DIRECTION OF TRAVEL AND SHALL EXTEND THE FULL WIDTH OF THE CURB RAMP EXCLUSIVE OF SIDE FLARES.
3. MAXIMUM SLOPE OF LANDING IS 2% IN ANY DIRECTION.
4. RAMP TRANSITIONS BETWEEN WALKS, GUTTERS, OR STREETS SHALL BE FLUSH AND FREE OF ABRUPT VERTICAL CHANGES (1/4" MAX)
5. CONCRETE TO ACHIEVE 4,000 P.S.I. STRENGTH AT 28 DAYS.
6. COMPACT SUBGRADE TO 92% MAXIMUM DENSITY IN ACCORDANCE WITH ASTM D1557.
7. APPLY BRUSH FINISH PERPENDICULAR TO DIRECTION OF SLOPE.
8. REFER TO CONCRETE SIDEWALK DETAIL FOR INFORMATION REGARDING CONTRACTION AND EXPANSION JOINTS.

9 Concrete Handicap Ramp

SCALE: NTS

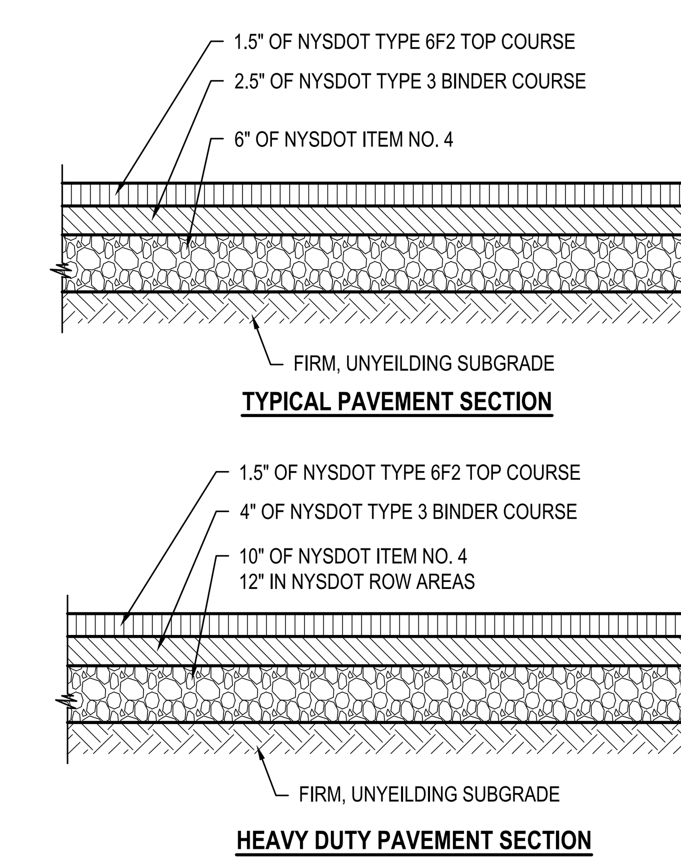

NOTES:

1. PROVIDE SMOOTH TRANSITION BETWEEN EXISTING AND PROPOSED ASPHALT PAVEMENT AREAS.
2. SEAL ALL JOINTS BETWEEN NEW ASPHALT AND EXISTING ASPHALT WITH JOINT ADHESIVE IN ACCORDANCE WITH NYSDOT SPECIFICATION No. 705-19.
3. ALL NEW ASPHALT PAVEMENT ONSITE TO COMPLY WITH TOWN OF VAILS GATE CODE.

10 Asphalt Pavement Section

SCALE: NTS

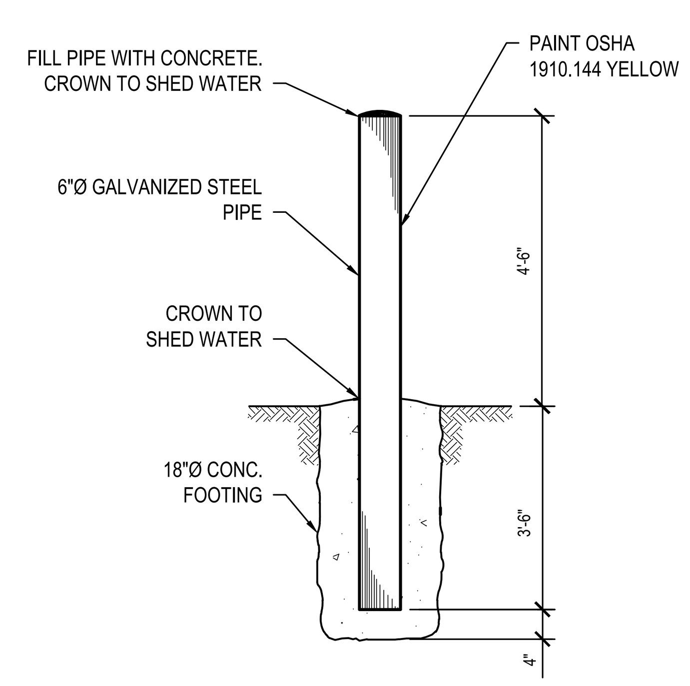

NOTE:

1. CONCRETE TO ACHIEVE 4,000 PSI STRENGTH AT 28 DAYS.

11 Steel Bollard - 6" Diameter

SCALE: NTS (323613.00 H2MX2)

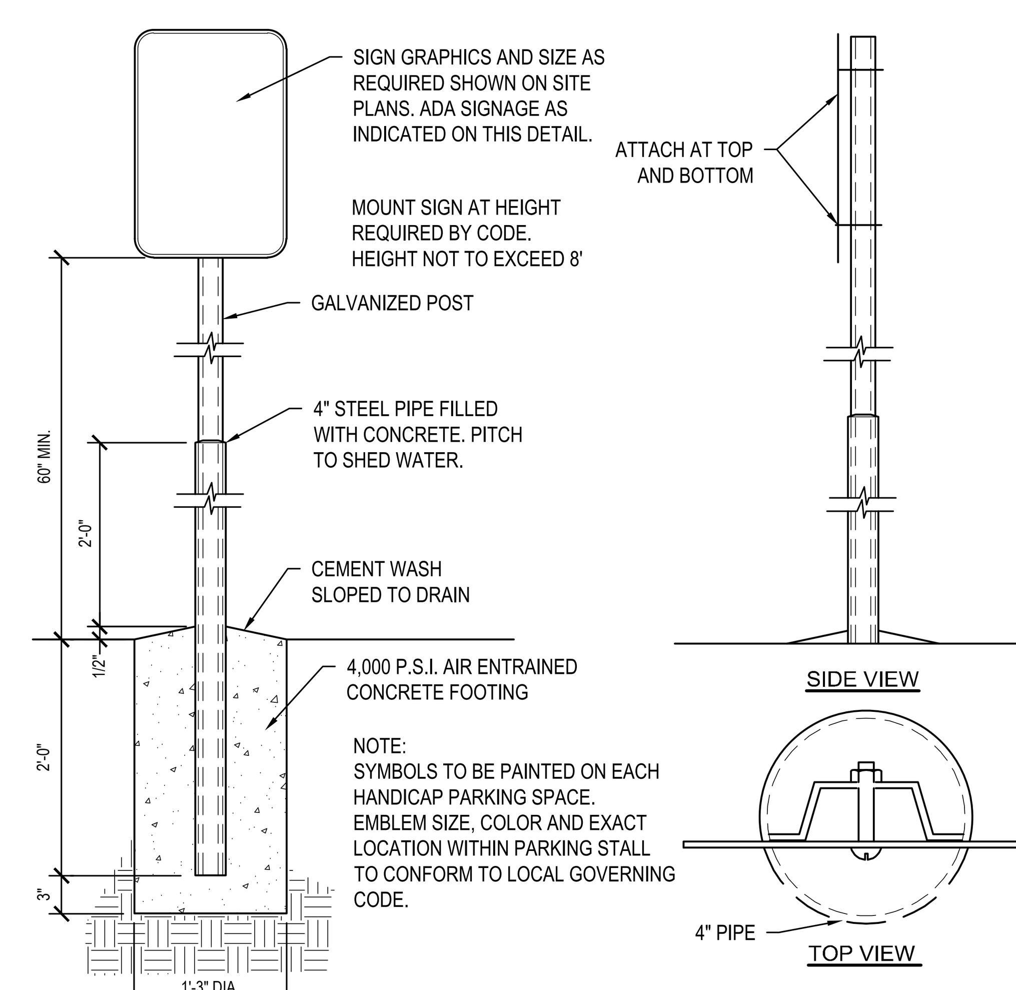

NOTE:
SYMBOLS TO BE PAINTED ON EACH HANDICAP PARKING SPACE. EMBLEM SIZE, COLOR AND EXACT LOCATION WITHIN PARKING STALL TO CONFORM TO LOCAL GOVERNING CODE.

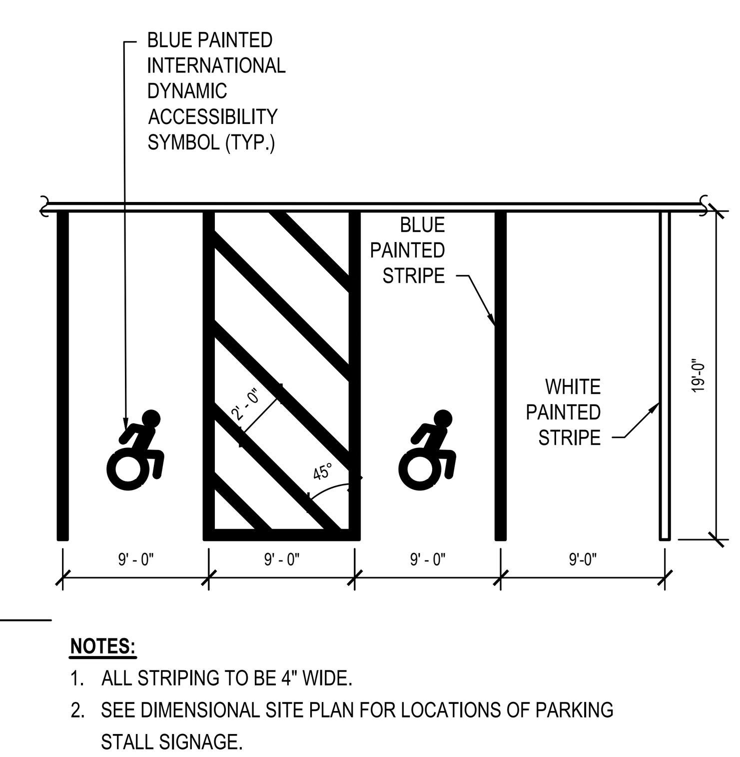

NOTES:

1. ALL STRIPING TO BE 4" WIDE.
2. SEE DIMENSIONAL SITE PLAN FOR LOCATIONS OF PARKING STALL SIGNAGE.

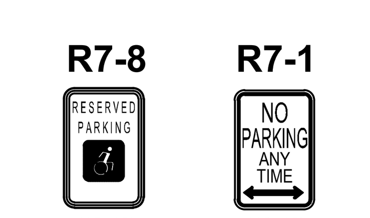

SIGNAGE DETAIL

NOTE: MOUNT ALL SIGNS AT HEIGHT REQUIRED BY CODE. HEIGHT NOT TO EXCEED 8'

12 Parking Stall Striping & Signage

SCALE: NTS

H2M architects + engineers

538 Broad Hollow Road, 4th Floor East
Melville, NY 11747
631.756.8000 ▪ www.h2m.com

CONSULTANTS:

MARK	DATE	DESCRIPTION

"ALTERATION OF THIS DOCUMENT EXCEPT BY A LICENSED PROFESSIONAL IS ILLEGAL"

DESIGNED BY:	DRAWN BY:	CHECKED BY:	REVIEWED BY:
SFP	SFP	MWK	KWS

PROJECT No.:	DATE:	SCALE:
VGFD 2001	JULY 2022	AS SHOWN

CLIENT

VAILS GATE FIRE DISTRICT

New Storage Building (Phase I)
New Fire Station (Phase II)

872 Blooming Grove Turnpike,
New Windsor, NY 12553

CONTRACT
CONTRACT G
GENERAL CONSTRUCTION

STATUS
FINAL BID DOCUMENT

SHEET TITLE
SITE DETAILS

DRAWING No.
C 500.00

X:\VGFD (Vails Gate Fire Dept)\VGFD2001-(Vails Gate FD-New Firehouse)\02-BIM-CADD\Con-docs\civil\08_C 500.00 Site Details.dwg Last Modified: Jul 18, 2022 - 7:32am Plotted on: Jul 18, 2022 - 9:31am By bleger

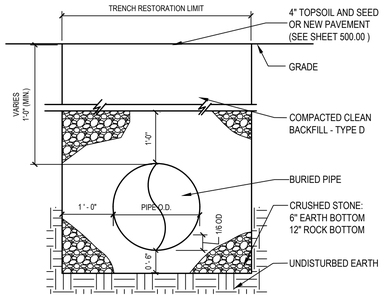

NOTE:

1. ALL TRENCH WIDTHS TO BE MINIMIZED IN ORDER TO AVOID EXCESSIVE DISTURBANCE OF ADJACENT AREAS. TRENCH WALLS SHALL BE VERTICAL WHERE NECESSARY, SHEET PILING OR A SHEETING BOX SHALL BE USED TO MAINTAIN THE SPECIFIED TRENCH.
2. IF DEPTH OF TRENCH EXCEEDS 5', THE CONTRACTOR SHALL PROVIDE SHEETING AND BRACING OR A SHEETING BOX IN ACCORDANCE WITH OSHA REGULATIONS.

1 Typical Pipe Trench Detail

SCALE: NTS

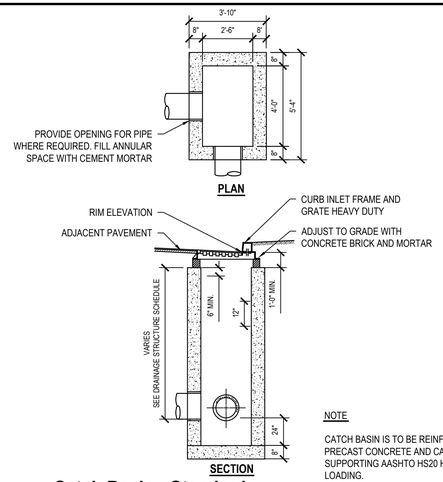

NOTE

CATCH BASIN IS TO BE REINFORCED PRECAST CONICRETE AND CAPABLE OF SUPPORTING AASHTO HS20 HIGHWAY LOADING.

2 Catch Basin - Standard

SCALE: NTS (334413.13 H2MX1)

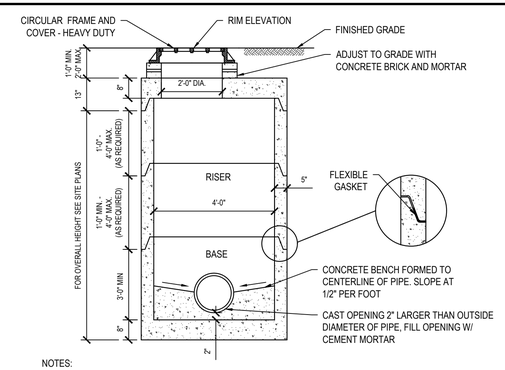

NOTES:

1. MANHOLE IS TO BE REINFORCED PRECAST CONCRETE AND CAPABLE OF SUPPORTING THE AASHTO HS-20 HIGHWAY LOADING.
2. MANHOLE CONSTRUCTION TO CONFORM TO ASTM C913
3. PROVIDE ADDITIONAL RISERS AS REQUIRED.
4. FLEXIBLE GASKET TO CONFORM TO THE REQUIREMENTS OF ASTM C990.

3 Drainage Manhole - 4 Foot Diameter

SCALE: NTS (334913.13 H2MX1)

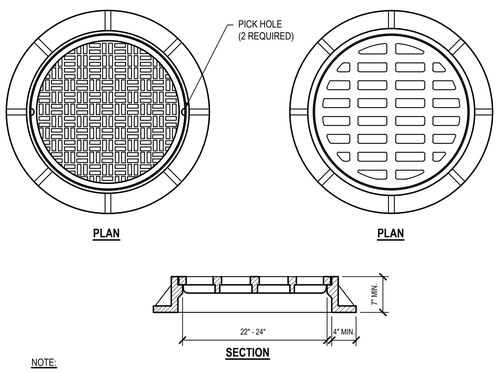

NOTE:

1. CASTINGS MUST BE CAST IRON CAPABLE OF SUPPORTING THE AASHTO HS-20 HIGHWAY LOADING. CAMPBELL FOUNDRY OR APPROVED EQUAL.
2. DMH-1 AND DMH-3 TO BE SOLID COVER CASTING. DMH-2 TO BE GRATE CASTING.
3. ALL DRAINAGE CASTINGS TO HAVE REQUIRED NOTATION "DUMP NO WASTE DRAINS TO WATERWAYS".

4 Circular Frame & Cover or Grate - Heavy Duty

SCALE: NTS (334913.23 H2WMX5-MOD)

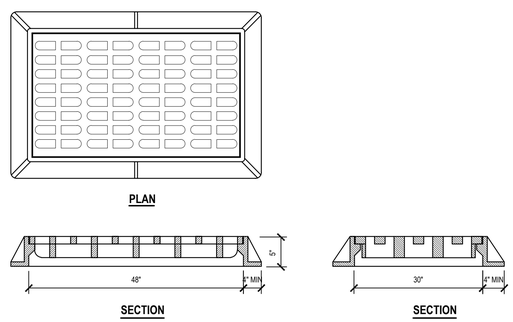

NOTES:

1. CASTING MUST BE CAST IRON AND CAPABLE OF SUPPORTING THE AASHTO HS-20 HIGHWAY LOADING.CAMPBELL FOUNDRY OR APPROVED EQUAL.
2. GRATE PATTERN TO BE BICYCLE- SAFE.
3. ALL DRAINAGE CASTINGS TO HAVE REQUIRED NOTATION "DUMP NO WASTE DRAINS TO WATERWAYS".

5 Rectangular Frame & Grate - Heavy Duty

SCALE: NTS (334913.23 H2MZ1)

1. ROOTBALL SHALL CONFORM TO THE CURRENT EDITION OF THE "AMERICAN STANDARD FOR NURSERY STOCK" (ASNS) FOR SIZE OF PLANT MATERIAL SPECIFIED.
2. THE SIDES OF EXCAVATED PLANTING PITS SHALL BE SCARIFIED TO AVOID MATTING OF SOIL LAYERS.
3. EXCAVATED PLANTING PIT SOIL SHALL BE EVALUATED FOR ORGANICS, pH, TEXTURE, ETC. AND SHALL BE AMENDED TO PROVIDE NEW PLANT MATERIAL WITH A PROPER SOIL ENVIRONMENT.
4. BACKFILL SOIL SHALL CONSIST OF EXCAVATED SOIL. IF EXISTING SOIL IS UNSUITABLE, AMEND WITH NEW ORGANIC TOPSOIL USING A 1:1 RATIO AND LOCALLY NATIVE MICORRHIZAL FUNGI AS PER MANUFACTURER'S INSTRUCTIONS.

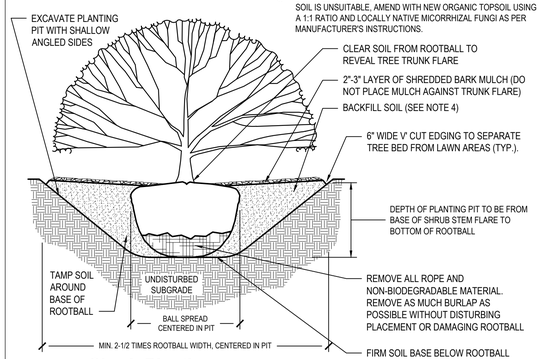

6 Shrub Planting

SCALE: NTS (329333.00 H2M X1)

1. ROOTBALL SHALL CONFORM TO THE CURRENT EDITION OF THE "AMERICAN STANDARD FOR NURSERY STOCK" (ASNS) FOR SIZE OF PLANT MATERIAL SPECIFIED.
2. THE SIDES OF EXCAVATED PLANTING PITS SHALL BE SCARIFIED TO AVOID MATTING OF SOIL LAYERS.
3. EXCAVATED PLANTING PIT SOIL SHALL BE EVALUATED FOR ORGANICS, pH, TEXTURE, ETC. AND SHALL BE AMENDED TO PROVIDE NEW PLANT MATERIAL WITH A PROPER SOIL ENVIRONMENT.
4. BACKFILL SOIL SHALL CONSIST OF EXCAVATED SOIL. IF EXISTING SOIL IS UNSUITABLE, AMEND WITH NEW ORGANIC TOPSOIL USING A 1:1 RATIO AND LOCALLY NATIVE MICORRHIZAL FUNGI AS PER MANUFACTURER'S INSTRUCTIONS.
5. TREES WILL HAVE A SINGLE LEADER AND BE GROWN ON THEIR OWN ROOTS. GRAFTED TREES OR WITH TWO OR MORE LEADERS WILL BE REJECTED.

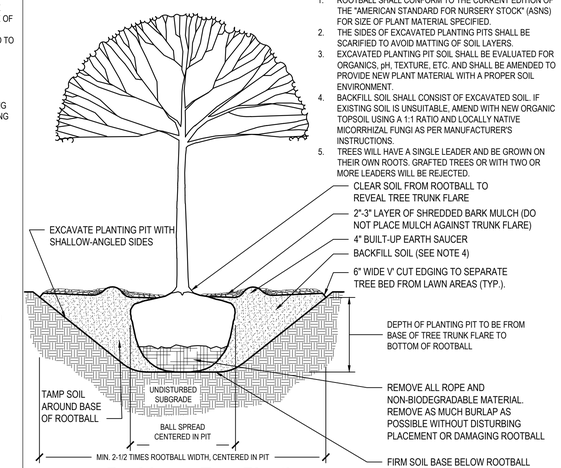

7 Deciduous Tree Planting

SCALE: NTS (329343.00 H2M X1)

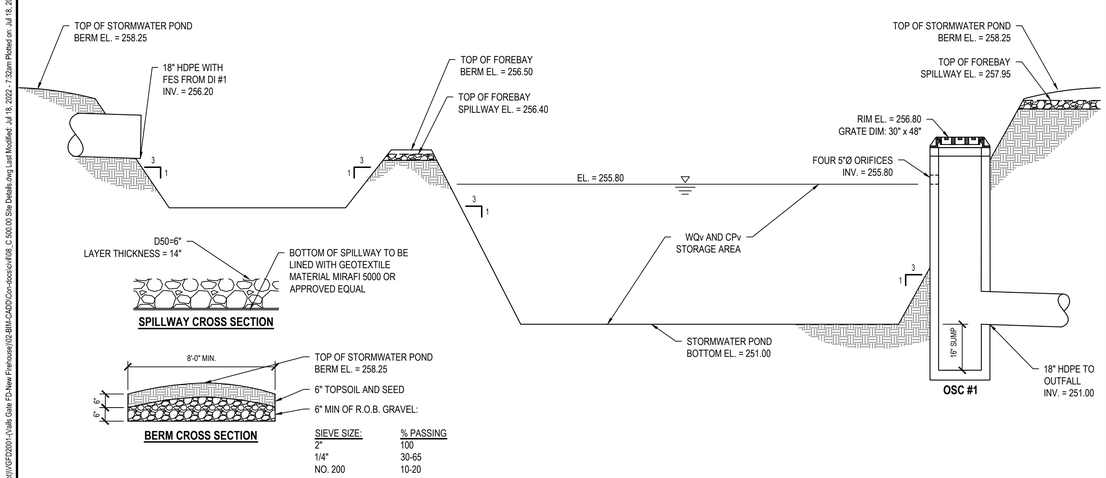

SIEVE SIZE:	% PASSING
2"	100
1/4"	30-65
NO. 200	10-20

8 Stormwater Pond Section

SCALE: NTS

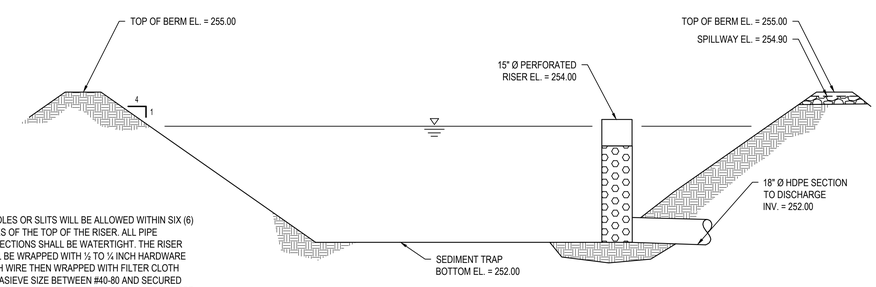

NOTES

1. NO HOLES OR SLITS WILL BE ALLOWED WITHIN SIX (6) INCHES OF THE TOP OF THE RISER. ALL PIPE CONNECTIONS SHALL BE WATERTIGHT. THE RISER SHALL BE WRAPPED WITH ½ TO ¼ INCH HARDWARE CLOTH WIRE THEN WRAPPED WITH FILTER CLOTH WITH ASIEVE SIZE BETWEEN #40-80 AND SECURED WITH STRAPPING OR CONNECTING BAND AT THE TOP AND BOTTOM OF THE CLOTH.
2. SEDIMENT TRAP IS DESIGNED TO ACCOMMODATE A CONTRIBUTING AREA OF APPROXIMATELY 1.12 ACRES.

9 Sediment Trap Section

SCALE: NTS

H2M architects + engineers

538 Broad Hollow Road, 4th Floor East
Melville, NY 11747
631.756.8000 • www.h2m.com

CONSULTANTS:

MARK	DATE	DESCRIPTION

STATE OF NEW YORK · MICHAEL WADE KEPPLER · 077701 · LICENSED PROFESSIONAL ENGINEER

"ALTERATION OF THIS DOCUMENT EXCEPT BY A LICENSED PROFESSIONAL IS ILLEGAL"

DESIGNED BY:	DRAWN BY:	CHECKED BY:	REVIEWED BY:
SFP	SFP	MWK	KWS

PROJECT No.:	DATE:	SCALE:
VGFD 2001	JULY 2022	AS SHOWN

CLIENT

VAILS GATE FIRE DISTRICT

New Storage Building (Phase I)
New Fire Station (Phase II)

872 Blooming Grove Turnpike, New Windsor, NY 12553

CONTRACT

CONTRACT G
GENERAL CONSTRUCTION

STATUS

FINAL BID DOCUMENT

SHEET TITLE

SITE DETAILS

DRAWING No.

C 501.00

X:\VGFD 1\Vails Gate Fire Dept\VGFD2001-1\Vails Gate FD-New Firehouse\02-BIM-CADD\Civil-docs\c408_C-500.00 Site Details.dwg Last Modified: Jul 18, 2022 - 7:32am Plotted on: Jul 18, 2022 - 9:28am By Heiger

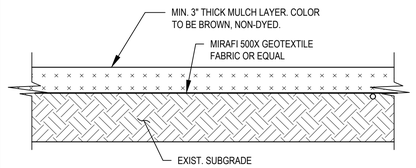

NOTES: **SECTION**

1. CONTRACTOR TO MATCH EXISTING GRADE UNLESS OTHERWISE NOTED.

1 3" Mulch Section
SCALE: NTS

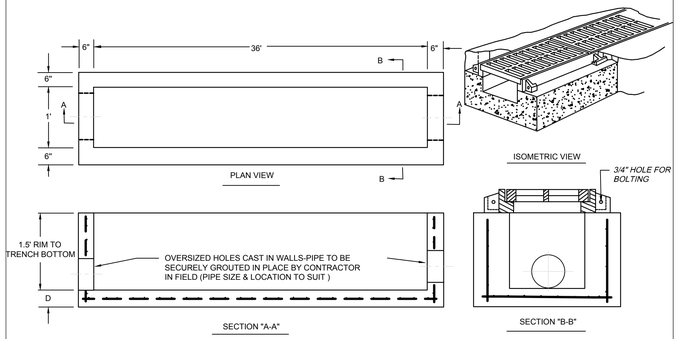

NOTE:

1. TRENCH DRAIN IS TO BE REINFORCED PRECAST CONCRETE AND CAPABLE OF SUPPORTING AASHTO HS20 HIGHWAY LOADING.
2. CONCRETE TO ACHIEVE 4,000 PSI AT 28 DAYS.
3. REINFORCEMENT PER MANUFACTURER SPECIFICATIONS

2 Trench Drain Detail
SCALE: NTS

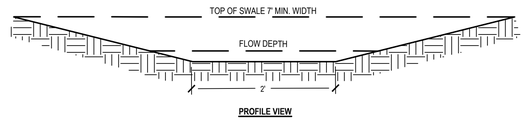

NOTES

1. BOTTOM WIDTH MINIMUM OF 2' AND NO GREATER THAN 6'.
2. SIDE SLOPES NO STEEPER THAN 3H:1V.
3. THE SWALE SHALL HAVE A SLOPE OF 0.7%.
4. MINIMUM FLOW LENGTH OF 100'.
5. MINIMUM OF 6 INCHES OF FREEBOARD REQUIRED BETWEEN THE FLOW DEPTH OF THE 10-YEAR STORM AND THE TOP OF THE SWALE.
6. SOIL RESTORATION IN ACCORDANCE WITH SECTION 5.1.6 OF THE NYS STORMWATER MANAGEMENT DESIGN MANUAL

INSPECTION AND MAINTENENCE

1. FERTILIZE AND LIME AS NEEDED TO MAINTAIN DENSE VEGETATION. MOW AS REQUIRED DURING THE GROWING SEASON TO MAINTAIN GRASS HEIGHTS AT 4 INCHES TO 6 INCHES.
2. REMOVE ANY SEDIMENT OR DEBRIS BUILDUP BY HAND IF POSSIBLE IN THE BOTTOM OF THE CHANNEL WHEN THE DEPTH REACHES 2 INCHES.
3. INSPECT FOR POOLS OF STANDING WATER. REGRADE TO RESTORE DESIGN GRADE AND REVEGETATE. REPAIR RILLS IN CHANNEL BOTTOM WITH COMPACTED TOPSOIL, ANCHORED WITH MESH OR FILTER FABRIC. SEED AND MULCH.
4. USE OF HEAVY EQUIPMENT FOR MOWING AND REMOVING PLANTS/DEBRIS SHOULD BE AVOIDED TO MINIMIZE SOIL COMPACTION. DISTURBED AREAS SHOULD BE STABILIZED WITH SEED AND MULCH, OR REVETMENT, AS NECESSARY.

3 Vegetated Swale
SCALE: NTS

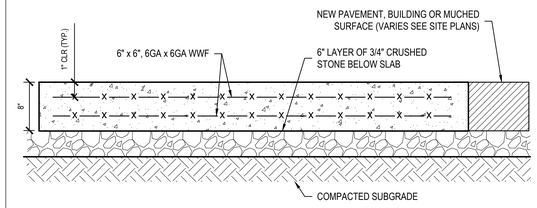

NOTES:

1. CONCRETE TO ACHIEVE 4000 PSI STRENGTH AT 28 DAYS
2. COMPACT SUBGRADE TO 92% MAXIMUM DENSITY IN ACCORDANCE WITH ASTM D1557.
3. APPLY BROOM FINISH PERPENDICULAR TO DIRECTION OF TRAVEL.
4. INSTALL EXPANSION MATERIAL ALONG ALL AREAS OF PAD BORDERING FINISHED SURFACES. REFER TO 'S' DRAWINGS FOR TRANSITION AT STORAGE BUILDING.

4 Storage Building Ext. Concrete Pad
SCALE: NTS

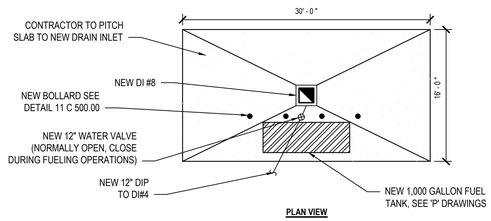

NOTE:

1. CONCRETE PAD SHALL BE A MINIMUM 8" THICK AND DESIGNED AND REINFORCED AS SHOWN IN THE REQUIREMENTS OF DETAIL 4 THIS SHEET.
2. THE CONTRACTOR SHALL PUT A SLIGHT UPWARD PITCH (<0.5%) ON THE RUN OF 12" DIP FROM DI#8 TO THE WATER VALVE. THIS WILL ALLOW CONTAMINANTS TO DRAIN BACK TO DI#4 DURING FUELING OPERATIONS. REMAINDER OF 12" DIP PIPE RUN TO DI#4 SHALL BE PITCH DOWNWARD AT 0.5% AS SHOWN ON SITE PLAN.

5 Fuel Island Containment Pad
SCALE: NTS

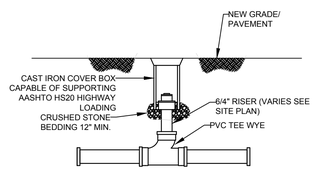

6 Typical Cleanout Detail
SCALE: NTS

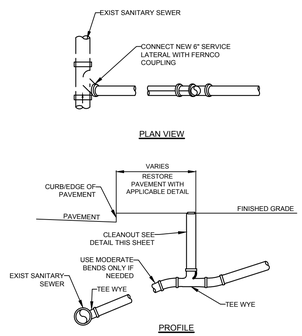

7 Sanitary House Connection
SCALE: NTS

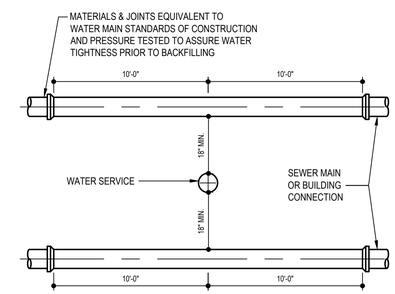

NOTE:

1. HORIZONTAL SEPARATION BETWEEN SEWER AND WATER LINES SHALL BE 10 FEET MINIMUM
2. VERTICAL AND HORIZONTAL SEPARATION DISTANCES SHALL BE MAINTAINED WHERE POSSIBLE. IF SEPARATION DISTANCES CAN NOT BE ACHIEVED REFER TO DETAIL 2 THIS SHEET.

8 Water/Sewer Crossing Detail
NTS

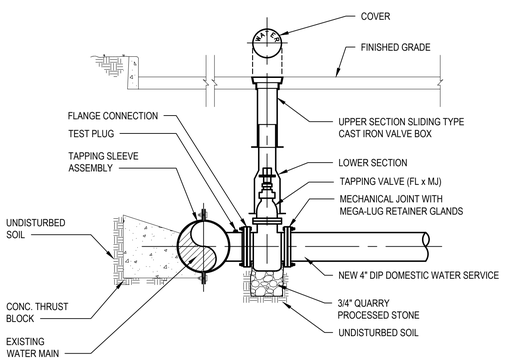

NOTE:

DETAIL PROVIDED IS FOR TYPICAL WET TAP CONNECTION. CONTRACTOR TO VERIFY THAT TAP AND ALL ASSOCIATED WORK AND MATERIALS ARE IN ACCORDANCE WITH THE TOWN OF NEW WINDOR CODE AND AS AUTHORIZED BY TOWN ENGINEER OR WATER AND SEWER OPERATOR.

9 Typical Wet Tap Connection
SCALE: NTS

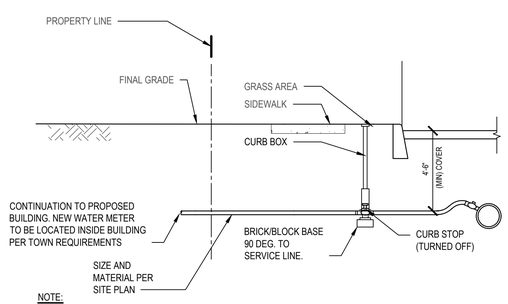

NOTE:

DETAIL PROVIDED IS FOR TYPICAL WATER SERVICE. CONTRACTOR TO VERIFY ALL ASSOCIATED WORK AND MATERIALS ARE IN ACCORDANCE WITH THE TOWN OF NEW WINDOR CODE AND AS AUTHORIZED BY TOWN ENGINEER OR WATER AND SEWER OPERATOR.

10 Typical New Water Service
SCALE: NTS

331417

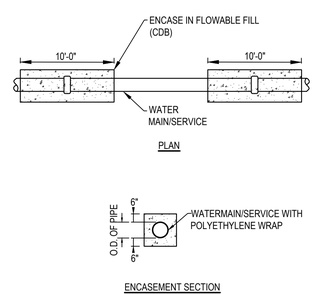

NOTE:

1. PROVIDE CONCRETE ENCASEMENT WHEN MINIMUM SEPARATION REQUIREMENTS CAN NOT BE MET OR AS DIRECTED BY OWNER OR ENGINEER.
2. HORIZONTAL SEPARATION BETWEEN WATER AND STORM OR SANITARY SHALL BE 10-FEET MINIMUM.
3. VERTICAL SEPARATION BETWEEN WATER AND STORM OR SANITARY SHALL BE 18-INCHES MINIMUM.

11 Concrete Encasement
SCALE: NTS

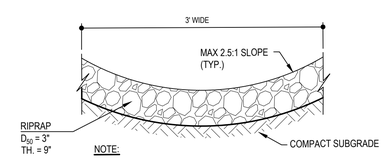

NOTE:

- UNSUITABLE SUBGRADE SHALL BE REMOVED AND REPLACED WITH DENSE GRADED AGGREGATE AS DIRECTED BY THE ENGINEER.

12 Rip-Rap Lined Swale
SCALE: NTS

H2M architects + engineers
538 Broad Hollow Road, 4th Floor East
Melville, NY 11747
631.756.8000 • www.h2m.com

CONSULTANTS:

MARK	DATE	DESCRIPTION

"ALTERATION OF THIS DOCUMENT EXCEPT BY A LICENSED PROFESSIONAL IS ILLEGAL"

DESIGNED BY:	DRAWN BY:	CHECKED BY:	REVIEWED BY:
SFP	SFP	MWK	KWS
PROJECT No.: VGFD 2001	DATE: JULY 2022		SCALE: AS SHOWN

CLIENT

VAILS GATE FIRE DISTRICT

New Storage Building (Phase I)
New Fire Station (Phase II)

872 Blooming Grove Turnpike, New Windsor, NY 12553

CONTRACT

CONTRACT G
GENERAL CONSTRUCTION

STATUS

FINAL BID DOCUMENT

SHEET TITLE

SITE DETAILS

DRAWING No.

C 502.00

X:\VGFD\Vails Gate Fire Dept\VGFD2001-\Vails Gate FD-New Firehouse\02.BIM-CADD\Con-docs\cd\C8_C 500.00 Site Details.dwg Last Modified: Jul 18, 2022 - 7:32am Plotted on: Jul 18, 2022 - 9:26am By:jhager

PHASE I

NEW STORAGE BUILDING

(ADD ALTERNATE #1, U.N.O.)

H2M architects + engineers

538 Broad Hollow Road, 4th Floor East
Melville, NY 11747
631.756.8000 • www.h2m.com

CONSULTANTS:

MARK	DATE	DESCRIPTION

REGISTERED ARCHITECT ROBERT BEE 032389 STATE OF NEW YORK

*ALTERATION OF THIS DOCUMENT EXCEPT BY A LICENSED PROFESSIONAL IS ILLEGAL.

DESIGNED BY:	DRAWN BY:	CHECKED BY:	REVIEWED BY:
KEM	JHG		

PROJECT No:	DATE:	SCALE:
VGFD2001	JULY 2022	AS SHOWN

CLIENT

VAILS GATE FIRE DISTRICT

New Storage Building (Phase I)
New Fire Station (Phase II)

872 Blooming Grove Turnpike
New Windsor, NY 12553

CONTRACT

CONTRACT G
GENERAL CONSTRUCTION

STATUS

FINAL BID DOCUMENT

SHEET TITLE

COVER
NEW STORAGE BUILDING
PHASE 1

DRAWING No.

A1 001.00

C:\Users\jguzman\Documents\VGFD2001_Central21_A_jguzman.rvt

7/18/2022 8:17:07 AM

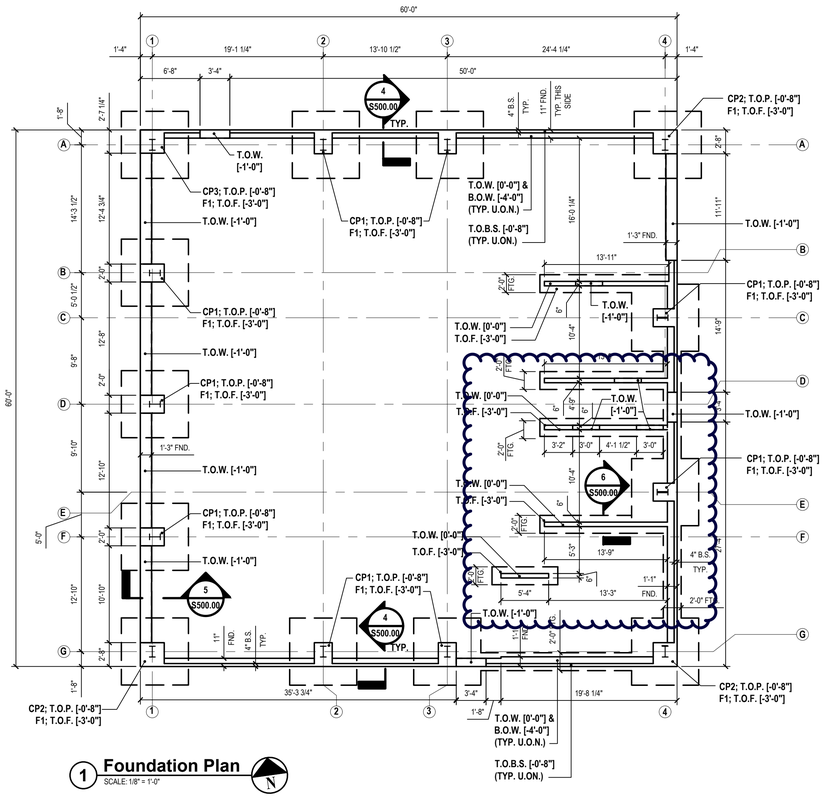

1 Foundation Plan
SCALE: 1/8" = 1'-0"

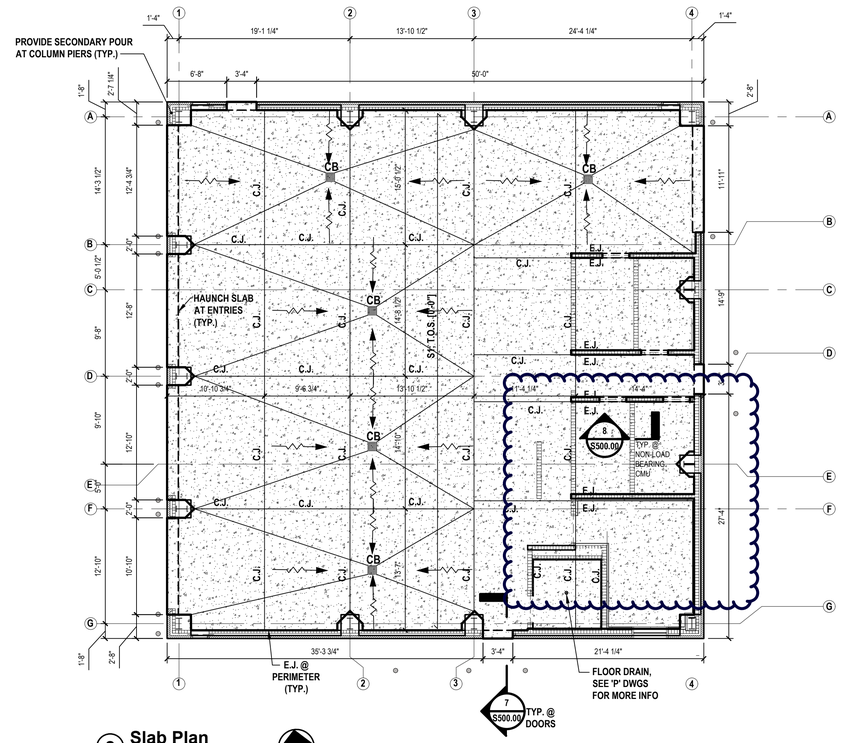

2 Slab Plan
SCALE: 1/8" = 1'-0"

LEGEND:

T.O.P.	= TOP OF PIER
T.O.W.	= TOP OF WALL
T.O.B.S.	= TOP OF BRICK SHELF
B.O.W.	= BOTTOM OF WALL
T.O.F.	= TOP OF FOOTING
T.O.S.	= TOP OF SLAB
E.J.	= EXPANSION JOINT
C.J.	= CONTROL JOINT
C.B.	= CATCH BASIN
U.O.N.	= UNLESS OTHERWISE NOTED

S1 = INDICATES SPAN OF 8" CONCRETE SLAB ON GRADE REINFORCED W/ (2) LAYERS OF 6x6 - W4.0xW4.0 W.W.F.

S2 = INDICATES SPAN OF 5" CONCRETE SLAB REINFORCED W/ 6x6-W1.4xW1.4 W.W.F. AND 3VLI-36 16GA COMPOSITE METAL FORM DECK AS MANUFACTURED BY VULCRAFT NUCOR OR APPROVED EQUAL.

= INDICATES 1/8:12 SLAB PITCH

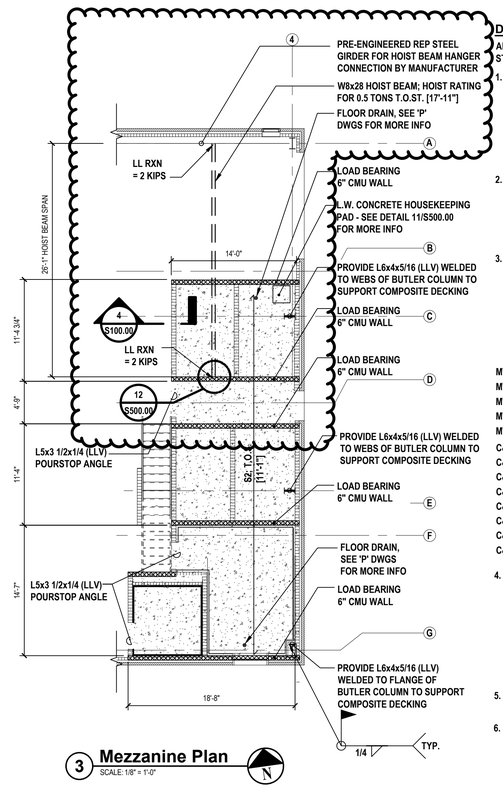

3 Mezzanine Plan
SCALE: 1/8" = 1'-0"

DESIGN CRITERIA:

ALL DESIGN LOADS ARE IN ACCORDANCE WITH 2020 BC-NYS AND ASCE 7-16
STRUCTURAL OCCUPANCY (RISK) CATEGORY IV

1. BUILDING DESIGN LOADS

FIRST FLOOR LIVE LOAD:	100 PSF
FIRST FLOOR COLLATERAL DEAD LOAD:	10 PSF
MEZZANINE LIVE LOAD:	125 PSF
MEZZANINE DEAD LOAD:	50 PSF
ROOF LIVE LOAD:	20 PSF
ROOF DEAD LOAD:	PERFORMED BY BUTLER BUILDING
ROOF COLLATERAL DEAD LOAD:	10 PSF

2. SNOW LOADS

GROUND SNOW LOAD:	Pg = 30 PSF
EXPOSURE FACTOR:	Ce = 1.0
THERMAL FACTOR:	Ct = 1.0
IMPORTANCE FACTOR:	Is = 1.20
FLAT ROOF SNOW LOAD:	Pf = 24 PSF

3. WIND LOADS:

BASIC WIND SPEED:	125 MPH
EXPOSURE:	B
EXPOSURE ADJUSTMENT FACTOR:	1.0
INTERNAL PRESSURE COEFFICIENT:	Gcp = ±0.18 (ENCLOSED BLDG)

	EXPOSURE B WIND LOADS		EXPOSURE ADJUSTMENT COEFFICIENT		ASD DESIGN WIND LOADS
MWFRS WALL (END ZONE)	34.3 PSF	x	1.0	=	34.3 PSF
MWFRS WALL (INT. ZONE)	22.9 PSF	x	1.0	=	22.9 PSF
MWFRS ROOF (END ZONE)	-9.1 PSF	x	1.0	=	-9.1 PSF
MWFRS ROOF (INT. ZONE)	-5.0 PSF	x	1.0	=	-5.0 PSF
MWFRS ROOF (UPLIFT)	-29.8 PSF	x	1.0	=	-29.8 PSF
C&C (END WALL PRESSURE)	28.15 PSF	x	1.0	=	28.15 PSF
C&C (END WALL SUCTION)	-37.7 PSF	x	1.0	=	-37.7 PSF
C&C (INT. WALL PRESSURE)	28.15 PSF	x	1.0	=	28.15 PSF
C&C (INT. WALL SUCTION)	-30.55 PSF	x	1.0	=	-30.55 PSF
C&C (END ROOF PRESSURE)	17.05 PSF	x	1.0	=	17.05 PSF
C&C (END ROOF SUCTION)	-75.85 PSF	x	1.0	=	-75.85 PSF
C&C (INT. ROOF PRESSURE)	17.05 PSF	x	1.0	=	17.05 PSF
C&C (INT. ROOF SUCTION)	-52.05 PSF	x	1.0	=	-52.05 PSF

4. SEISMIC CRITERIA:

SITE CLASS: C	
IMPORTANCE FACTOR	Ie = 1.50
Ss =0.242g	S1 = 0.058g
Fa = 1.30	Fv = 1.50
Sms = 0.314g	Sm1 = 0.086g
Sds = 0.209g	Sd1 = 0.058g
SEISMIC DESIGN CATEGORY: C	

5. ALLOWABLE SOIL BEARING CAPACITY = 4,000 PSF; AS PER CARLIN SIMPSON & ASSOCIATES GEOTECHNICAL REPORT DATED 3/12/2021

6. ANY BUILDING COMPONENTS NOTED AS DELEGATED DESIGN ITEMS IN DRAWINGS AND/OR SPECIFICATIONS SHALL BE DESIGNED IN ACCORDANCE WITH MINIMUM LOADS SPECIFIED ABOVE. ANY DEVIATION FROM NOTED LOAD VALUES SHALL BE SUBMITTED BY CONTRACTOR FOR REVIEW AND APPROVAL TO EOR PRIOR TO SUBMITTING SHOP DRAWINGS AND CALCULATIONS.

FOUNDATION PLAN NOTES:

1. DATUM FOR ALL ELEVATIONS SHOWN ON THIS PLAN ARE SET RELATIVE TO FINISHED FIRST FLOOR ELEVATION [261.00'].
2. ALL CONCRETE PEDESTALS SHALL BE SIZED AS SHOWN IN THE COLUMN PIER SCHEDULE AND CONSTRUCTED AS PER DETAIL 2/S500.00 UNLESS OTHERWISE NOTED.
3. ALL EXCAVATED EARTH SHALL BE REPLACED WITH CONTROLLED FILL AS PER SPECIFICATION 312323. AS STATED IN GEOTECHNICAL REPORT, COMPLETELY REMOVE & REPLACE EXISITING FILL THROUGHOUT BUILDING EXTENTS DOWN TO A DEPTH RANGING FROM 5'-0" TO 8'-5" BELOW EXISTING GROUND SURFACE.
4. CONTRACTOR SHALL COORDINATE SIZES AND LOCATIONS OF ALL REQUIRED PIPING AND CONDUIT PENETRATION WALL WITH ALL OTHER WORK. PROVIDE PIPE SLEEVES AND REINFORCEMENT AROUND PENETRATIONS AS PER DETAIL 9 ON S500.00.
5. REFER TO 'FOOTING SCHEDULE' FOR FOOTING SIZE AND REINFORCEMENT REQUIREMENTS.
6. COORDINATE LOCATIONS OF REINFORCEMENT DOWELS INTO BUILDING WALLS WITH MASONRY TRADE.
7. REFER TO 'A' DWGS FOR WATERPROOFING AND INSULATION REQUIREMENTS.
8. REFER TO THE PROJECT SPECIFICATION SECTION 133419 FOR METAL BUILDING LOAD REQUIREMENTS NOT OUTLINED.
9. GRID LOCATIONS AND DESIGNATIONS ARE SHOWN FOR REFERENCE. INDIVIDUAL COLUMN SIZES, LOCATIONS, AND ANCHOR BOLT OFFSETS SHALL BE ESTABLISHED FROM THE FOUNDATION EDGE AS PER THE APPROVED BUILDING MANUFACTURER'S DETAILS. ANCHOR BOLT SIZES, LOCATIONS, & EMBEDMENT SHALL BE PROVIDED BY BUTLER MANUFACTURING.
10. CONTRACTOR SHALL COORDINATE INSTALLATION OF ANCHOR BOLTS WITH LAYOUT PER BUILDING MANUFACTURER'S DETAILS. THE CONTRACTOR SHALL COORDINATE THE REQUIRED ANCHOR BOLT AND ADHESIVE TYPES ALONG WITH NECESSARY EMBEDMENT DEPTH OF ANCHOR, WITH RESPECT TO THE BUILDING COLUMN AXIAL AND SHEAR REACTIONS, WITH CONSIDERATION FOR CAPACITY REDUCTION DUE TO ANCHOR EDGE DISTANCE. CALCULATIONS FOR ADHESIVE ANCHOR INSTALLATION SHALL BE PREPARED UNDER THE SUPERVISION OF A NEW YORK STATE PROFESSIONAL ENGINEER AND SHALL BE SUBMITTED TO E/A OF RECORD FOR APPROVAL.

SLAB PLAN NOTES:

1. DATUM FOR ALL ELEVATIONS SHOWN ON THIS PLAN ARE SET RELATIVE TO FINISHED FIRST FLOOR ELEVATION [261.00'].
2. PROVIDE 1/2" PRE-MOLDED EXPANSION JOINT AROUND PERIMETER OF CONCRETE SLAB ON GRADE WHERE IT ABUTS THE FOUNDATION WALL OF THE BUILDING.
3. COORDINATE DIMENSIONS OF STAIR LANDING FRAMING WITH STAIR MANUFACTURER. SEE 'A' DWGS FOR ADDITIONAL INFORMATION.

MASONRY NOTES:

1. ALL VERTICAL MASONRY WALL REINFORCEMENT SHALL BE #5 BARS SPACED AT 48" O.C., TYP. UNLESS OTHERWISE NOTED.
2. THE FIRST CELL ADJACENT TO MASONRY OPENINGS, AS WELL AS ALL CORNERS, SHALL CONTAIN (1) CONT. #5 BAR, TYP. AT EACH SIDE OF OPENING.
3. FILL ALL MASONRY CELLS CONTAINING REINFORCEMENT SOLID WITH MORTAR, TYP.
4. ALL VERTICAL REINFORCEMENT INTERRUPTED BY STRUCTURAL STEEL SHALL BE WELDED TO TOP OF STEEL MEMBERS, TYP.
5. COORDINATE PLACEMENT OF VERTICAL WALL DOWELS EMBEDDED INTO FOUNDATION WALL WITH CELLS OF MASONRY WALL. DOWEL SPACING TO MATCH SPACING OF VERTICAL REINFORCEMENT IN WALLS, TYP.

COLUMN PIER SCHEDULE

DESIGNATION	SIZE	REINFORCEMENT	TIES
CP1	24"x32"	(3) #6 BARS E-W FACE (4) #6 BARS N-S FACE (10 BARS TOTAL)	#3 BARS @ 12" O.C.
CP2	32"x32"	(4) #6 BARS E-W FACE (4) #6 BARS N-S FACE (12 BARS TOTAL)	#3 BARS @ 12" O.C.
CP3	31.25"x32"	(4) #6 BARS E-W FACE (4) #6 BARS N-S FACE (12 BARS TOTAL)	#3 BARS @ 12" O.C.

FOOTING SCHEDULE

MARK	SIZE	THICKNESS	REINFORCEMENT	LOCATIONS
F1	7'-6"x7'-6"	12"	(7) #5 BARS E.W. BOTT.	SEE FND. PLAN

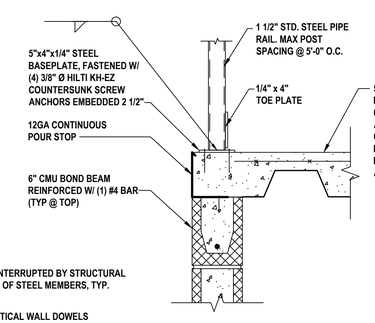

4 Typical Mezzanine Guardrail
SCALE: 1/2"=1'-0"

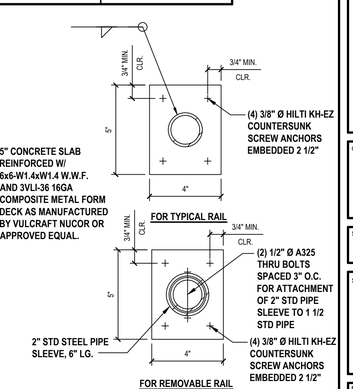

NOTE: REFER TO 'A' DWGS FOR REMOVABLE RAIL LOCATION

H2M architects + engineers
538 Broad Hollow Road, 4th Floor East
Melville, NY 11747
631.756.8000 • www.h2m.com

CONSULTANTS:

MARK	DATE	DESCRIPTION
2	12/22/2022	REVS. PER TOWN COMMENTS

STATE OF NEW YORK · KATIA DUQUE · 071436 · LICENSED PROFESSIONAL ENGINEER

"ALTERATION OF THIS DOCUMENT EXCEPT BY A LICENSED PROFESSIONAL IS ILLEGAL"

DESIGNED BY:	DRAWN BY:	CHECKED BY:	REVIEWED BY:
MDH	MDH		
PROJECT No.: VGFD2001	DATE: JULY 2022	SCALE: AS SHOWN	

CLIENT
VAILS GATE FIRE DISTRICT

New Storage Building (Phase I)
New Fire Station (Phase II)

872 Blooming Grove Turnpike
New Windsor, NY 12553

CONTRACT
CONTRACT G
GENERAL CONSTRUCTION

STATUS
FINAL BID DOCUMENT

SHEET TITLE
FOUNDATION, FIRST FLOOR SLAB, & MEZZANINE CONSTRUCTION PLANS

DRAWING No.
S1 100.02

\\h2m.com\shares\Projects\VGFD\Vails Gate Fire Dept\VGFD2001-Vails Gate FD-New Firehouse\02-BIM-CADD\Cons-docs\structural\S100.00.dwg Last Modified: Jan 24, 2023 - 10:31am Plotted on: Feb 15, 2023 - 11:34am By: jschever

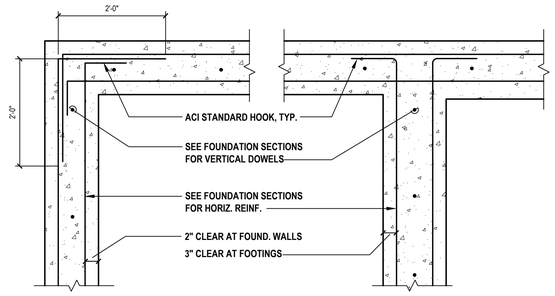

1 Typical Corner Horizontal Reinforcement at Foundation Wall or Footing
SCALE: N.T.S.

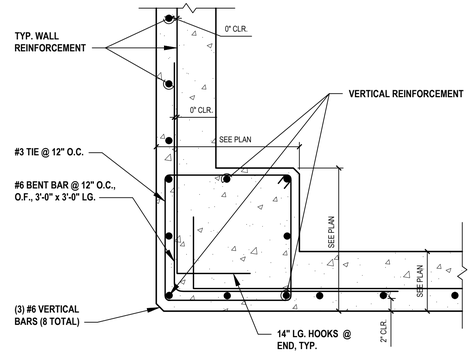

2 Typical Corner Pier/Foundation Wall Intersection
SCALE: N.T.S.

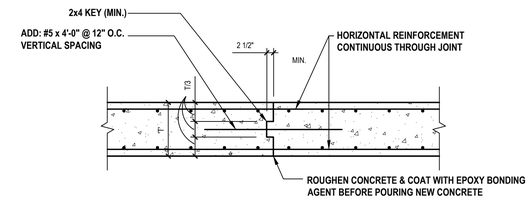

VERTICAL CONSTRUCTION JOINT IN WALL

NOTES:

1. KEY WIDTH NOT TO EXCEED 1/3 WIDTH OF WALL. VERTICAL CONSTRUCTION JOINT PERMITTED IN WALL OR GRADE AT ANY POINT 4'-0" MIN. AWAY FROM FACE OF SUPPORTING PIER, BUTTRESS AND/OR WALL OPENING. PROVIDE ONE VERTICAL CONSTRUCTION JOINT FOR EVERY 40'-0" OF A STRAIGHT RUN OF WALL.
2. SUBMIT CONSTRUCTION JOINT LAYOUT FOR ALL CONCRETE STRUCTURES FOR ENGINEER'S REVIEW.

3 Construction Joint Detail
SCALE: N.T.S.

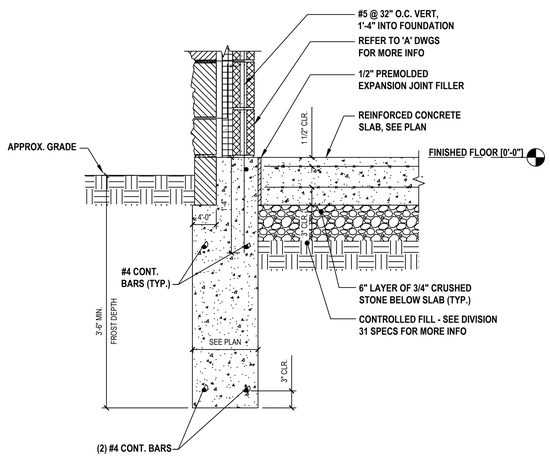

4 Typical Exterior Foundation Wall
SCALE: N.T.S.

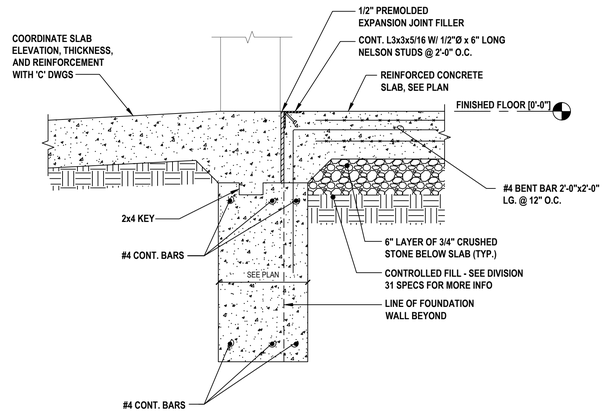

5 Typical Section at Truck Apron
SCALE: N.T.S.

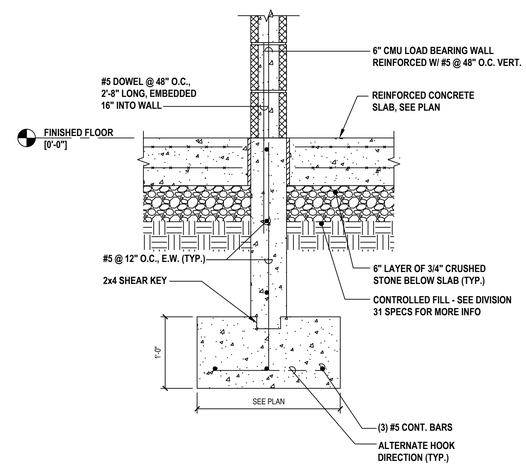

6 Typical Interior Load Bearing Foundation
SCALE: N.T.S.

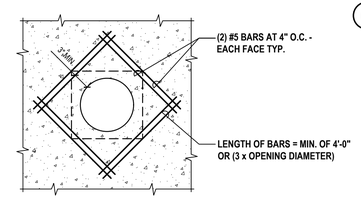

9 Typical Pipe Penetration at Wall or Slab
SCALE: N.T.S.

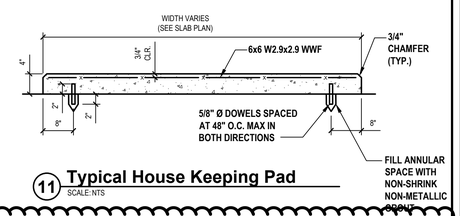

11 Typical House Keeping Pad
SCALE: NTS

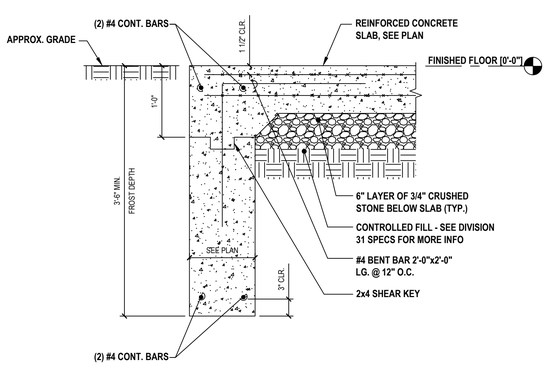

7 Typical Foundation at Exterior Doors
SCALE: N.T.S.

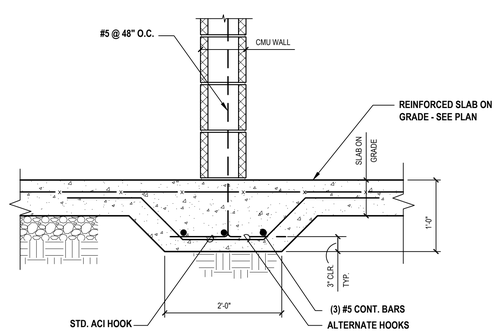

8 Typical Haunched Slab at Masonry Partitions
SCALE: NTS

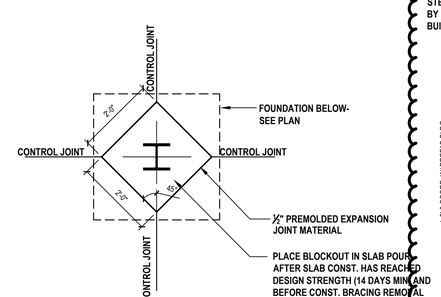

10 Column Expansion Joint Details
SCALE: NTS

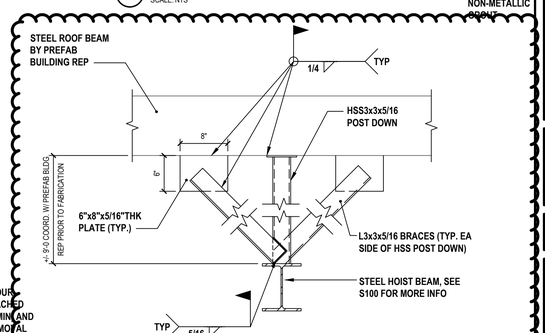

12 Hoist Beam Support Detail
SCALE: NTS

H 2 M architects + engineers

538 Broad Hollow Road, 4th Floor East
Melville, NY 11747
631.756.8000 • www.h2m.com

CONSULTANTS:

MARK	DATE	DESCRIPTION
2	12/22/2022	REVS. PER TOWN COMMENTS

STATE OF NEW YORK · KATIA DUQUE · 071496 · LICENSED PROFESSIONAL ENGINEER

"ALTERATION OF THIS DOCUMENT EXCEPT BY A LICENSED PROFESSIONAL IS ILLEGAL"

DESIGNED BY:	DRAWN BY:	CHECKED BY:	REVIEWED BY:
MDH	MDH		

PROJECT No.:	DATE:	SCALE:
VGFD2001	JULY 2022	AS SHOWN

CLIENT
VAILS GATE FIRE DISTRICT

New Storage Building (Phase I)
New Fire Station (Phase II)

872 Blooming Grove Turnpike
New Windsor, NY 12553

CONTRACT
CONTRACT G
GENERAL CONSTRUCTION

STATUS
FINAL BID DOCUMENT

SHEET TITLE
STRUCTURAL DETAILS

DRAWING No.
S1 500.02

\\h2m.com\shares\Projects\VGFD\Vails Gate Fire Dept\VGFD2001-Vails Gate FD\New Firehouse\02-BIM-CADD\Cmc-docs\structl\S500100.dwg Last Modified: Dec 27, 2022 - 4:08pm Plotted on: Feb 15, 2023 - 11:34am By jschelver

COM*check* Software Version 4.1.5.3

Envelope Compliance Certificate

Project Information

Energy Code: 2018 IECC
Project Title: Vails Gate FD Storage Building
Location: New Windsor, New York
Climate Zone: 5a
Project Type: New Construction
Vertical Glazing / Wall Area: 17%

Construction Site:
872 Blooming Grove Turnpike
New Windsor, NY 12553

Owner/Agent:
Vails Gate Fire District
872 Blooming Grove Turnpike
New Windsor, NY 12553

Designer/Contractor:
Robert Bee
H2M architects + engineers
538 Broadhollow Road
4th Floor East
Melville, NY 11747
631-756-8000

Additional Efficiency Package(s)

Credits: 1.0 Required 1.0 Proposed
Reduced Lighting Power, 1.0 credit

Building Area	Floor Area
1-Storage Building (Warehouse) : Nonresidential	3600

Envelope Assemblies

Assembly	Gross Area or Perimeter	Cavity R-Value	Cont. R-Value	Proposed U-Factor	Budget U-Factor(a)
Roof 1: Metal Building, Standing Seam, Liner System with Thermal Blocks (d), [Bldg. Use 1 - Storage Building]	3600	30.3	0.0	0.037	0.035
Floor 1: Slab-On-Grade:Unheated, Horizontal with vertical 2 ft., [Bldg. Use 1 - Storage Building] (c)	240	---	10.0	0.700	0.540
NORTH					
Exterior Wall 1: Metal Building Wall, Single Layer Mineral Fiber (compressed at girt), [Bldg. Use 1 - Storage Building]	1010	0.0	30.9	0.032	0.052
Door 1: Insulated Metal, Swinging, [Bldg. Use 1 - Storage Building]	21	---	---	0.370	0.370
Exterior Wall 2: Concrete Block:6", Partially Grouted, Cells Empty, Normal Density, Furring: None, [Bldg. Use 1 - Storage Building]	169	---	10.0	0.083	0.090
EAST					
Exterior Wall 1 copy 2: Metal Building Wall, Single Layer Mineral Fiber (compressed at girt), [Bldg. Use 1 - Storage Building]	1220	0.0	30.9	0.032	0.052
Door 3: Insulated Metal, Garage door 14% glazing, [Bldg. Use 1 - Storage Building]	140	---	---	0.040	0.310
Door 5: Insulated Metal, Swinging, [Bldg. Use 1 - Storage Building]	21	---	---	0.370	0.370
Exterior Wall 2 copy 2: Concrete Block:6", Partially Grouted, Cells Empty, Normal Density, Furring: None, [Bldg. Use 1 - Storage Building]	100	---	10.0	0.083	0.090
SOUTH					
Exterior Wall 1 copy 1: Metal Building Wall, Single Layer Mineral Fiber (compressed at girt), [Bldg. Use 1 - Storage Building]	996	0.0	30.9	0.032	0.052
Window 1: Metal Frame with Thermal Break:Operable, Perf. Specs.:	14	---	---	0.450	0.450

Assembly	Gross Area or Perimeter	Cavity R-Value	Cont. R-Value	Proposed U-Factor	Budget U-Factor(a)
Product ID 8400TL, SHGC 0.38, [Bldg. Use 1 - Storage Building] (b)					
Door 2: Insulated Metal, Swinging, [Bldg. Use 1 - Storage Building]	21	---	---	0.370	0.370
Exterior Wall 2 copy 1: Concrete Block:6", Partially Grouted, Cells Empty, Normal Density, Furring: None, [Bldg. Use 1 - Storage Building]	169	---	10.0	0.083	0.090
WEST					
Exterior Wall 1 copy 3: Metal Building Wall, Single Layer Mineral Fiber (compressed at girt), [Bldg. Use 1 - Storage Building]	884	0.0	30.9	0.032	0.052
Door 4: Insulated Metal, Garage door 14% glazing, [Bldg. Use 1 - Storage Building]	560	---	---	0.040	0.310
Exterior Wall 2 copy 3: Concrete Block:6", Partially Grouted, Cells Empty, Normal Density, Furring: None, [Bldg. Use 1 - Storage Building]	36	---	10.0	0.083	0.090

(a) Budget U-factors are used for software baseline calculations ONLY, and are not code requirements.
(b) Fenestration product performance must be certified in accordance with NFRC and requires supporting documentation.
(c) Slab-On-Grade proposed and budget U-factors shown in table are F-factors.
(d) Thermal spacer block with minimum R-3.5 must be installed above the purlin/batt, and the roof deck secured to the purlins.

Envelope PASSES: Design 30% better than code

Envelope Compliance Statement

Compliance Statement: The proposed envelope design represented in this document is consistent with the building plans, specifications, and other calculations submitted with this permit application. The proposed envelope systems have been designed to meet the 2018 IECC requirements in COM*check* Version 4.1.5.3 and to comply with any applicable mandatory requirements listed in the Inspection Checklist.

Name - Title Signature Date

COM*check* Software Version 4.1.5.3

Interior Lighting Compliance Certificate

Project Information

Energy Code: 2018 IECC
Project Title: Vails Gate FD Storage Building
Project Type: New Construction

Construction Site:
872 Blooming Grove Turnpike
New Windsor, NY 12553

Owner/Agent:
Vails Gate Fire District
872 Blooming Grove Turnpike
New Windsor, NY 12553

Designer/Contractor:
Robert Bee
H2M architects + engineers
538 Broadhollow Road
4th Floor East
Melville, NY 11747
631-756-8000

Additional Efficiency Package(s)

Credits: 1.0 Required 1.0 Proposed
Reduced Lighting Power, 1.0 credit

Allowed Interior Lighting Power

A Area Category	B Floor Area (ft2)	C Allowed Watts / ft2	D Allowed Watts (B X C)
1-Storage Building (Warehouse)	3600	0.43	1555
		Total Allowed Watts =	1555

Proposed Interior Lighting Power

A Fixture ID : Description / Lamp / Wattage Per Lamp / Ballast	B Lamps/ Fixture	C # of Fixtures	D Fixture Watt.	E (C X D)
1-Storage Building (Warehouse)				
LED 1: F1: Ceiling Mounted: Other:	1	14	47	658
LED 2: F2: Ceiling Mounted: Other:	1	17	47	799
		Total Proposed Watts =		1457

Interior Lighting PASSES: Design 6% better than code

Interior Lighting Compliance Statement

Compliance Statement: The proposed interior lighting design represented in this document is consistent with the building plans, specifications, and other calculations submitted with this permit application. The proposed interior lighting systems have been designed to meet the 2018 IECC requirements in COM*check* Version 4.1.5.3 and to comply with any applicable mandatory requirements listed in the Inspection Checklist.

Name - Title Signature Date

COM*check* Software Version 4.1.5.3

Exterior Lighting Compliance Certificate

Project Information

Energy Code: 2018 IECC
Project Title: Vails Gate FD Storage Building
Project Type: New Construction
Exterior Lighting Zone 2 (Light industrial area with limited nighttime use (LZ2))

Construction Site:
872 Blooming Grove Turnpike
New Windsor, NY 12553

Owner/Agent:
Vails Gate Fire District
872 Blooming Grove Turnpike
New Windsor, NY 12553

Designer/Contractor:
Robert Bee
H2M architects + engineers
538 Broadhollow Road
4th Floor East
Melville, NY 11747
631-756-8000

Allowed Exterior Lighting Power

A Area/Surface Category	B Quantity	C Allowed Watts / Unit	D Tradable Wattage	E Allowed Watts (B X C)
Storage Building (Walkway >= 10 feet wide)	646 ft2	0.1	Yes	65
			Total Tradable Watts (a) =	65
			Total Allowed Watts =	65
			Total Allowed Supplemental Watts (b) =	400

(a) Wattage tradeoffs are only allowed between tradable areas/surfaces.
(b) A supplemental allowance equal to 400 watts may be applied toward compliance of both non-tradable and tradable areas/surfaces.

Proposed Exterior Lighting Power

A Fixture ID : Description / Lamp / Wattage Per Lamp / Ballast	B Lamps/ Fixture	C # of Fixtures	D Fixture Watt.	E (C X D)
Storage Building (Walkway >= 10 feet wide 646 ft2): Tradable Wattage				
LED 1: EF2: Recessed mounted: Other:	1	4	43	172
LED 2: EF4: Wall Mounted: Other:	1	4	30	120
			Total Tradable Proposed Watts =	292

Exterior Lighting PASSES: Design 37% better than code

Exterior Lighting Compliance Statement

Compliance Statement: The proposed exterior lighting design represented in this document is consistent with the building plans, specifications, and other calculations submitted with this permit application. The proposed exterior lighting systems have been designed to meet the 2018 IECC requirements in COM*check* Version 4.1.5.3 and to comply with any applicable mandatory requirements listed in the Inspection Checklist.

Name - Title Signature Date

COM*check* Software Version 4.1.5.3

Mechanical Compliance Certificate

Project Information

Energy Code: 2018 IECC
Project Title: Vails Gate FD Storage Building
Location: New Windsor, New York
Climate Zone: 5a
Project Type: New Construction

Construction Site:
872 Blooming Grove Turnpike
New Windsor, NY 12553

Owner/Agent:
Vails Gate Fire District
872 Blooming Grove Turnpike
New Windsor, NY 12553

Designer/Contractor:
Robert Bee
H2M architects + engineers
538 Broadhollow Road
4th Floor East
Melville, NY 11747
631-756-8000

Additional Efficiency Package(s)

Credits: 1.0 Required 1.0 Proposed
Reduced Lighting Power, 1.0 credit

Mechanical Systems List

Quantity	System Type & Description
1	ACCU-1 (Single Zone): VRF Condensing Unit, Air Cooled Heat Pump; Heating Mode: Capacity = 10900 kBtu/h, No minimum efficiency requirement applies; Cooling Mode: Capacity = 9000 kBtu/h, No minimum efficiency requirement applies; Fan System: None
1	AC-1 (Single Zone): Cooling: 1 each - VRF Zone Fan Unit, Capacity = 9000 kBtu/h, No Economizer, Economizer exception: None; No minimum efficiency requirement applies; Fan System: None
3	GFRH-1,2,3 (Single Zone): Heating: 1 each - Radiant Heater, Gas, Capacity = 80 kBtu/h; No minimum efficiency requirement applies; Fan System: None
5	WMH-1 (Single Zone): Heating: 1 each - Unit Heater, Electric, Capacity = 5 kBtu/h; No minimum efficiency requirement applies; Fan System: None

Mechanical Compliance Statement

Compliance Statement: The proposed mechanical design represented in this document is consistent with the building plans, specifications, and other calculations submitted with this permit application. The proposed mechanical systems have been designed to meet the 2018 IECC requirements in COM*check* Version 4.1.5.3 and to comply with any applicable mandatory requirements listed in the Inspection Checklist.

Name - Title Signature Date

COM*check* Software Version 4.1.5.3

Inspection Checklist

Energy Code: 2018 IECC

Requirements: 56.0% were addressed directly in the COM*check* software

Text in the "Comments/Assumptions" column is provided by the user in the COMcheck Requirements screen. For each requirement, the user certifies that a code requirement will be met and how that is documented, or that an exception is being claimed. Where compliance is itemized in a separate table, a reference to that table is provided.

Section # & Req.ID	Plan Review	Complies?	Comments/Assumptions
C103.2 [PR1][1]	Plans and/or specifications provide all information with which compliance can be determined for the building envelope and document where exceptions to the standard are claimed.	☐Complies ☐Does Not ☐Not Observable ☐Not Applicable	
C103.2 [PR2][1]	Plans, specifications, and/or calculations provide all information with which compliance can be determined for the mechanical systems and equipment and document where exceptions to the standard are claimed. Load calculations per acceptable engineering standards and handbooks.	☐Complies ☐Does Not ☐Not Observable ☐Not Applicable	Requirement will be met.
C103.2 [PR4][1]	Plans, specifications, and/or calculations provide all information with which compliance can be determined for the interior lighting and electrical systems and equipment and document where exceptions to the standard are claimed. Information provided should include interior lighting power calculations, wattage of bulbs and ballasts, transformers and control devices.	☐Complies ☐Does Not ☐Not Observable ☐Not Applicable	
C103.2 [PR8][1]	Plans, specifications, and/or calculations provide all information with which compliance can be determined for the exterior lighting and electrical systems and equipment and document where exceptions to the standard are claimed. Information provided should include exterior lighting power calculations, wattage of bulbs and ballasts, transformers and control devices.	☐Complies ☐Does Not ☐Not Observable ☐Not Applicable	
C402.4.1 [PR10][1]	The vertical fenestration area <= 30 percent of the gross above-grade wall area.	☐Complies ☐Does Not ☐Not Observable ☐Not Applicable	
C402.4.1 [PR11][1]	The skylight area <= 3 percent of the gross roof area.	☐Complies ☐Does Not ☐Not Observable ☐Not Applicable	

1	High Impact (Tier 1)	2	Medium Impact (Tier 2)	3	Low Impact (Tier 3)

H 2 M architects + engineers

538 Broad Hollow Road, 4th Floor East
Melville, NY 11747
631.756.8000 • www.h2m.com

CONSULTANTS:

MARK	DATE	DESCRIPTION

REGISTERED ARCHITECT ROBERT BEE 032389 STATE OF NEW YORK

"ALTERATION OF THIS DOCUMENT EXCEPT BY A LICENSED PROFESSIONAL IS ILLEGAL"

DESIGNED BY:	DRAWN BY:	CHECKED BY:	REVIEWED BY:

PROJECT No.:	DATE:	SCALE:
VGFD2001	JULY 2022	AS SHOWN

CLIENT
VAILS GATE FIRE DISTRICT

New Storage Building (Phase I)
New Fire Station (Phase II)

VAILS GATE FIRE DEPT. EST. 1918 N.Y.

872 Blooming Grove Turnpike
New Windsor, NY 12553

CONTRACT
CONTRACT G
GENERAL CONSTRUCTION

STATUS
FINAL BID DOCUMENT

SHEET TITLE
ARCHITECTURE
ENERGY COMPLIANCE
NEW STORAGE BUILDING
PHASE 1

DRAWING No.
A1 010.00

X:\VGFD (Vails Gate Fire Dept)\VGFD2001-(Vails Gate FD-New Firehouse)\02-BIM-CADD\Cnc-docs\arch\A1-010.00 - A1 010.00 - ENERGY COMPLIANCE.dwg Last Modified: Jul 15, 2022 - 4:04pm Plotted on: Jul 15, 2022 - 4:07pm By: MSchwartz

Section # & Req.ID	Plan Review	Complies?	Comments/Assumptions
C402.4.2 [PR14][1]	In enclosed spaces > 2,500 ft2 directly under a roof with ceiling heights >15 ft. and used as an office, lobby, atrium, concourse, corridor, storage, gymnasium/exercise center, convention center, automotive service, manufacturing, non-refrigerated warehouse, retail store, distribution/sorting area, transportation, or workshop, the following requirements apply: (a) the daylight zone under skylights is >= half the floor area; (b) the skylight area to daylight zone is >= 3 percent with a skylight VT >= 0.40; or a minimum skylight effective aperture >= 1 percent.	☐Complies ☐Does Not ☐Not Observable ☐Not Applicable	
C406 [PR9][1]	Plans, specifications, and/or calculations provide all information with which compliance can be determined for the additional energy efficiency package options.	☐Complies ☐Does Not ☐Not Observable ☐Not Applicable	

Additional Comments/Assumptions:

1 High Impact (Tier 1) | 2 Medium Impact (Tier 2) | 3 Low Impact (Tier 3)

Section # & Req.ID	Footing / Foundation Inspection	Complies?	Comments/Assumptions
C303.2 [FO4][2]	Slab edge insulation installed per manufacturer's instructions.	☐Complies ☐Does Not ☐Not Observable ☐Not Applicable	
C303.2.1 [FO6][1]	Exterior insulation protected against damage, sunlight, moisture, wind, landscaping and equipment maintenance activities.	☐Complies ☐Does Not ☐Not Observable ☐Not Applicable	
C105 [FO3][2]	Installed slab-on-grade insulation type and R-value consistent with insulation specifications reported in plans and COMcheck reports.	☐Complies ☐Does Not ☐Not Observable ☐Not Applicable	*See the Envelope Assemblies table for values.*
C402.2.4 [FO7][2]	Slab edge insulation depth/length. Slab insulation extending away from building is covered by pavement or >= 10 inches of soil.	☐Complies ☐Does Not ☐Not Observable ☐Not Applicable	*See the Envelope Assemblies table for values.*
C402.2.6 [FO12][3]	Radiant heating systems panels insulated to >=R-3.5 on face opposite space being heated.	☐Complies ☐Does Not ☐Not Observable ☐Not Applicable	Requirement will be met. *See the Envelope Assemblies table for values.*
C403.12.2 C403.12.3 [FO9][3]	Snow/ice melting system and freeze protection systems have sensors and controls configured to limit service for pavement temperature and outdoor temperature. future connection to controls.	☐Complies ☐Does Not ☐Not Observable ☐Not Applicable	**Exception:** Requirement does not apply.

Additional Comments/Assumptions:

1 High Impact (Tier 1) | 2 Medium Impact (Tier 2) | 3 Low Impact (Tier 3)

Section # & Req.ID	Framing / Rough-In Inspection	Complies?	Comments/Assumptions
C303.1.3 [FR12][2]	Fenestration products rated in accordance with NFRC.	☐Complies ☐Does Not ☐Not Observable ☐Not Applicable	
C303.1.3 [FR13][1]	Fenestration products are certified as to performance labels or certificates provided.	☐Complies ☐Does Not ☐Not Observable ☐Not Applicable	
C402.4.3 [FR10][1]	Vertical fenestration SHGC value.	☐Complies ☐Does Not ☐Not Observable ☐Not Applicable	*See the Envelope Assemblies table for values.*
C402.4.3, C402.4.3.4 [FR8][1]	Vertical fenestration U-Factor.	☐Complies ☐Does Not ☐Not Observable ☐Not Applicable	*See the Envelope Assemblies table for values.*
C402.4.4 [FR14][2]	U-factor of opaque doors associated with the building thermal envelope meets requirements.	☐Complies ☐Does Not ☐Not Observable ☐Not Applicable	*See the Envelope Assemblies table for values.*
C402.5.1.2.1 [FR19][1]	The building envelope contains a continuous air barrier that is sealed in an approved manner and material permeability <= 0.004 dfm/ft2. Air barrier penetrations are sealed in an approved manner.	☐Complies ☐Does Not ☐Not Observable ☐Not Applicable	
C402.5.2, C402.5.4 [FR18][3]	Factory-built fenestration and doors are labeled as meeting air leakage requirements.	☐Complies ☐Does Not ☐Not Observable ☐Not Applicable	
C402.5.7 [FR17][3]	Vestibules are installed on all building entrances. Doors have self-closing devices.	☐Complies ☐Does Not ☐Not Observable ☐Not Applicable	

Additional Comments/Assumptions:

1 High Impact (Tier 1) | 2 Medium Impact (Tier 2) | 3 Low Impact (Tier 3)

Section # & Req.ID	Plumbing Rough-In Inspection	Complies?	Comments/Assumptions
C404.5, C404.5.1, C404.5.2 [PL6][3]	Heated water supply piping conforms to pipe length and volume requirements. Refer to section details.	☐Complies ☐Does Not ☐Not Observable ☐Not Applicable	**Exception:** Requirement does not apply.
C404.5, C404.5.1, C404.5.2 [PL6][3]	Heated water supply piping conforms to pipe length and volume requirements. Refer to section details.	☐Complies ☐Does Not ☐Not Observable ☐Not Applicable	**Exception:** Requirement does not apply.
C404.5, C404.5.1, C404.5.2 [PL6][3]	Heated water supply piping conforms to pipe length and volume requirements. Refer to section details.	☐Complies ☐Does Not ☐Not Observable ☐Not Applicable	**Exception:** Requirement does not apply.
C404.5, C404.5.1, C404.5.2 [PL6][3]	Heated water supply piping conforms to pipe length and volume requirements. Refer to section details.	☐Complies ☐Does Not ☐Not Observable ☐Not Applicable	**Exception:** Requirement does not apply.
C404.6.3 [PL7][3]	Pumps that circulate water between a heater and storage tank have controls that limit operation from startup to <= 5 minutes after end of heating cycle.	☐Complies ☐Does Not ☐Not Observable ☐Not Applicable	**Exception:** Requirement does not apply.
C404.6.3 [PL7][3]	Pumps that circulate water between a heater and storage tank have controls that limit operation from startup to <= 5 minutes after end of heating cycle.	☐Complies ☐Does Not ☐Not Observable ☐Not Applicable	**Exception:** Requirement does not apply.
C404.6.3 [PL7][3]	Pumps that circulate water between a heater and storage tank have controls that limit operation from startup to <= 5 minutes after end of heating cycle.	☐Complies ☐Does Not ☐Not Observable ☐Not Applicable	**Exception:** Requirement does not apply.
C404.6.3 [PL7][3]	Pumps that circulate water between a heater and storage tank have controls that limit operation from startup to <= 5 minutes after end of heating cycle.	☐Complies ☐Does Not ☐Not Observable ☐Not Applicable	**Exception:** Requirement does not apply.
C404.7 [PL8][3]	Demand recirculation water systems have controls that start the pump upon receiving a signal from the action of a user of a fixture or appliance and limits the temperature of the water entering the cold-water piping to 104°F.	☐Complies ☐Does Not ☐Not Observable ☐Not Applicable	**Exception:** Requirement does not apply.
C404.7 [PL8][3]	Demand recirculation water systems have controls that start the pump upon receiving a signal from the action of a user of a fixture or appliance and limits the temperature of the water entering the cold-water piping to 104°F.	☐Complies ☐Does Not ☐Not Observable ☐Not Applicable	**Exception:** Requirement does not apply.
C404.7 [PL8][3]	Demand recirculation water systems have controls that start the pump upon receiving a signal from the action of a user of a fixture or appliance and limits the temperature of the water entering the cold-water piping to 104°F.	☐Complies ☐Does Not ☐Not Observable ☐Not Applicable	**Exception:** Requirement does not apply.

1 High Impact (Tier 1) | 2 Medium Impact (Tier 2) | 3 Low Impact (Tier 3)

Section # & Req.ID	Plumbing Rough-In Inspection	Complies?	Comments/Assumptions
C404.7 [PL8][3]	Demand recirculation water systems have controls that start the pump upon receiving a signal from the action of a user of a fixture or appliance and limits the temperature of the water entering the cold-water piping to 104°F.	☐Complies ☐Does Not ☐Not Observable ☐Not Applicable	**Exception:** Requirement does not apply.

Additional Comments/Assumptions:

1 High Impact (Tier 1) | 2 Medium Impact (Tier 2) | 3 Low Impact (Tier 3)

Section # & Req.ID	Mechanical Rough-In Inspection	Complies?	Comments/Assumptions
C402.2.6 [ME41][3]	Thermally ineffective panel surfaces of sensible heating panels have insulation >= R-3.5.	☐Complies ☐Does Not ☐Not Observable ☐Not Applicable	**Exception:** Requirement does not apply.
C402.5.5, C403.2.4.3 [ME3][3]	Stair and elevator shaft vents have motorized dampers that automatically close. Refernece section C403.7.7 for operational details.	☐Complies ☐Does Not ☐Not Observable ☐Not Applicable	
C403.11.3 [ME61][2]	HVAC piping insulation insulated in accordance with Table C403.11.3. Insulation exposed to weather is protected from damage and is provided with shielding from solar radiation.	☐Complies ☐Does Not ☐Not Observable ☐Not Applicable	Requirement will be met.
C403.11.3 [ME61][2]	HVAC piping insulation insulated in accordance with Table C403.11.3. Insulation exposed to weather is protected from damage and is provided with shielding from solar radiation.	☐Complies ☐Does Not ☐Not Observable ☐Not Applicable	Requirement will be met.
C403.11.3 [ME61][2]	HVAC piping insulation insulated in accordance with Table C403.11.3. Insulation exposed to weather is protected from damage and is provided with shielding from solar radiation.	☐Complies ☐Does Not ☐Not Observable ☐Not Applicable	**Exception:** Requirement does not apply.
C403.11.3 [ME61][2]	HVAC piping insulation insulated in accordance with Table C403.11.3. Insulation exposed to weather is protected from damage and is provided with shielding from solar radiation.	☐Complies ☐Does Not ☐Not Observable ☐Not Applicable	**Exception:** Requirement does not apply.
C403.8.1 [ME65][1]	HVAC fan systems at design conditions do not exceed allowable fan system motor nameplate hp or fan system bhp.	☐Complies ☐Does Not ☐Not Observable ☐Not Applicable	**Exception:** Requirement does not apply. *See the Mechanical Systems list for values.*
C403.8.1 [ME65][3]	HVAC fan systems at design conditions do not exceed allowable fan system motor nameplate hp or fan system bhp.	☐Complies ☐Does Not ☐Not Observable ☐Not Applicable	Requirement will be met. *See the Mechanical Systems list for values.*
C403.8.1 [ME65][3]	HVAC fan systems at design conditions do not exceed allowable fan system motor nameplate hp or fan system bhp.	☐Complies ☐Does Not ☐Not Observable ☐Not Applicable	Requirement will be met. *See the Mechanical Systems list for values.*
C403.8.1 [ME65][3]	HVAC fan systems at design conditions do not exceed allowable fan system motor nameplate hp or fan system bhp.	☐Complies ☐Does Not ☐Not Observable ☐Not Applicable	Requirement will be met. *See the Mechanical Systems list for values.*
C403.8.3 [ME117][2]	Fans have efficiency grade (FEG) >= 67. The total efficiency of the fan at the design point of operation <= 15% of maximum total efficiency of the fan.	☐Complies ☐Does Not ☐Not Observable ☐Not Applicable	Requirement will be met.
C403.8.3 [ME117][2]	Fans have efficiency grade (FEG) >= 67. The total efficiency of the fan at the design point of operation <= 15% of maximum total efficiency of the fan.	☐Complies ☐Does Not ☐Not Observable ☐Not Applicable	Requirement will be met.

1 High Impact (Tier 1) | 2 Medium Impact (Tier 2) | 3 Low Impact (Tier 3)

H2M architects + engineers
538 Broad Hollow Road, 4th Floor East
Melville, NY 11747
631.756.8000 • www.h2m.com

CONSULTANTS:

MARK	DATE	DESCRIPTION

REGISTERED ARCHITECT ROBERT BECKER 032389 STATE OF NEW YORK

"ALTERATION OF THIS DOCUMENT EXCEPT BY A LICENSED PROFESSIONAL IS ILLEGAL"

DESIGNED BY:	DRAWN BY:	CHECKED BY:	REVIEWED BY:

PROJECT No.:	DATE:	SCALE:
VGFD2001	JULY 2022	AS SHOWN

CLIENT
VAILS GATE FIRE DISTRICT

New Storage Building (Phase I)
New Fire Station (Phase II)

872 Blooming Grove Turnpike
New Windsor, NY 12553

CONTRACT
CONTRACT G
GENERAL CONSTRUCTION

STATUS
FINAL BID DOCUMENT

SHEET TITLE
ARCHITECTURE
ENERGY COMPLIANCE
NEW STORAGE BUILDING
PHASE 1

DRAWING No.
A1 011.00

X:\VGFD (Vails Gate Fire Dept)\VGFD2001-(Vails Gate FD-New Firehouse)\02-BIM-CADD\Cnc-docs\arch\A1-011.00 - A1 013.00- ENERGY COMPLIANCE.dwg Last Modified: Jul 15, 2022 - 4:50pm Plotted on: Jul 15, 2022 - 4:07pm By: MSchwentz

Section # & Req.ID	Mechanical Rough-In Inspection	Complies?	Comments/Assumptions
C403.8.3 [ME117][2]	Fans have efficiency grade (FEG) >= 67. The total efficiency of the fan at the design point of operation <= 15% of maximum total efficiency of the fan.	☐Complies ☐Does Not ☐Not Observable ☐Not Applicable	Requirement will be met.
C403.8.3 [ME117][2]	Fans have efficiency grade (FEG) >= 67. The total efficiency of the fan at the design point of operation <= 15% of maximum total efficiency of the fan.	☐Complies ☐Does Not ☐Not Observable ☐Not Applicable	**Exception:** Single fans with motor nameplate horsepowerof = 5 hp.
C403.12.1 [ME71][2]	Systems that heat outside the building envelope are radiant heat systems controlled by an occupancy sensing device or timer switch.	☐Complies ☐Does Not ☐Not Observable ☐Not Applicable	**Exception:** Requirement does not apply.
C403.2.3 [ME55][3]	HVAC equipment efficiency verified.	☐Complies ☐Does Not ☐Not Observable ☐Not Applicable	*See the Mechanical Systems list for values.*
C403.2.2 [ME59][2]	Natural or mechanical ventilation is provided in accordance with International Mechanical Code Chapter 4. Mechanical ventilation has capability to reduce outdoor air supply to minimum per IMC Chapter 4.	☐Complies ☐Does Not ☐Not Observable ☐Not Applicable	Requirement will be met.
C403.7.1 [ME59][1]	Demand control ventilation provided for spaces >500 ft2 and >25 people/1000 ft2 occupant density and served by systems with air side economizer, auto modulating outside air damper control, or design airflow >3,000 cfm.	☐Complies ☐Does Not ☐Not Observable ☐Not Applicable	Requirement will be met.
C403.7.2 [ME115][3]	Enclosed parking garage ventilation has automatic contaminant detection and capacity to stage or modulate fans to 50% or less of design capacity.	☐Complies ☐Does Not ☐Not Observable ☐Not Applicable	Requirement will be met.
C403.7.6 [ME141][3]	HVAC systems serving guestrooms in Group R-1 buildings with > 50 guestrooms: Each guestroom is provided with controls that automatically manage temperature setpoint and ventilation (see sections C403.7.6.1 and C403.7.6.2).	☐Complies ☐Does Not ☐Not Observable ☐Not Applicable	**Exception:** Requirement does not apply.
C403.7.4 [ME57][1]	Exhaust air energy recovery on systems meeting Table C403.7.4(1) and C403.7.4(2).	☐Complies ☐Does Not ☐Not Observable ☐Not Applicable	**Exception:** Systems serving spaces that are not cooled and heated to 60°F.
C403.7.5 [ME116][1]	Kitchen exhaust systems comply with replacement air and conditioned supply air limitations, and satisfy hood rating requirements and maximum exhaust rate criteria.	☐Complies ☐Does Not ☐Not Observable ☐Not Applicable	**Exception:** Requirement does not apply.
C403.11.1 , C403.11.2 [ME60][2]	HVAC ducts and plenums insulated in accordance with C403.11.1 and constructed in accordance with C403.11.2. verification may need to occur during Foundation Inspection.	☐Complies ☐Does Not ☐Not Observable ☐Not Applicable	**Exception:** Where the design temperature difference between the inside and outside of the duct or plenum is less than 15ºF.

1 High Impact (Tier 1) | 2 Medium Impact (Tier 2) | 3 Low Impact (Tier 3)

Section # & Req.ID	Mechanical Rough-In Inspection	Complies?	Comments/Assumptions
C403.4.3. 3.2 [ME121][3]	Closed-circuit cooling tower within heat pump loop have either automatic bypass valve or lower leakage positive closure dampers. Open-circuit tower within heat pump loop have automatic valve to bypass all heat pump water flow around the tower. Open- or closed-circuit cooling towers used in conjunction with a separate heat exchanger have heat loss by shutting down the circulation pump on the cooling tower loop. Open- or closed circuit cooling towers have a separate heat exchanger to isolate the cooling tower from the heat pump loop, and heat loss is controlled by shutting down the circulation pump on the cooling tower loop.	☐Complies ☐Does Not ☐Not Observable ☐Not Applicable	**Exception:** Requirement does not apply.
C403.4.1. 4 [ME63][2]	Heating for vestibules and air curtains with integral heating include automatic controls that shut off the heating system when outdoor air temperatures > 45F. Vestibule heating and cooling systems controlled by a thermostat in the vestibule with heating setpoint <= 60F and cooling setpoint >= 80F.	☐Complies ☐Does Not ☐Not Observable ☐Not Applicable	**Exception:** Requirement does not apply.
C408.2.2. 1 [ME53][3]	Air outlets and zone terminal devices have means for air balancing.	☐Complies ☐Does Not ☐Not Observable ☐Not Applicable	Requirement will be met.
C403.5, C403.5.1, C403.5.2 [ME123][3]	Refrigerated display cases, walk-in coolers or walk-in freezers served by remote compressors and remote condensers not located in a condensing unit, have fan-powered condensers that comply with Sections C403.5.1 and refrigeration compressor systems that comply with C403.5.2..	☐Complies ☐Does Not ☐Not Observable ☐Not Applicable	**Exception:** Requirement does not apply.

Additional Comments/Assumptions:

1 High Impact (Tier 1) | 2 Medium Impact (Tier 2) | 3 Low Impact (Tier 3)

Section # & Req.ID	Rough-In Electrical Inspection	Complies?	Comments/Assumptions
C405.2.2. 2 [EL22][1]	Spaces required to have light-reduction controls have a manual control that allows the occupant to reduce the connected lighting load in a reasonably uniform illumination pattern >= 50 percent.	☐Complies ☐Does Not ☐Not Observable ☐Not Applicable	
C405.2.1, C405.2.1. 1 [EL18][1]	Occupancy sensors installed in classrooms/lecture/training rooms, conference/meeting/multipurpose rooms, copy/print rooms, lounges/breakrooms, enclosed offices, open plan office areas, restrooms, storage rooms, locker rooms, warehouse storage areas, and other spaces <= 300 sqft that are enclosed by floor-to-ceiling height partitions. Reference section language C405.2.1.2 for control function in warehouses and section C405.2.1.3 for open plan office spaces.	☐Complies ☐Does Not ☐Not Observable ☐Not Applicable	
C405.2.1. 2 [EL19][1]	Occupancy sensors control function in warehouses: In warehouses, the lighting in aisleways and open areas is controlled with occupant sensors that automatically reduce lighting power by 50% or more when the areas are unoccupied. The occupant sensors control lighting in each aisleway independently and do not control lighting beyond the aisleway being controlled by the sensor.	☐Complies ☐Does Not ☐Not Observable ☐Not Applicable	
C405.2.1. 3 [EL20][1]	Occupant sensor control function in open plan office areas: Occupant sensor controls in open office spaces >= 300 sq.ft. have controls 1) configured so that general lighting can be controlled separately in control zones with floor areas <= 600 sq.ft. within the space, 2) automatically turn off general lighting in all control zones within 20 minutes after all occupants have left the space, 3) are configured so that general lighting power in each control zone is reduced by >= 80% of the full zone general lighting power within 20 minutes of all occupants leaving that control zone, and 4) are configured such that any daylight responsive control will activate space general lighting or control zone general lighting only when occupancy for the same area is detected.	☐Complies ☐Does Not ☐Not Observable ☐Not Applicable	
C405.2.2, C405.2.2. 1, C405.2.2. 2 [EL21][2]	Each area not served by occupancy sensors (per C405.2.1) have time-switch controls and functions detailed in sections C405.2.2.1 and C405.2.2.2.	☐Complies ☐Does Not ☐Not Observable ☐Not Applicable	

1 High Impact (Tier 1) | 2 Medium Impact (Tier 2) | 3 Low Impact (Tier 3)

Section # & Req.ID	Rough-In Electrical Inspection	Complies?	Comments/Assumptions
C405.2.3, C405.2.3. 1, C405.2.3. 2 [EL23][2]	Daylight zones provided with individual controls that control the lights independent of general area lighting. See code section C405.2.3 Daylight-responsive controls for applicable spaces, C405.2.3.1 Daylight responsive control function and section C405.2.3.2 Sidelit zone.	☐Complies ☐Does Not ☐Not Observable ☐Not Applicable	
C405.2.4 [EL26][1]	Separate lighting control devices for specific uses installed per approved lighting plans.	☐Complies ☐Does Not ☐Not Observable ☐Not Applicable	
C405.2.4 [EL27][1]	Additional interior lighting power allowed for special functions per the approved lighting plans and is automatically controlled and separated from general lighting.	☐Complies ☐Does Not ☐Not Observable ☐Not Applicable	
C405.2.5 [EL28][hall]	Automatic lighting controls for exterior lighting installed. Controls will be daylight controlled, set based on business operation time-of-day, or reduce connected lighting > 30%.	☐Complies ☐Does Not ☐Not Observable ☐Not Applicable	
C405.3 [EL6][1]	Exit signs do not exceed 5 watts per face.	☐Complies ☐Does Not ☐Not Observable ☐Not Applicable	
C405.6 [EL26][2]	Low-voltage dry-type distribution electric transformers meet the minimum efficiency requirements of Table C405.6.	☐Complies ☐Does Not ☐Not Observable ☐Not Applicable	
C405.7 [EL27][2]	Electric motors meet the minimum efficiency requirements of Tables C405.7(1) through C405.7(4). Efficiency verified through certification under an approved certification program or the equipment efficiency ratings shall be provided by motor manufacturer (where certification programs do not exist).	☐Complies ☐Does Not ☐Not Observable ☐Not Applicable	
C405.8.2, C405.8.2. 1 [EL28][2]	Escalators and moving walks comply with ASME A17.1/CSA B44 and have automatic controls configured to reduce speed to the minimum permitted speed in accordance with ASME A17.1/CSA B44 or applicable local code when not conveying passengers.	☐Complies ☐Does Not ☐Not Observable ☐Not Applicable	
C405.9 [EL29][2]	Total voltage drop across the combination of feeders and branch circuits <= 5%.	☐Complies ☐Does Not ☐Not Observable ☐Not Applicable	

Additional Comments/Assumptions:

1 High Impact (Tier 1) | 2 Medium Impact (Tier 2) | 3 Low Impact (Tier 3)

Section # & Req.ID	Insulation Inspection	Complies?	Comments/Assumptions
C303.1 [IN3][1]	Roof insulation installed per manufacturer's instructions. Blown or poured loose-fill insulation is installed only where the roof slope is <=3 in 12.	☐Complies ☐Does Not ☐Not Observable ☐Not Applicable	
C402.2.1 [IN20][1]	Insulation installed on a suspended ceiling having ceiling tiles is not being specified for roof/ceiling assemblies. Continuous insulation board installed in 2 or more layers with edge joints offset between layers.	☐Complies ☐Does Not ☐Not Observable ☐Not Applicable	
C303.1 [IN10][2]	Building envelope insulation is labeled with R-value or insulation certificate providing R-value and other relevant data.	☐Complies ☐Does Not ☐Not Observable ☐Not Applicable	
C303.2 [IN7][1]	Above-grade wall insulation installed per manufacturer's instructions.	☐Complies ☐Does Not ☐Not Observable ☐Not Applicable	
C303.2.1 [IN14][2]	Exterior insulation is protected from damage with a protective material. Verification for exposed foundation insulation may need to occur during Foundation Inspection.	☐Complies ☐Does Not ☐Not Observable ☐Not Applicable	
C105 [IN6][1]	Installed above-grade wall insulation type and R-value consistent with insulation specifications reported in plans and COMcheck reports.	☐Complies ☐Does Not ☐Not Observable ☐Not Applicable	*See the Envelope Assemblies table for values.*
C402.2.3 [IN8][2]	Installed floor insulation type and R-value consistent with insulation specifications reported in plans and COMcheck reports.	☐Complies ☐Does Not ☐Not Observable ☐Not Applicable	*See the Envelope Assemblies table for values.*
C402.2.6 [IN18][3]	Radiant panels and associated components, designed for heat transfer from the panel surfaces to the occupants or indoor space are insulated with a minimum of R-3.5.	☐Complies ☐Does Not ☐Not Observable ☐Not Applicable	
C105 [IN2][1]	Installed roof insulation type and R-value consistent with insulation specifications reported in plans and COMcheck reports. For some ceiling systems, verification may need to occur during Framing Inspection.	☐Complies ☐Does Not ☐Not Observable ☐Not Applicable	*See the Envelope Assemblies table for values.*
C402.5.1. 1 [IN1][1]	All sources of air leakage in the building thermal envelope are sealed, caulked, gasketed, weather stripped or wrapped with moisture vapor-permeable wrapping material to minimize air leakage.	☐Complies ☐Does Not ☐Not Observable ☐Not Applicable	

Additional Comments/Assumptions:

1 High Impact (Tier 1) | 2 Medium Impact (Tier 2) | 3 Low Impact (Tier 3)

Section # & Req.ID	Final Inspection	Complies?	Comments/Assumptions
C303.3, C408.2.5. 2 [FI17][3]	Furnished O&M instructions for systems and equipment to the building owner or designated representative.	☐Complies ☐Does Not ☐Not Observable ☐Not Applicable	
C303.3, C408.2.5. 3 [FI8][3]	Furnished O&M manuals for HVAC systems within 90 days of system acceptance.	☐Complies ☐Does Not ☐Not Observable ☐Not Applicable	Requirement will be met.
C402.5.6 [FI37][1]	Weatherseals installed on all loading dock cargo door openings and provide direct contact along the top and sides of vehicles parked in the doorway.	☐Complies ☐Does Not ☐Not Observable ☐Not Applicable	
C402.5.6 [FI37][1]	Weatherseals installed on all loading dock cargo door openings and provide direct contact along the top and sides of vehicles parked in the doorway.	☐Complies ☐Does Not ☐Not Observable ☐Not Applicable	
C402.5.6 [FI37][1]	Weatherseals installed on all loading dock cargo door openings and provide direct contact along the top and sides of vehicles parked in the doorway.	☐Complies ☐Does Not ☐Not Observable ☐Not Applicable	
C402.5.6 [FI37][1]	Weatherseals installed on all loading dock cargo door openings and provide direct contact along the top and sides of vehicles parked in the doorway.	☐Complies ☐Does Not ☐Not Observable ☐Not Applicable	
C402.5.8 [FI26][3]	Recessed luminaires in thermal envelope to limit infiltration and be IC rated and labeled. Seal between interior finish and luminaire housing.	☐Complies ☐Does Not ☐Not Observable ☐Not Applicable	
C403.2.2 [FI27][3]	HVAC systems and equipment capacity does not exceed calculated loads.	☐Complies ☐Does Not ☐Not Observable ☐Not Applicable	Requirement will be met.
C403.2.4. 1 [FI47][3]	Heating and cooling to each zone is controlled by a thermostat control. Minimum one humidity control device per installed humidification/dehumidification system.	☐Complies ☐Does Not ☐Not Observable ☐Not Applicable	Requirement will be met.
C403.2.4. 1 [FI47][3]	Heating and cooling to each zone is controlled by a thermostat control. Minimum one humidity control device per installed humidification/dehumidification system.	☐Complies ☐Does Not ☐Not Observable ☐Not Applicable	Requirement will be met.
C403.2.4. 1 [FI47][3]	Heating and cooling to each zone is controlled by a thermostat control. Minimum one humidity control device per installed humidification/dehumidification system.	☐Complies ☐Does Not ☐Not Observable ☐Not Applicable	Requirement will be met.

1 High Impact (Tier 1) | 2 Medium Impact (Tier 2) | 3 Low Impact (Tier 3)

H 2 M architects + engineers
538 Broad Hollow Road, 4th Floor East
Melville, NY 11747
631.756.8000 • www.h2m.com

CONSULTANTS:

MARK	DATE	DESCRIPTION

REGISTERED ARCHITECT ROBERT BEE 032389 STATE OF NEW YORK

"ALTERATION OF THIS DOCUMENT EXCEPT BY A LICENSED PROFESSIONAL IS ILLEGAL"

DESIGNED BY:	DRAWN BY:	CHECKED BY:	REVIEWED BY:

PROJECT No.:	DATE:	SCALE:
VGFD2001	JULY 2022	AS SHOWN

CLIENT
VAILS GATE FIRE DISTRICT

New Storage Building (Phase I)
New Fire Station (Phase II)

VAILS GATE FIRE DEPT. EST. 1910 N.Y.

872 Blooming Grove Turnpike
New Windsor, NY 12553

CONTRACT
CONTRACT G
GENERAL CONSTRUCTION

STATUS
FINAL BID DOCUMENT

SHEET TITLE
ARCHITECTURE
ENERGY COMPLIANCE
NEW STORAGE BUILDING
PHASE 1

DRAWING No.
A1 012.00

X:\VGFD (Vails Gate Fire Dept)\VGFD2001-(Vails Gate FD-New Firehouse)\02-BIM-CADD\Cnc-docs\arch\A1-010.00 - A1-013.00-ENERGY COMPLIANCE.dwg Last Modified: Jul 15, 2022 - 4:07pm By MSchwentz Plotted on: Jul 15, 2022 - 4:07pm By MSchwentz

Section # & Req.ID	Final Inspection	Complies?	Comments/Assumptions
C403.2.4.1 [FI47][1]	Heating and cooling to each zone is controlled by a thermostat control. Minimum one humidity control device per installed humidification/dehumidification system.	☐Complies ☐Does Not ☐Not Observable ☐Not Applicable	Requirement will be met.
C403.2.4.1.1 [FI42][1]	Heat pump controls prevent supplemental electric resistance heat from coming on when not needed.	☐Complies ☐Does Not ☐Not Observable ☐Not Applicable	Requirement will be met.
C403.4.1.2 [FI38][1]	Thermostatic controls have a 5 °F deadband.	☐Complies ☐Does Not ☐Not Observable ☐Not Applicable	Requirement will be met.
C403.2.4.1.3 [FI20][1]	Temperature controls have setpoint overlap restrictions.	☐Complies ☐Does Not ☐Not Observable ☐Not Applicable	Requirement will be met.
C403.2.4.2 [FI39][1]	Each zone equipped with setback controls using automatic time clock or programmable control system.	☐Complies ☐Does Not ☐Not Observable ☐Not Applicable	Requirement will be met.
C403.2.4.2.1, C403.2.4.2.2 [FI40][1]	Automatic Controls: Setback to 55°F (heat) and 85°F (cool); 7-day clock, 2-hour occupant override, 10-hour backup	☐Complies ☐Does Not ☐Not Observable ☐Not Applicable	Requirement will be met.
C405.4.1 [FI18][1]	Interior installed lamp and fixture lighting power is consistent with what is shown on the approved lighting plans, demonstrating proposed watts are less than or equal to allowed watts.	☐Complies ☐Does Not ☐Not Observable ☐Not Applicable	*See the Interior Lighting fixture schedule for values.*
C405.5.1 [FI19][1]	Exterior lighting power is consistent with what is shown on the approved lighting plans, demonstrating proposed watts are less than or equal to allowed watts.	☐Complies ☐Does Not ☐Not Observable ☐Not Applicable	*See the Exterior Lighting fixture schedule for values.*
C408.1.1 [FI57][1]	Building operations and maintenance documents will be provided to the owner. Documents will cover manufacturers' information, specifications, programming procedures and means of illustrating to owner how building, equipment and systems are intended to be installed, maintained, and operated.	☐Complies ☐Does Not ☐Not Observable ☐Not Applicable	
C408.2.1 [FI28][1]	Commissioning plan developed by registered design professional or approved agency.	☐Complies ☐Does Not ☐Not Observable ☐Not Applicable	Requirement will be met.
C408.2.3.1 [FI31][1]	HVAC equipment has been tested to ensure proper operation.	☐Complies ☐Does Not ☐Not Observable ☐Not Applicable	Requirement will be met.

1	High Impact (Tier 1)	2	Medium Impact (Tier 2)	3	Low Impact (Tier 3)

Section # & Req.ID	Final Inspection	Complies?	Comments/Assumptions
C408.2.3.2 [FI10][1]	HVAC control systems have been tested to ensure proper operation, calibration and adjustment of controls.	☐Complies ☐Does Not ☐Not Observable ☐Not Applicable	Requirement will be met.
C408.2.4 [FI29][1]	Preliminary commissioning report completed and certified by registered design professional or approved agency.	☐Complies ☐Does Not ☐Not Observable ☐Not Applicable	Requirement will be met.
C408.2.5.1 [FI7][1]	Furnished HVAC as-built drawings submitted within 90 days of system acceptance.	☐Complies ☐Does Not ☐Not Observable ☐Not Applicable	Requirement will be met.
C408.2.5.1 [FI16][1]	Furnished as-built drawings for electric power systems within 90 days of system acceptance.	☐Complies ☐Does Not ☐Not Observable ☐Not Applicable	
C408.2.5.3 [FI43][1]	An air and/or hydronic system balancing report is provided for HVAC systems.	☐Complies ☐Does Not ☐Not Observable ☐Not Applicable	Requirement will be met.
C408.2.5.4 [FI30][1]	Final commissioning report due to building owner within 90 days of receipt of certificate of occupancy.	☐Complies ☐Does Not ☐Not Observable ☐Not Applicable	Requirement will be met.
C408.3 [FI33][1]	Lighting systems have been tested to ensure proper calibration, adjustment, programming, and operation.	☐Complies ☐Does Not ☐Not Observable ☐Not Applicable	

Additional Comments/Assumptions:

1	High Impact (Tier 1)	2	Medium Impact (Tier 2)	3	Low Impact (Tier 3)

H2M architects + engineers

538 Broad Hollow Road, 4th Floor East
Melville, NY 11747
631.756.8000 • www.h2m.com

CONSULTANTS:

MARK	DATE	DESCRIPTION

REGISTERED ARCHITECT ROBERT BEE 032389 STATE OF NEW YORK

"ALTERATION OF THIS DOCUMENT EXCEPT BY A LICENSED PROFESSIONAL IS ILLEGAL"

DESIGNED BY:	DRAWN BY:	CHECKED BY:	REVIEWED BY:

PROJECT No.:	DATE:	SCALE:
VGFD2001	JULY 2022	AS SHOWN

CLIENT

VAILS GATE FIRE DISTRICT

New Storage Building (Phase I)
New Fire Station (Phase II)

872 Blooming Grove Turnpike
New Windsor, NY 12553

CONTRACT

CONTRACT G
GENERAL CONSTRUCTION

STATUS

FINAL BID DOCUMENT

SHEET TITLE

ARCHITECTURE
ENERGY COMPLIANCE
NEW STORAGE BUILDING
PHASE 1

DRAWING No.

A1 013.00

X:\VGFD (Vails Gate Fire Dept)\VGFD2001-(Vails Gate FD-New Firehouse)\02-BIM-CADD\Cnx-docs\arch\A1-010.00 - A1013.00_ENERGY COMPLIANCE.dwg Last Modified: Jul 15, 2022 - 4:04pm Plotted on: Jul 15, 2022 - 4:09pm By: MSchwartz

NYS BUILDING CODE ANALYSIS

2020 BUILDING CODE OF THE STATE OF NEW YORK
AND APPLICABLE REFERENCE STANDARDS.

2020 FIRE CODE OF NEW YORK STATE.
2020 ECC CODE OF NEW YORK STATE.
2020 MECHANICAL CODE OF NEW YORK STATE.
2020 PLUMBING CODE OF NEW YORK STATE.
2020 PROPERTY MAINTENANCE CODE OF NEW YORK STATE.

INTRODUCTION

THIS PROJECT IS FOR THE CONSTRUCTION OF A ONE STORY HIGH STORAGE BUILDING WITH A MEZZANINE.

1. USE AND OCCUPANCY CLASSIFICATION (SECTION 311.3)

PRIMARY OCCUPANCY - S-2 (LOW -HAZARD STORAGE)

2. GENERAL HEIGHTS & BUILDING AREA

BUILDING HEIGHT (504.3 /504.4)

OCC.	CONS. TYPE	SPRINKLER	HEIGHT (PERMITTED)	HEIGHT (PROPOSED)
S-2	IIB	NO	55FT / 3 STORIES	31'-6" / 1 STORY

MEZZANINE - (505.2.1)	AREA (PERMITTED)	AREA(PROPOSED)
	.33x3,600 = 1,200 SF	627 SF

BUILDING AREA (506.2)

OCC.	CONS. TYPE	SPRINKLER	AREA (PERMITTED)	AREA (PROPOSED)
S-2	IIB	NO	26,000 FT	3,600 SF

3. FIRE RESISTANCE RATINGS REQUIREMENTS

BUILDING ELEMENTS

TABLE 601.

BUILDING ELEMENT	TYPE IIB REQUIRED	PROPOSED
- PRIMARY STRUCTURAL FRAME	0	0
BEARING WALLS		
- EXTERIOR	0	0
- INTERIOR	0	0
NONBEARING WALLS AND PARTITIONS		
- INTERIOR	0	0
- FLOOR CONSTRUCTION AND ASSOCIATED SECONDARY MEMBERS	0	0
- ROOF CONSTRUCTION AND ASSOCIATED SECONDARY MEMBER	0	0

4. INTERIOR WALL & CEILING FINISHES

TABLE 803.13

GROUP	INTERIOR EXIT STAIRWAYS AND RAMPS AND EXIT PASSAGEWAY	CORRIDOR AND ENCLOSURE FOR EXIT ACCESS STAIRWAYS AND RAMPS	ROOMS AND ENCLOSURE SPACES
S	B	B	C

5. AUTOMATIC SPRINKLER SYSTEMS (903.2.10)

USE S-2 SPRINKLER SYSTEMS REQUIRED IF EITHER CONDITIONS EXISTS:

1. FIRE AREA EXCEEDS 12,000 SF - NO
2. GARAGE IS LOCATED BENEATH OTHER USES - NO

*AN AUTOMATIC SYSTEM IS NOT REQUIRED

6. PORTABLE FIRE EXTINGUISHERS (SECTION 906)

WHERE REQUIRED:
1. IN GROUP 'S' OCCUPANCIES
TABLE 906.3(1) FIRE EXTINGUISHERS FOR CLASS-A FIRE HAZARDS:

MINIMUM RATED SINGLE EXTINGUISHER:	2-A
MAX. FLOOR AREA PER UNIT:	1,500 SqFt.
MAX. DISTANCE OF TRAVEL:	75 FEET

7. FIRE ALARM AND DETECTION SYSTEMS (907)

907.2: WHERE REQUIRED - NEW BUILDINGS AND STRUCTURES: AN APPROVED FIRE ALARM SYSTEM INSTALLED IN ACCORDANCE WITH THE PROVISIONS OF THE IBC AND NFPA 72 SHALL BE PROVIDED IN NEW BUILDINGS & STRUCTURES
-A FIRE ALARM SYSTEM IS REQUIRED.

8. MEANS OF EGRESS

OCCUPANCY LOAD (1004.5)

USE	SF/OCC	TOTAL SF	TOTAL OCC.
S-2	300	3,600	12

-NUMBER OF EXITS - SEE EGRESS PLAN (1006)
-SIZE OF EXITS - SEE EGRESS PLAN (1010)
-TRAVEL DISTANCE - SEE EGRESS PLAN (1017.2)

9. PLUMBING SYSTEMS

USE	WATER CLOSET		LAVORATORIES	DRINKING FOUNTAIN	SERVICE SINK
S-2	MALE	FEMALE			
REQ'D	1 PER 100 (COMBINED)		1 PER 100 (COMBINED)	1 PER 100	1
PROVIDED	1		1	0	1
				NONE PER 2902.6	

EXITS

1. ALL BUILDING EXITS SHALL CONFORM TO ALL OF THE REQUIREMENTS OF THE 2020 BUILDING CODE OF THE STATE OF NEW YORK.
2. ALL DOORS AND DOORWAYS SHALL CONFORM TO ALL OF THE LATEST REQUIREMENTS AS SET FORTH IN THE IBC. EXIT DOORS FROM ANY FLOOR AREA OR OCCUPIED SPACE SHALL BE READILY OPENABLE, SHALL BE ARRANGED SO THAT THEY CANNOT BE LOCKED AGAINST EXIT FROM SUCH AREA OR SPACE AND SHALL BE EQUIPPED WITH SELF-CLOSING AND OTHER NECESSARY DEVICES WHICH WILL MAINTAIN THEM IN NORMALLY CLOSED POSITIONS.
3. HANGINGS OR DRAPERIES SHALL NOT BE PLACED OVER EXIT DOORS OR OTHERWISE LOCATED SO AS TO CONCEAL OR OBSCURE ANY EXIT. MIRRORS SHALL NOT BE PLACED IN OR ADJACENT TO ANY EXIT OR ON EXIT DOORS.
4. THE PATH OF EGRESS TRAVEL ALONG A MEANS OF EGRESS SHALL NOT BE INTERRUPTED BY ANY BUILDING ELEMENT. OBSTRUCTIONS SHALL NOT BE PLACED IN THE REQUIRED WIDTH OF A MEANS OF EGRESS EXCEPT PROJECTIONS PERMITTED BY CHAPTER 10. THE REQUIRED CAPACITY OF A MEANS OF EGRESS SYSTEM SHALL NOT BE DIMINISHED ALONG THE PATH OF EGRESS TRAVEL.

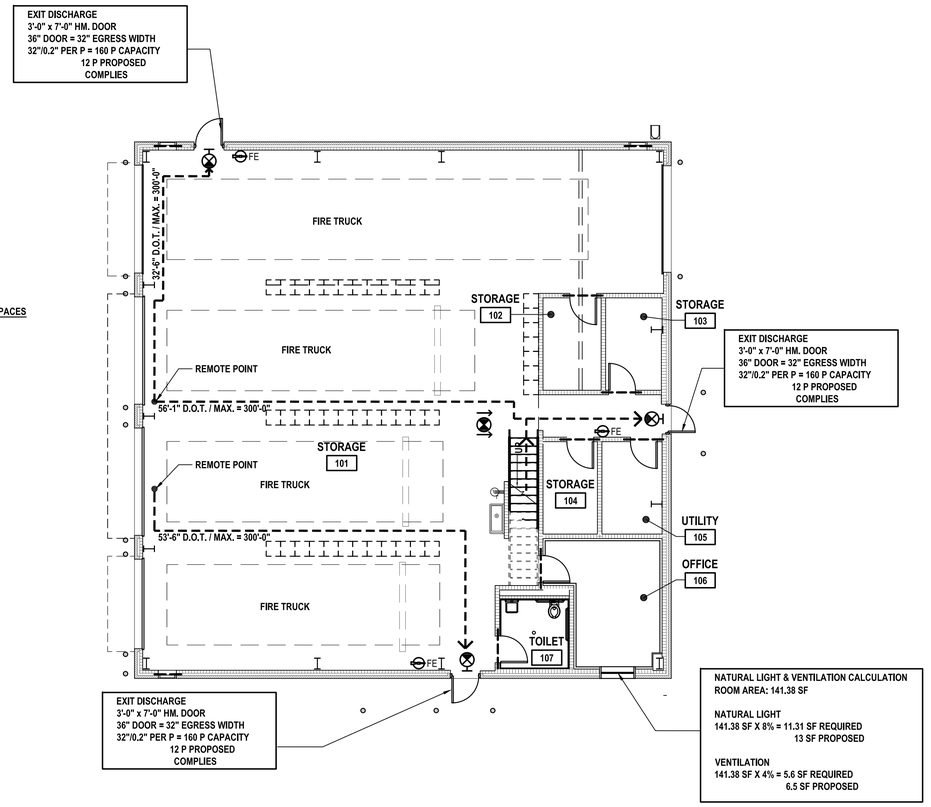

1 First Floor - Life Safety Plan
SCALE: 1/8" = 1'-0"

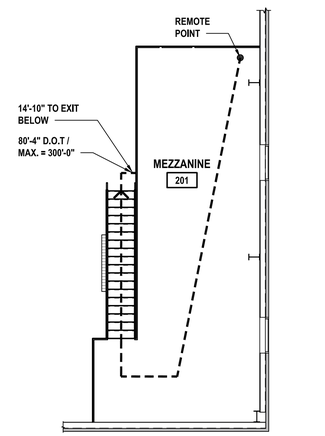

2 Mezzanine - Life Safety Plan
SCALE: 1/8" = 1'-0"

LIFE SAFETY LEGEND

	EGRESS PATH
D.O.T.	INDICATES DISTANCE OF TRAVEL
FE	INDICATES NEW FIRE EXTINGUISHER
	INDICATES NEW EXIT SIGN. ALL EXIT AND EMERGENCY BATTERY LIGHTING (BUILDING STANDARD)
	INDICATES NEW DIRECTIONAL EXIT SIGN.

NOTE:
ALL FIRE WALLS OR ANY OTHER WALLS, FLOOR AND CEILINGS REQUIRED TO HAVE PROTECTED OPENINGS OR PENETRATIONS SHALL EFFECTIVELY AND PERMANENTLY BE IDENTIFIED WITH SIGNS OR STENCILING IN CONCEALED SPACES AS INDICATED IN SECTION 703.7 OF THE 2020 BUILDING CODE OF NEW YORK STATE.

H2M architects + engineers
538 Broad Hollow Road, 4th Floor East
Melville, NY 11747
631.756.8000 • www.h2m.com

CONSULTANTS:

MARK	DATE	DESCRIPTION
2	12/22/2022	REVS. PER TOWN COMMENTS

REGISTERED ARCHITECT ROBERT BEE 032389 STATE OF NEW YORK

"ALTERATION OF THIS DOCUMENT EXCEPT BY A LICENSED PROFESSIONAL IS ILLEGAL"

DESIGNED BY:	DRAWN BY:	CHECKED BY:	REVIEWED BY:
FRM	FRM		
PROJECT No.: VGFD2001	DATE: JULY 2022		SCALE: AS SHOWN

CLIENT
VAILS GATE FIRE DISTRICT

New Storage Building (Phase I)
New Fire Station (Phase II)

872 Blooming Grove Turnpike
New Windsor, NY 12553

CONTRACT
CONTRACT G
GENERAL CONSTRUCTION

STATUS
FINAL BID DOCUMENT

SHEET TITLE
ARCHITECTURE
BUILDING CODE ANALYSIS & EGRESS PLAN
NEW STORAGE BUILDING
PHASE 1

DRAWING No.
A1 014.02

X:\VGFD\Vails Gate Fire Dept\VGFD2001-Vails Gate FD-New Firehouse\02-BIM-CADD\Cnc-docs\arch\A1-014.00- Egress Plan.dwg Last Modified: Jan 12, 2023 - 2:42pm Plotted on: Jan 13, 2023 - 9:28am By:jgusman

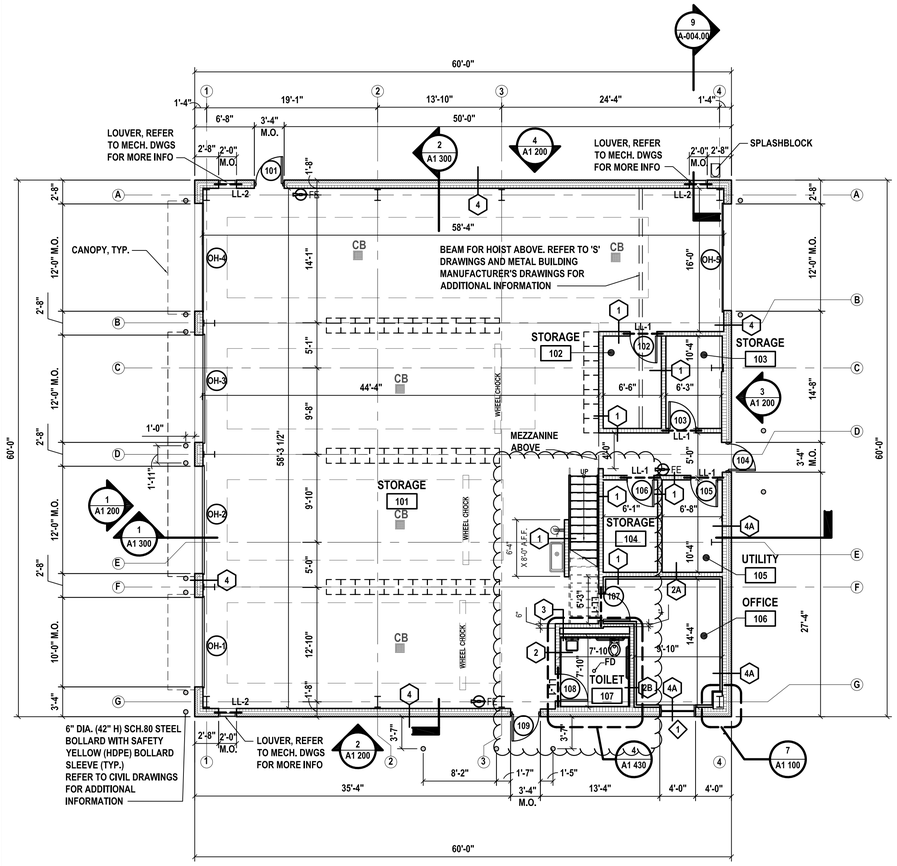

1 Proposed First Floor Plan
SCALE: 1/8" = 1'-0"

R-Values removed from plans- only shown on Comcheck and specifications

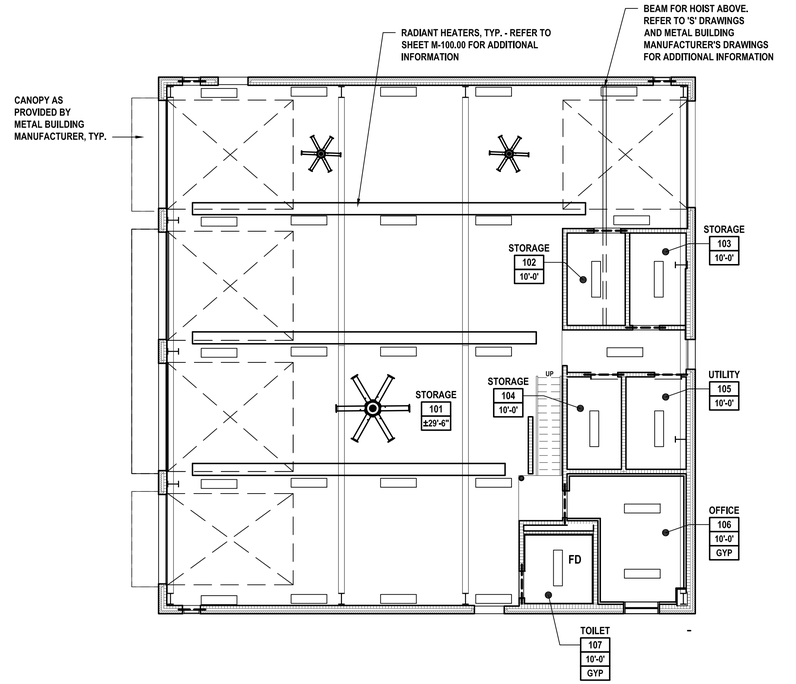

2 Proposed RCP
SCALE: 1/8" = 1'-0"

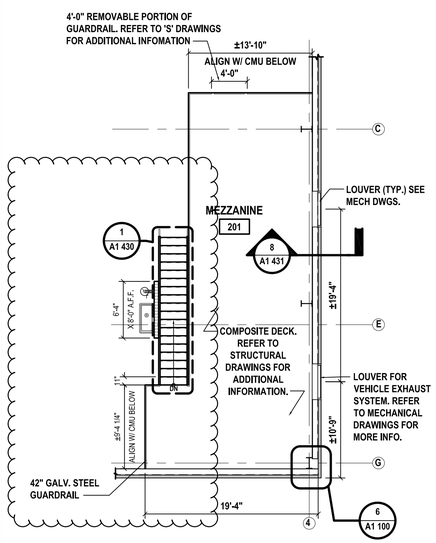

3 Proposed Mezzanine Plan
SCALE: 1/8" = 1'-0"

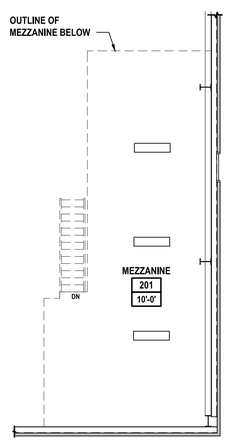

4 Proposed Mezzanine RCP
SCALE: 1/8" = 1'-0"

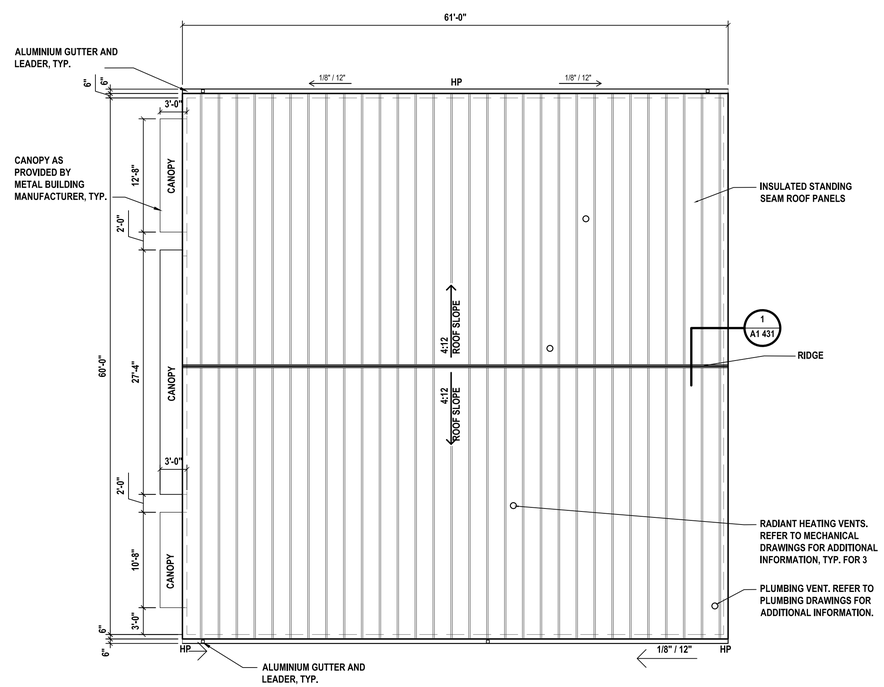

5 Proposed Roof Plan
SCALE: 1/8" = 1'-0"

GENERAL NOTES:

1. ACCOMMODATE THE CONSTRUCTION TO ACCEPT ALL PIPING, CONDUITS, EQUIPMENT, ETC., EITHER SPECIFIED OR DETAILED AS REQUIRED. COORDINATE THE LOCATION OF ANY RECESSED OR CONCEALED ITEMS WITH ALL TRADES.
2. COORDINATE THE WORK REQUIRED ON THIS DRAWING WITH ALL CIVIL, STRUCTURAL, MECHANICAL, PLUMBING AND ELECTRICAL DRAWINGS AND SPECIFICATIONS.
3. SEE 'S' DRAWINGS FOR CONTROL AND EXPANSION JOINT LOCATIONS.
4. ALL MASONRY WALLS ARE NOTED AS NOMINAL DIMENSIONS.
5. ALL DIMENSIONS ARE FROM MASONRY TO MASONRY AND DO NOT INCLUDE FINISHES, TYP.
6. FINISHED FLOOR ELEVATION IS 0'-2" UNLESS NOTED OTHERWISE.
7. STRUCTURAL STEEL MEMBERS SHOWN ARE DIAGRAMMATIC. ALL STRUCTURAL STEEL TO BE INCLUDED AS PART OF THE PREFABRICATED METAL BUILDING U.N.O.

LEGEND

ROOM NAME #	ROOM NAME DESIGNATION TAG ROOM NUMBER DESIGNATION TAG
	NEW EXTERIOR WALL
	NEW INTERIOR CMU WALL
	NEW INTERIOR CMU WALL WITH FURRING
#	WALL TAG - REFER TO WALL TYPES ON DWG. A1 600.00 FOR ADDITIONAL INFORMATION
#	NEW DOORS, FRAMES AND HARDWARE - REFER TO SCHEDULE ON DWG A1 600.00 FOR ADDITIONAL INFORMATION
1	NEW WINDOW AND ASSOCIATED HARDWARE - REFER TO SCHEDULE ON DWG A1 600.00 FOR ADDITIONAL INFORMATION
	6" DIA. (42" H) SCH.80 STEEL BOLLARD WITH SAFETY YELLOW (HDPE) BOLLARD SLEEVE (TYP.) SEE CIVIL DWGS FOR FURTHER INFO.
	TEMPORARY FURNITURE PROVIDED BY OTHERS
	NEW 12"x48" LED LIGHT FIXTURE. SEE ELECTRICAL DRAWINGS
	NEW PADDLE FAN, SEE MECHANICAL AND ELECTRICAL DRAWINGS
CB	NEW CATCH BASIN, SEE PLUMBING DRAWINGS

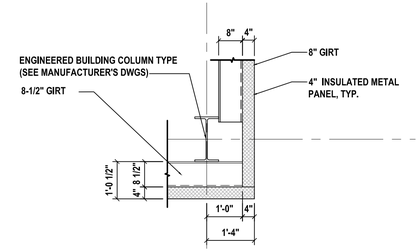

6 Corner Detail at Insulated Metal Panel
SCALE: 1/2" = 1'-0"

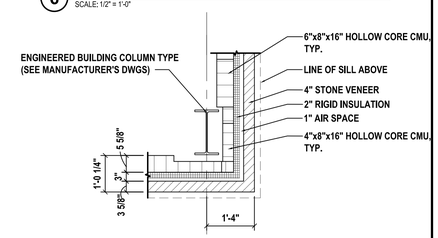

7 Corner Detail at Masonry
SCALE: 1/2" = 1'-0"

LOOSE LINTEL SCHEDULE

MARK	NO. AND SIZE	COMMENTS	DETAIL
LL-1	(2) L3 1/2x3 1/2x1/4 PL 1/4" x 10" x M.O.	1,2, & 5	
LL-2	(2) L3x2 1/2x5/16 (LLV)	1,3-5	

LOOSE LINTEL NOTES:

1. LINTEL LENGTHS SHALL BE THE MASONRY OPENING PLUS 1'-4" TO ALLOW FOR 8" BEARING ON SOLID GROUTED MASONRY AT EACH END.
2. ALL EXTERIOR LINTELS SHALL HAVE SHOP APPLIED HOT DIPPED GALVANIZED COATING (U.O.N.).
3. ALL INTERIOR LINTELS TO BE SHOP PRIMED AND FIELD PAINTED AS PER SPECIFICATION.
4. VERTICAL LEGS OF DOUBLE ANGLES SHALL BE WELDED TOGETHER
5. WELD VERTICAL REINFORCEMENT INTERRUPTED BY MASONRY OPENINGS TO TOP OF THE STEEL LINTELS, TYPICAL.

H2M architects + engineers
538 Broad Hollow Road, 4th Floor East
Melville, NY 11747
631.756.8000 • www.h2m.com

CONSULTANTS:

MARK	DATE	DESCRIPTION
2	12/22/2022	REVS. PER TOWN COMMENTS

REGISTERED ARCHITECT ROBERT BEE 032389 STATE OF NEW YORK

"ALTERATION OF THIS DOCUMENT EXCEPT BY A LICENSED PROFESSIONAL IS ILLEGAL"

DESIGNED BY:	DRAWN BY:	CHECKED BY:	REVIEWED BY:
FRM	FRM		

PROJECT No.:	DATE:	SCALE:
VGFD2001	JULY 2022	AS SHOWN

CLIENT
VAILS GATE FIRE DISTRICT

New Storage Building (Phase I)
New Fire Station (Phase II)

872 Blooming Grove Turnpike
New Windsor, NY 12553

CONTRACT
CONTRACT G
GENERAL CONSTRUCTION

STATUS
FINAL BID DOCUMENT

SHEET TITLE
ARCHITECTURE
FIRST FLOOR, ROOF PLAN AND DETAILS
NEW STORAGE BUILDING
PHASE 1

DRAWING No.
A1 100.02

X:\VGFD\Vails Gate Fire Dept\VGFD2001-Vails Gate FD-New Firehouse\02-BIM-CADD\Con-docs\arch\A1-100.00 - Floor Plan.dwg | Last Modified: Jan 13, 2023 - 9:43am Plotted on: Jan 13, 2023 - 1:09pm By jpizzman

R-Values removed from plans- only shown on Comcheck and specifications

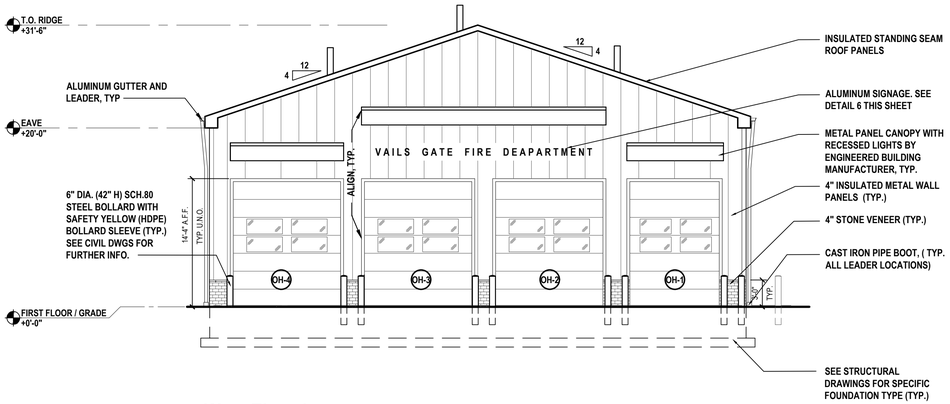

1 **West Elevation**
SCALE: 1/8"= 1'-0"

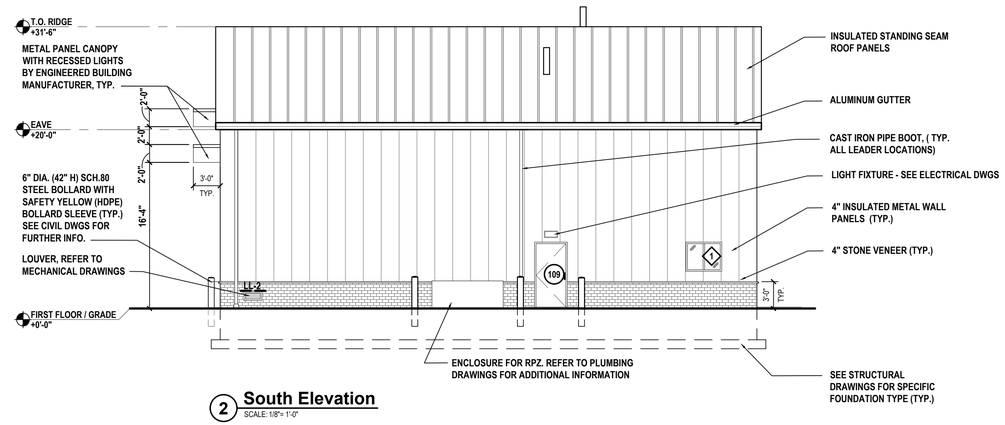

2 **South Elevation**
SCALE: 1/8"= 1'-0"

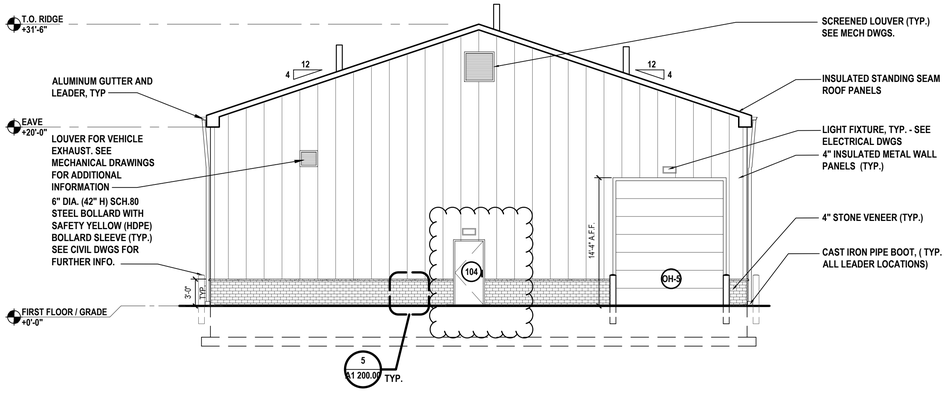

3 **East Elevation**
SCALE: 3/16" = 1'-0"

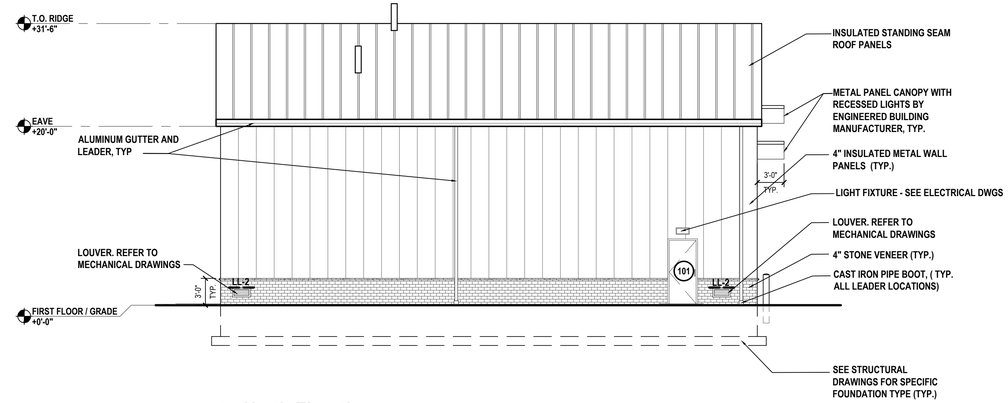

4 **North Elevation**
SCALE: 3/16" = 1'-0"

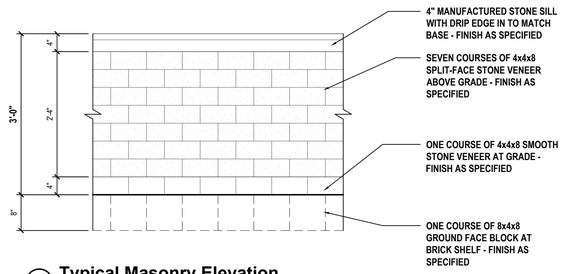

5 **Typical Masonry Elevation**
SCALE: 3/4" = 1'-0"

WALL MOUNTED ALUMINUM SIGNAGE

NOTE: SEE SPECIFICATION FOR FINAL COLOR AND FONT

6 **Aluminum SIgnage**
SCALE: 3/8" = 1'-0"

H 2 M architects + engineers

538 Broad Hollow Road, 4th Floor East
Melville, NY 11747
631.756.8000 • www.h2m.com

CONSULTANTS:

MARK	DATE	DESCRIPTION
2	12/22/2022	REVS. PER TOWN COMMENTS
1	08/19/2022	ADDENDUM #1

REGISTERED ARCHITECT ROBERT BEE 032389 STATE OF NEW YORK

"ALTERATION OF THIS DOCUMENT EXCEPT BY A LICENSED PROFESSIONAL IS ILLEGAL"

DESIGNED BY:	DRAWN BY:	CHECKED BY:	REVIEWED BY:
FRM	FRM		
PROJECT No.: VGFD2001	DATE: JULY 2022		SCALE: AS SHOWN

CLIENT

VAILS GATE FIRE DISTRICT

New Storage Building (Phase I)
New Fire Station (Phase II)

872 Blooming Grove Turnpike
New Windsor, NY 12553

CONTRACT

CONTRACT G
GENERAL CONSTRUCTION

STATUS

FINAL BID DOCUMENT

SHEET TITLE

ARCHITECTURE
EXTERIOR ELEVATIONS
NEW STORAGE BUILDING
PHASE 1

DRAWING No.

A1 200.02

\\h2m.com\shares\Projects\VGFD \Vails Gate Fire Dept\VGFD2001-\Vails Gate FD-New Firehouse\02-BIM-CADD\Con-docs\arch\A1-200.05- Elevations.dwg Last Modified: Dec 21, 2022 - 11:29am Plotted on: Dec 21, 2022 - 11:29am By jgusman

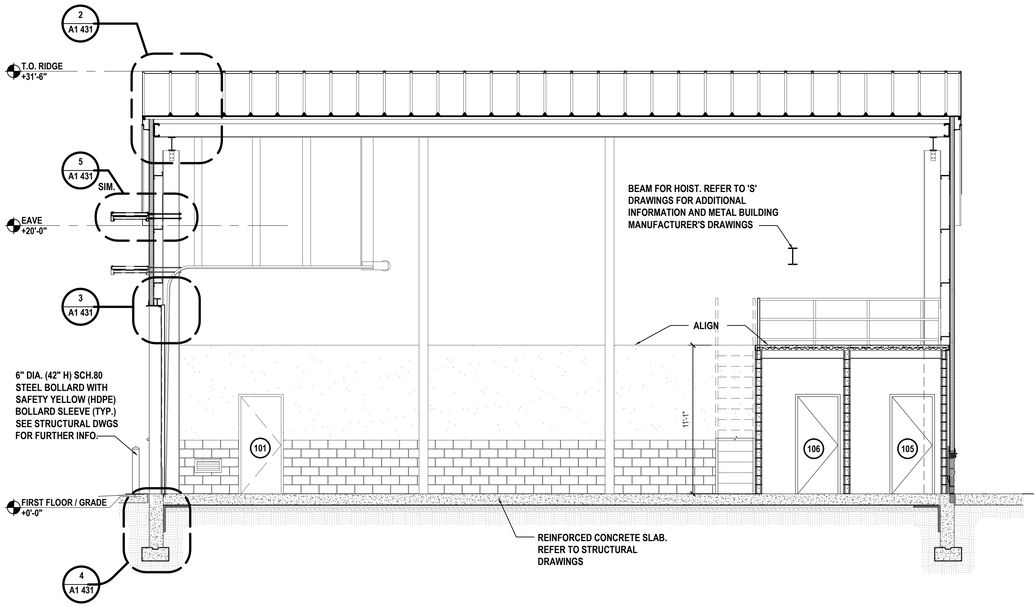

1 **Section**
SCALE: 3/16" = 1'-0"

R-Values removed from plans- only shown on Comcheck and specifications

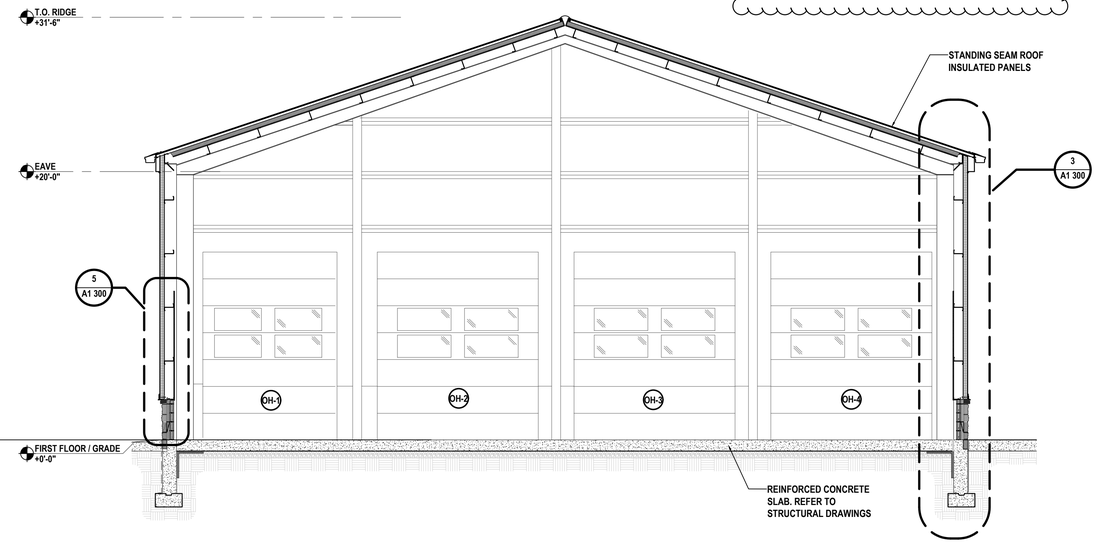

2 **Section**
SCALE: 3/16" = 1'-0"

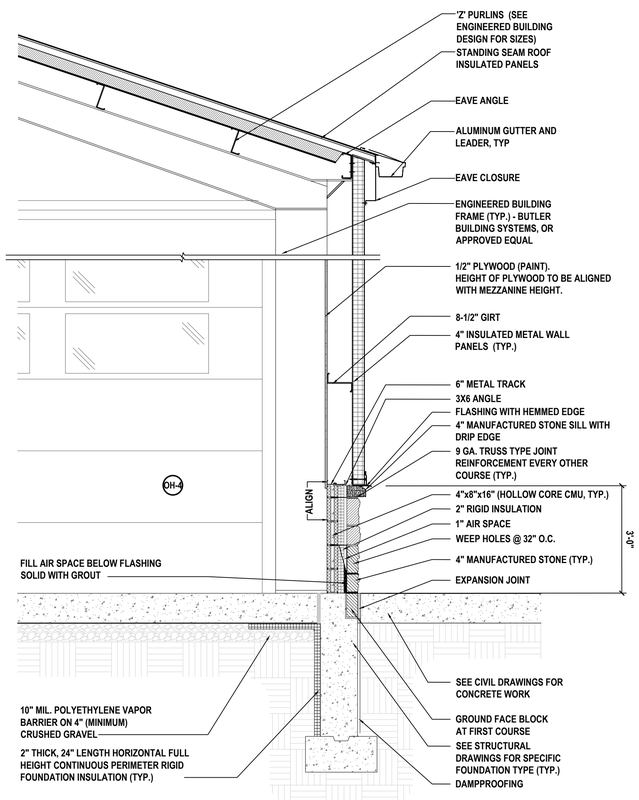

3 **Detail**
SCALE: 1/2" = 1'-0"

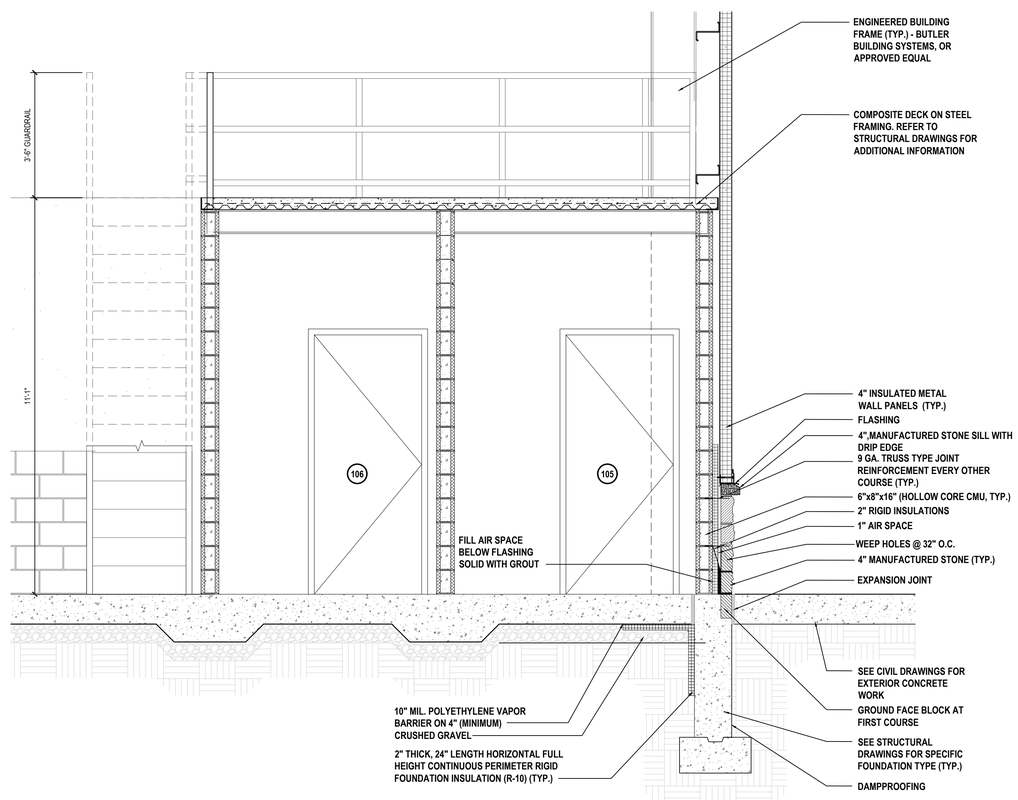

4 **Detail**
SCALE: 1/2" = 1'-0"

BUILDING SECTION NOTES

1. FOOTING AND FOUNDATION DEPTHS, SIZES, REINFORCING, ETC. PROVIDED IN SECTIONS ARE FOR DIAGRAMMATIC PURPOSES ONLY. SEE 'S' DRAWINGS FOR ACTUAL SIZES.
2. ALL FIRE RATED WALLS ARE TO HAVE A CONTINUOUS FIRE RATING FROM TOP OF SLAB TO BOTTOM OF ROOF DECK ABOVE. ALL PENETRATIONS IN FIRE RATED WALLS AS WELL AS THE JUNCTURE AT TOP OF WALL BELOW ARE TO BE FIRESTOPPED WITH AN APPROPRIATE APPROVED FIRESTOPPING MATERIALS.
3. FOR ALL DOORS DENOTED AS - SEE DOOR SCHEDULE FOR ADDITIONAL INFORMATION.

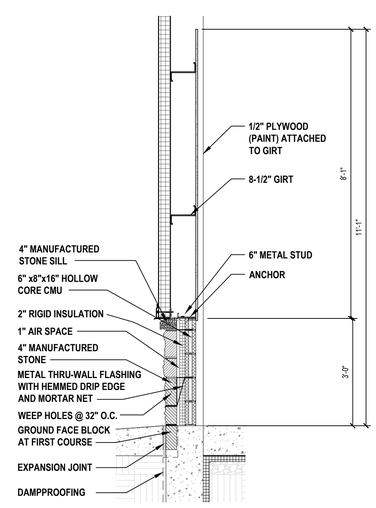

5 **Detail**
SCALE: 1/2" = 1'-0"

H 2 M architects + engineers

538 Broad Hollow Road, 4th Floor East
Melville, NY 11747
631.756.8000 • www.h2m.com

CONSULTANTS:

MARK	DATE	DESCRIPTION
2	12/22/2022	REVS. PER TOWN COMMENTS

REGISTERED ARCHITECT ROBERT BEE 032389 STATE OF NEW YORK

"ALTERATION OF THIS DOCUMENT EXCEPT BY A LICENSED PROFESSIONAL IS ILLEGAL"

DESIGNED BY:	DRAWN BY:	CHECKED BY:	REVIEWED BY:
FRM	FRM		
PROJECT No.: VGFD2001	DATE: JULY 2022		SCALE: AS SHOWN

CLIENT

VAILS GATE FIRE DISTRICT

New Storage Building (Phase I)
New Fire Station (Phase II)

872 Blooming Grove Turnpike
New Windsor, NY 12553

CONTRACT

CONTRACT G
GENERAL CONSTRUCTION

STATUS

FINAL BID DOCUMENT

SHEET TITLE

ARCHITECTURE
BUILDING SECTIONS
NEW STORAGE BUILDING
PHASE 1

DRAWING No.

A1 300.02

C:\Users\jgaman\appdata\local\temp\AcPublish_30756\A1-300.05-Building Sections.dwg Last Modified: Dec 21, 2022 - 11:13am Plotted on: Dec 21, 2022 - 11:13am By jgaman

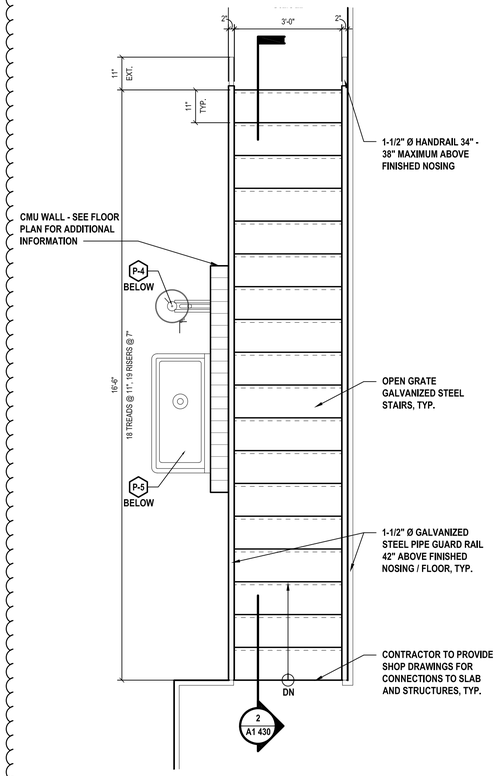

1 Enlarged Stair Plan @ Mezzanine
SCALE: 1/2" = 1'-0"

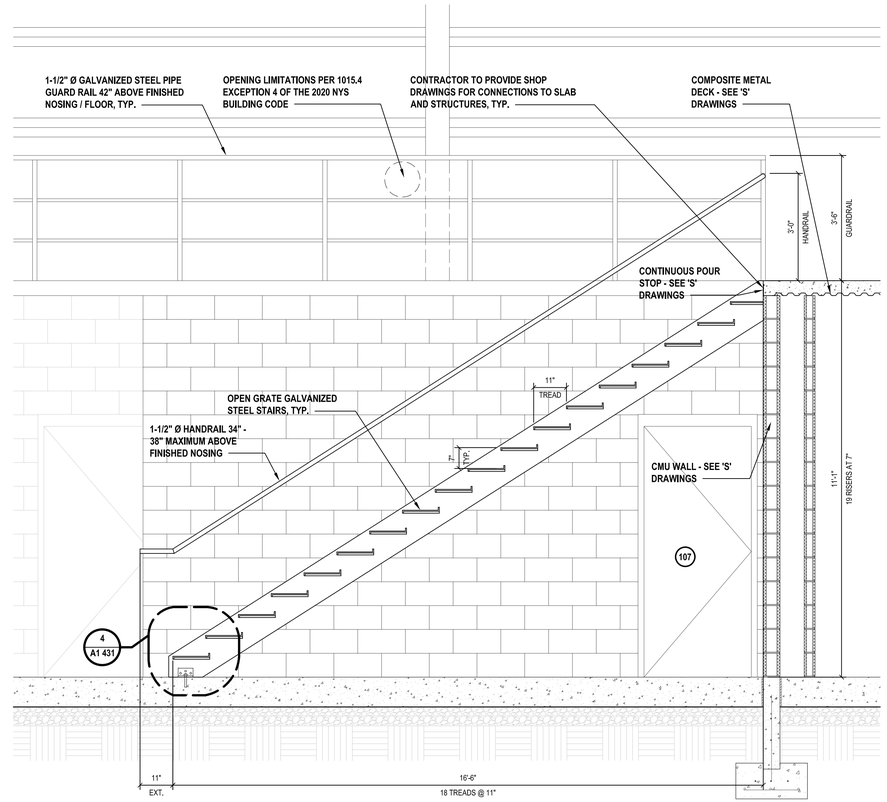

2 Enlarged Stair Section @ Mezzanine
SCALE: 1/2" = 1'-0"

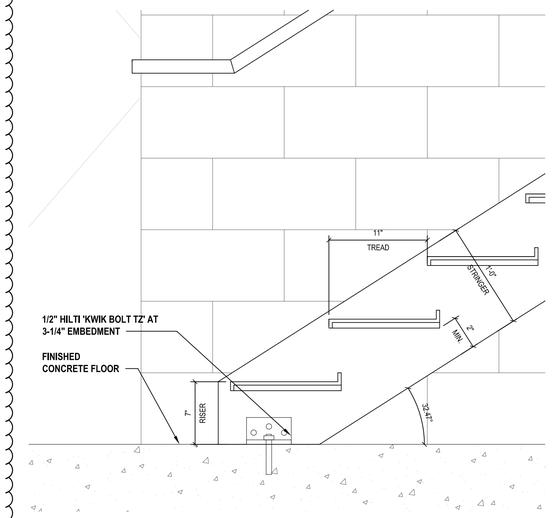

3 Stair Detail
SCALE: 1 1/2" = 1'-0"

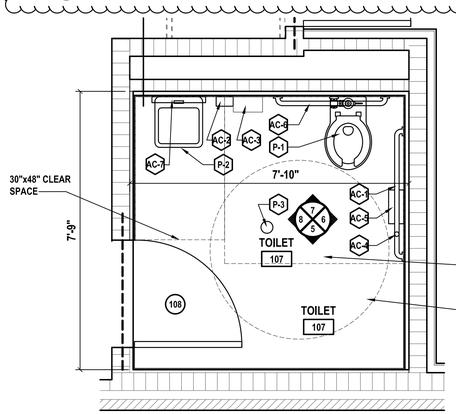

4 EnlargedToilet Plan
SCALE: 1/2" = 1'-0"

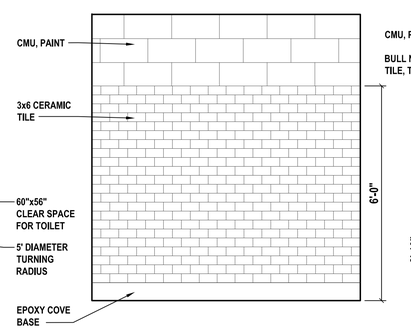

5 Interior Elevation
SCALE: 1/2" = 1'-0"

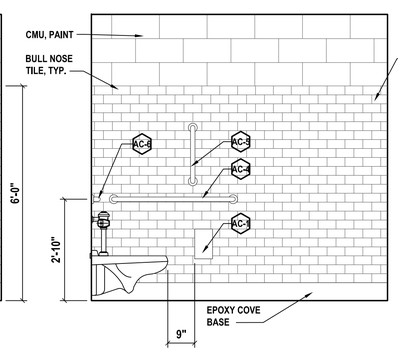

6 Interior Elevation
SCALE: 1/2" = 1'-0"

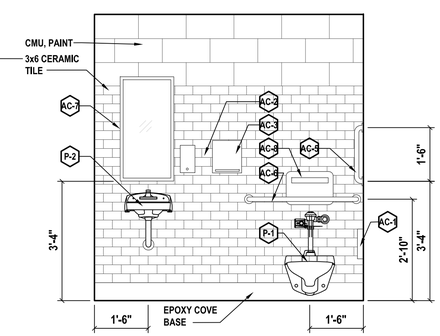

7 Interior Elevation
SCALE: 1/2" = 1'-0"

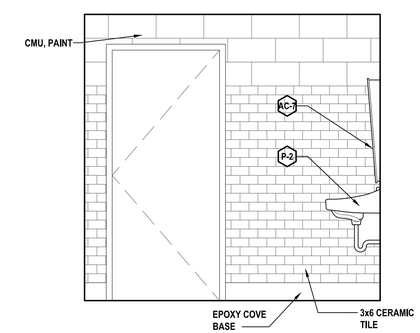

8 Interior Elevation
SCALE: 1/2" = 1'-0"

RESTROOM ACCESSORY SCHEDULE - (SEE SPECIFICATIONS FOR MAKE AND MODEL)

MARK	DESCRIPTION	QUANTITIES	REMARKS
AC-1	SURFACE MOUNTED TOILET PAPER DISPENSER	1	-
AC-2	SURFACE MOUNTED SOAP DISPENSER	1	
AC-3	SURFACE MOUNTED PAPER TOWEL DISPENSER	1	
AC-4	42" GRAB BAR	1	
AC-5	18" GRAB BAR	1	
AC-6	36" GRAB BAR	1	
AC-7	MIRROR	1	
AC-8	RECESSED TOILET-SEAT-COVER DISPENSER	1	

PLUMBING FIXTURE SCHEDULE - (SEE P SHEETS)

MARK	DESCRIPTION
P-1	WALL MOUNTED TOILET (ADA)
P-2	WALL MOUNTED SINK (ADA)
P-3	FLOOR DRAIN/STRAINER
P-4	EMERGENCY EYE WASH
P-5	GANG SINK

GENERAL RESTROOM NOTES

1. ALL PAINTING SHALL BE PERFORMED IN ACCORDANCE WITH THE REQUIREMENTS CONTAINED IN DIVISION 09 OF THE SPECIFICATIONS.
2. THIS DRAWING SERVES AS A GENERAL LIST OF THE FINISH ITEMS AND IS NOT A LIST OF ALL FINISH ITEMS WITHIN A ROOM OR SPACE. REFER TO ALL CONTRACT DOCUMENTS, DRAWINGS, AND SPECIFICATIONS TO DETERMINE ALL REQUIRED FINISHES AND FINISH ITEMS.
3. MOUNTING LOCATIONS OF RESTROOM FIXTURES IS TO BE REVIEWED AND APPROVED IN FIELD BY OWNER. MOUNTING HEIGHTS/LOCATIONS SHALL BE ADA COMPLIANT. REFER TO ACCESSIBILITY SHEETS FOR ADDITIONAL INFORMATION.
4. PROVIDE CONCEALED WOOD BLOCKING BEHIND ALL WALLS IN AREAS TO RECEIVE ACCESSORIES.
5. REFER TO PLUMBING DRAWINGS FOR COORDINATION OF ALL PLUMBING FIXTURES AND FIXTURE SCHEDULES.
6. RESTROOM ACCESSORIES ARE SHOWN FOR REFERENCE ONLY. NOT ALL ACCESSORIES MAY BE SHOWN. REFER TO SPECIFICATIONS AND THE ACCESSORY SCHEDULE ON THIS SHEET FOR ADDITIONAL INFORMATION.

H2M architects + engineers
538 Broad Hollow Road, 4th Floor East
Melville, NY 11747
631.756.8000 • www.h2m.com

CONSULTANTS:

MARK	DATE	DESCRIPTION
2	12/22/2022	REVS. PER TOWN COMMENTS

REGISTERED ARCHITECT ROBERT BEE 032389 STATE OF NEW YORK

"ALTERATION OF THIS DOCUMENT EXCEPT BY A LICENSED PROFESSIONAL IS ILLEGAL"

DESIGNED BY:	DRAWN BY:	CHECKED BY:	REVIEWED BY:
FRM	FRM		
PROJECT No.: VGFD2001	DATE: JULY 2022		SCALE: AS SHOWN

CLIENT
VAILS GATE FIRE DISTRICT

New Storage Building (Phase I)
New Fire Station (Phase II)

872 Blooming Grove Turnpike
New Windsor, NY 12553

CONTRACT
CONTRACT G
GENERAL CONSTRUCTION

STATUS
FINAL BID DOCUMENT

SHEET TITLE
ARCHITECTURE
ENLARGED STAIR PLAN, TOILET PLAN, AND SCHEDULE
NEW STORAGE BUILDING
PHASE 1

DRAWING No.
A1 430.00

X:\VGFD \Vails Gate Fire Dept\VGFD2001\Vails Gate FD-New Firehouse\02-BIM-CADD\Con-docs\arch\A1-430.00-ENLARGED STAIR PLAN, ENLARGED TOILET PLAN, PLUMBING AND RESTROOM ACCESSORY SCHEDULE.dwg Last Modified: Jan 13, 2023 - 1:04pm Plotted on: Jan 13, 2023 - 1:05pm By:jgusman

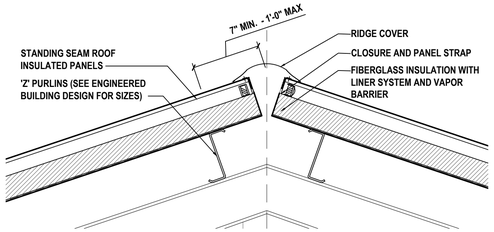

1 **Ridge Detail**
SCALE: 1" = 1'-0"

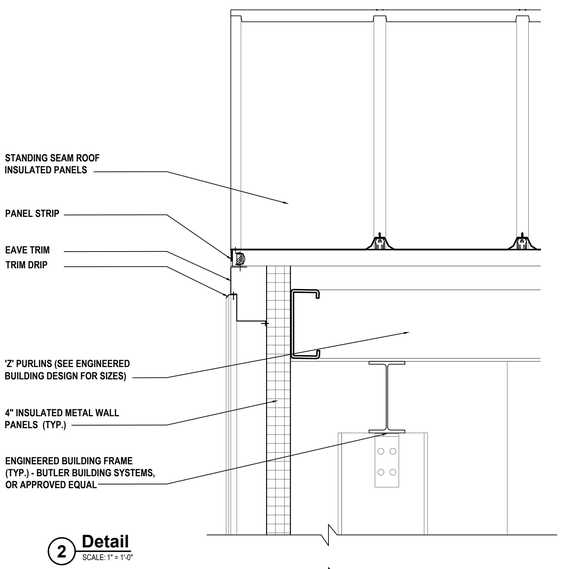

2 **Detail**
SCALE: 1" = 1'-0"

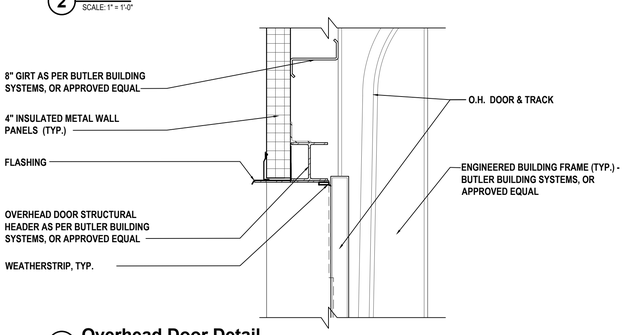

3 **Overhead Door Detail**
SCALE: 1" = 1'-0"

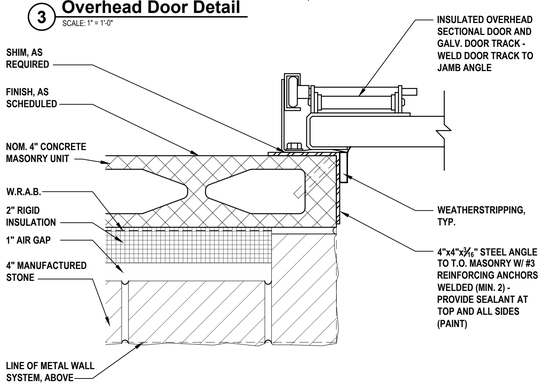

ELEVATION 0'-0" TO 2'-8" A.F.F.

6 **Overhead Door Jamb Detail Masonry**
SCALE: 3"=1'-0"

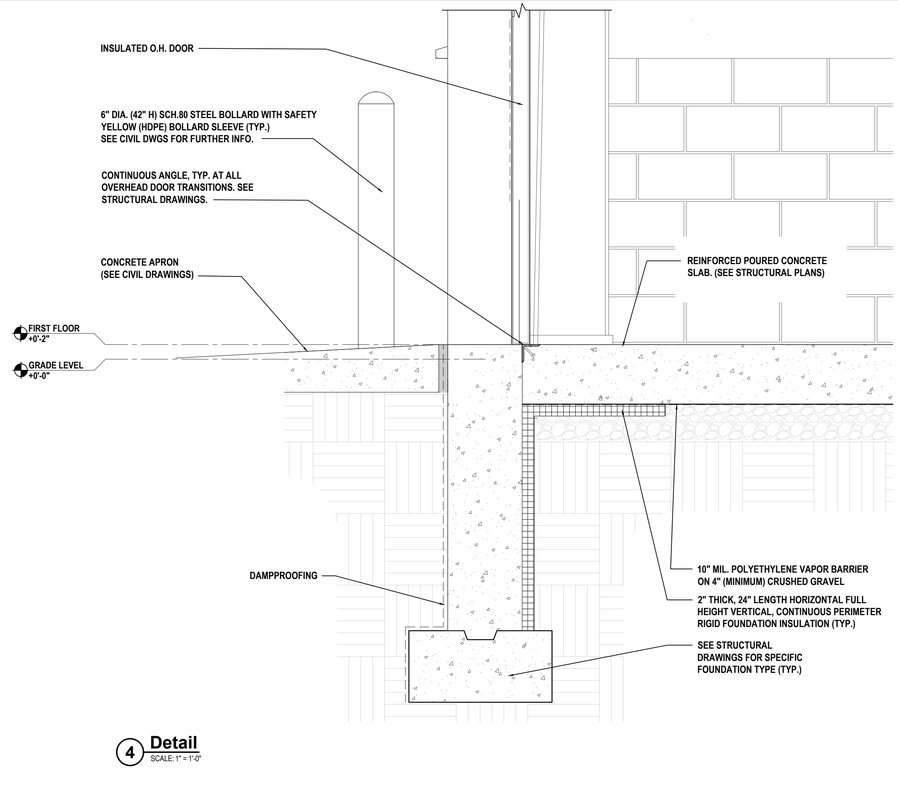

4 **Detail**
SCALE: 1" = 1'-0"

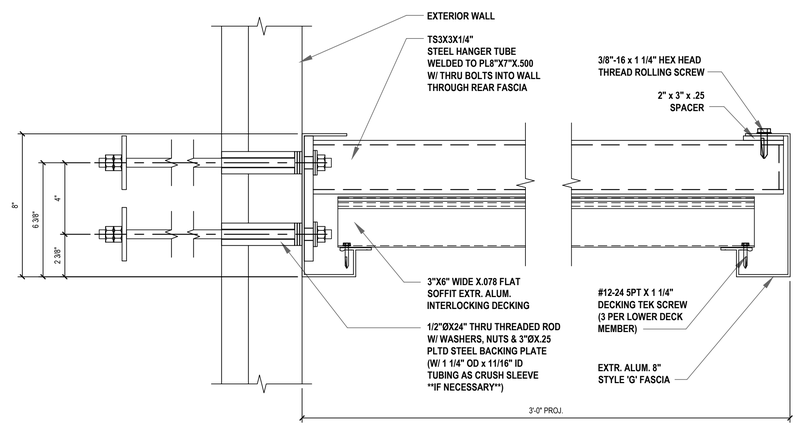

5 **Canopy Detail**
SCALE: 3" = 1'-0"

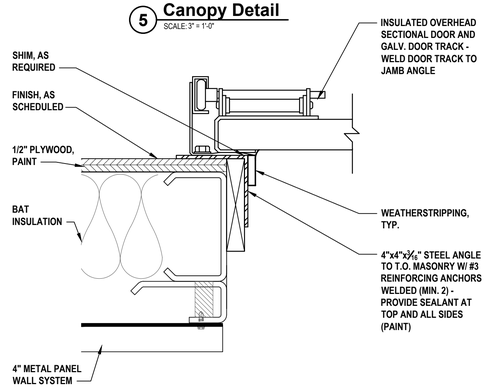

7 **Overhead Door Jamb Detail - Metal Panel**
SCALE: 3"=1'-0"

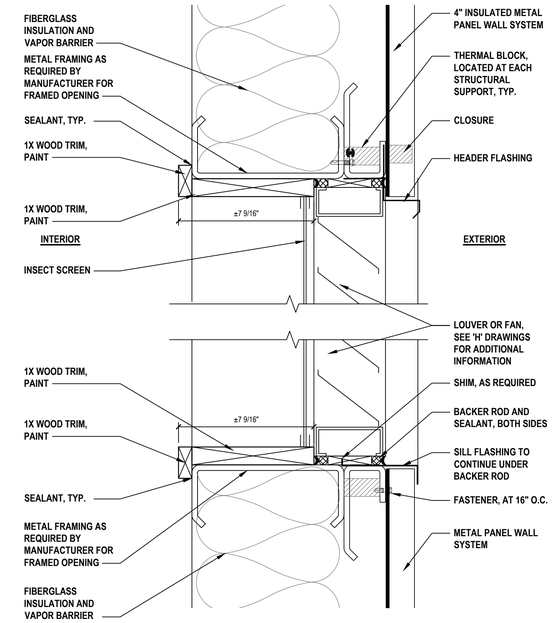

8 **Louver/Fan Head and Sill Detail at Metal Panels**
SCALE: 3"=1'-0"

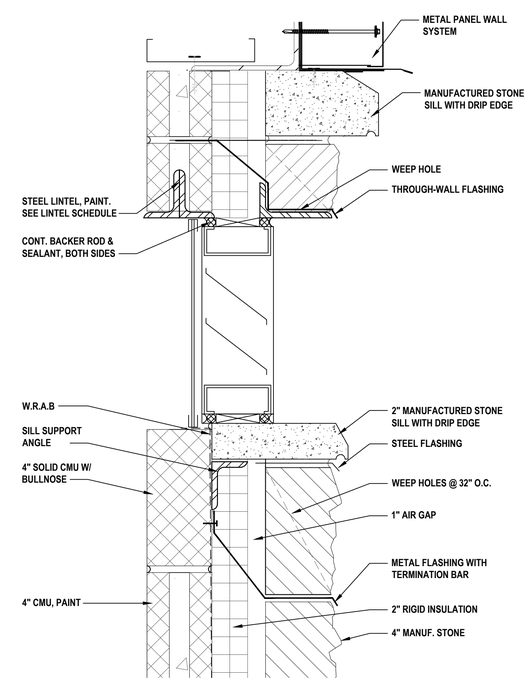

9 **Louver/Fan Head and Sill Detail at Masonry**
SCALE: 3"=1'-0"

R-Values removed from plans- only shown on Comcheck and specifications

H2M architects + engineers
538 Broad Hollow Road, 4th Floor East
Melville, NY 11747
631.756.8000 • www.h2m.com

CONSULTANTS:

MARK	DATE	DESCRIPTION
2	12/22/2022	REVS. PER TOWN COMMENTS

REGISTERED ARCHITECT ROBERT BEE 032389 STATE OF NEW YORK

"ALTERATION OF THIS DOCUMENT EXCEPT BY A LICENSED PROFESSIONAL IS ILLEGAL"

DESIGNED BY:	DRAWN BY:	CHECKED BY:	REVIEWED BY:
FRM	FRM		
PROJECT No: VGFD2001	DATE: JULY 2022	SCALE: AS SHOWN	

CLIENT
VAILS GATE FIRE DISTRICT

New Storage Building (Phase I)
New Fire Station (Phase II)

872 Blooming Grove Turnpike
New Windsor, NY 12553

CONTRACT
CONTRACT G
GENERAL CONSTRUCTION

STATUS
FINAL BID DOCUMENT

SHEET TITLE
ARCHITECTURE
ENLARGED DETAILS
NEW STORAGE BUILDING
PHASE 1

DRAWING No.
A1 431.00

C:\Users\jgusman\appdata\local\temp\AcPublish_30756\A1-431.00-ENLARGED DETAILS.dwg Last Modified: Dec 21, 2022 - 11:21am Plotted on: Dec 21, 2022 - 11:23am By jgusman

DOOR SCHEDULE

DOOR NO.	LOCATION FROM	LOCATION TO	SIZE WIDTH	SIZE HEIGHT	DOOR TYPE.	MATERIAL	FINISH	FRAME DETAIL	SADDLE TYPE	SELF CLOSING	PANIC DEVICE	WEATHER-STRIPPING	REMARKS
101	STORAGE 101	EXTERIOR	3'-0"	7'-0"	A	HM	PT	H-1 / J-1	S-1	●	●	●	INS. CORE
102	STORAGE 101	STORAGE 102	3'-0"	7'-0"	A	HM	PT	H-2 / J-2		●			LOUVER
103	STORAGE 101	STORAGE 103	3'-0"	7'-0"	A	HM	PT	H-2 / J-2		●			LOUVER
104	STORAGE 101	EXTERIOR	3'-0"	7'-0"	A	HM	PT	H-1 / J-1	S-1	●	●	●	INS. CORE
105	STORAGE 101	UTILITY 105	3'-0"	7'-0"	A	HM	PT	H-2 / J-2		●			LOUVER
106	STORAGE 101	STORAGE 104	3'-0"	7'-0"	A	HM	PT	H-2 / J-2		●			LOUVER
107	STORAGE 101	OFFICE 106	3'-0"	7'-0"	A	HM	PT	H-3 / J-3		●			
108	STORAGE 101	TOILET 107	3'-0"	7'-0"	A	HM	PT	H-3 / J-3		●			LOUVER
109	STORAGE 101	EXTERIOR	3'-0"	7'-0"	A	HM	PT	H-1 / J-1	S-1	●	●	●	INS. CORE
OH-1	STORAGE 101	EXTERIOR	10'-0"	14'-0"		INSULATED STEEL	PRE-FIN	SEE A-004	-	-	-	●	
OH-2	STORAGE 101	EXTERIOR	12'-0"	14'-0"		INSULATED STEEL	PRE-FIN	SEE A-004	-	-	-	●	
OH-3	STORAGE 101	EXTERIOR	12'-0"	14'-0"		INSULATED STEEL	PRE-FIN	SEE A-004	-	-	-	●	
OH-4	STORAGE 101	EXTERIOR	12'-0"	14'-0"		INSULATED STEEL	PRE-FIN	SEE A-004	-	-	-	●	
OH-5	STORAGE 101	EXTERIOR	12'-0"	14'-0"		INSULATED STEEL	PRE-FIN	SEE A-004	-	-	-	●	

DOOR ABBREVIATIONS:
FRP= FIBERGLASS REINFORCED PLASTIC EX= EXISTING ALUM.= ALUMINUM
PT= PAINT HM= HOLLOW METAL MANUF. = MANUFACTURER'S FINISH

FINISH SCHEDULE

ROOM NO.	ROOM NAME	FLOOR MAT.	FLOOR FINISH	FLOOR BASE	NORTH WALL MAT.	NORTH WALL FINISH	EAST WALL MAT.	EAST WALL FINISH	SOUTH WALL MAT.	SOUTH WALL FINISH	WEST WALL MAT.	WEST WALL FINISH	CEILING MAT.	CEILING FINISH	CEILING HGT.	REMARKS
101	STORAGE	CONC.	EPOXY	1 / A-006	CMU / GYP.BD	PT.	CMU / GYP.BD	PT.	CMU / GYP.BD	PT.	CMU / GYP.BD	PT.	EXP.			
102	STORAGE	CONC.	EPOXY	1 / A-006	CMU	PT.	CMU	PT.	CMU	PT.	CMU	PT.	EXP.			
103	STORAGE	CONC.	EPOXY	1 / A-006	CMU	PT.	CMU	PT.	CMU	PT.	CMU	PT.	EXP.			
104	STORAGE	CONC.	EPOXY	1 / A-006	CMU	PT.	CMU	PT.	CMU	PT.	CMU	PT.	EXP.			
105	UTILITY	CONC. SLD	-		CMU	PT.	CMU	PT.	CMU	PT.	CMU	PT.	EXP.			
106	OFFICE	CONC.	EPOXY	1 / A-006	GYP. BD	PT.	GYP. BD	PT.	GYP. BD	PT.	GYP. BD	PT.	EXP.			PAINT UNDERSIDE OF METAL DECK ABOVE
107	TOILET	CONC.	EPOXY	1 / A-006	GYP. BD	CT.	GYP. BD	CT	GYP. BD	CT	GYP. BD	CT	EXP.			PAINT UNDERSIDE OF METAL DECK ABOVE

ABBREVIATIONS:
EXP = EXPOSED GYP. BD = GYPSUM BOARD CONC = CONCRETE
PT = PAINT CT = CERAMIC TILE

WINDOW SCHEDULE

FLOOR	ROOM No.	ROOM NAME	WINDOW TYPE	WINDOW QTY.	WINDOW M.O. HEIGHT	WINDOW M.O. WIDTH	FRAME DETAILS HEAD	FRAME DETAILS JAMB	SILL	REMARKS
FIRST	106	OFFICE	A	1	4'-0"	3'-4"	A	B	C	

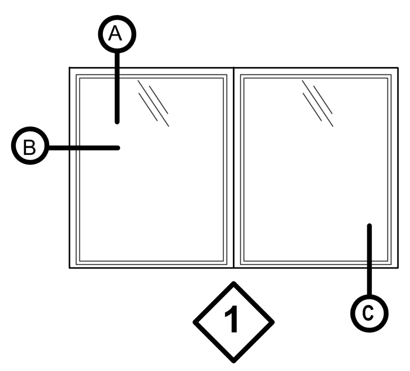

Window Type
SCALE: NOT TO SCALE

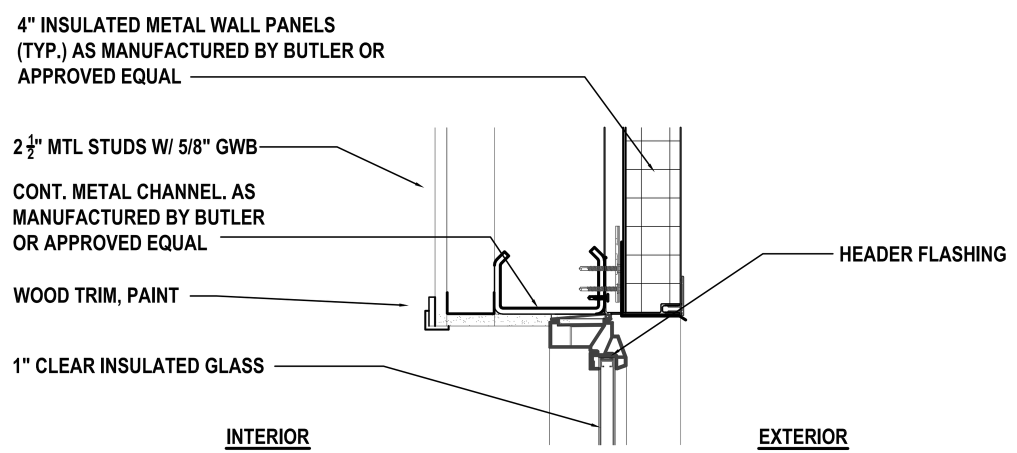

A **Head Detail**
SCALE: N.T.S.

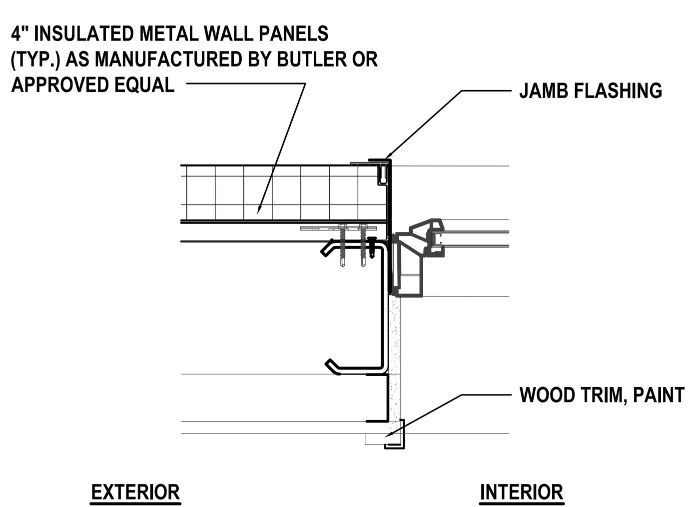

B **Jamb Detail**
SCALE: N.T.S.

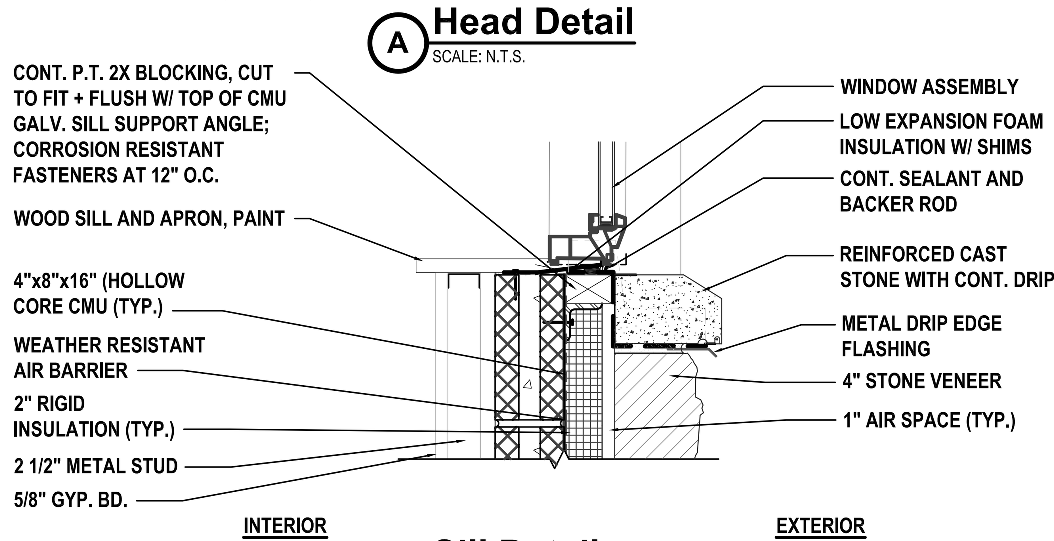

C **Sill Detail**
SCALE: N.T.S.

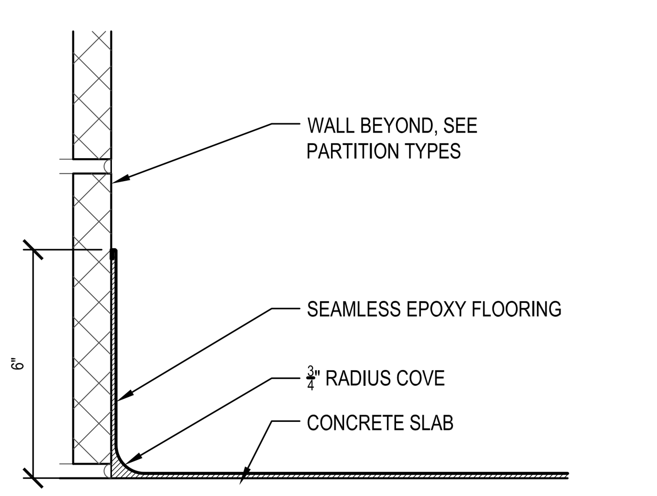

1 **Epoxy Cove Base Detail**
SCALE: 3"=1'-0"

GENERAL DOOR NOTES

1. ALL EXTERIOR DOORS AND DOORS IN FIRE RATED PARTITIONS ARE TO BE SELF CLOSING AND SELF-LATCHING.
2. ALL EXTERIOR DOORS ARE TO BE WEATHERSTRIPPED AS PER 2020 NYSECC.
3. ALL INTERIOR DOORS SHALL HAVE A 1/2" UNDERCUT. CONTRACTOR TO VERIFY IN FIELD AND COORDINATE WITH FINISHES.
4. SEE SPECIFICATIONS FOR DOOR LOCK SET INFORMATION.
5. FOR EXTERIOR DOOR AIR LEAKAGE: PROVIDE FLASHING, EXPANDABLE FOAM SEALANT, AND CAULKING AT ROUGH OPEING/DOOR FRAME JOINTS TO CREATE A CONTINUOUS AIR BARRIER WITH SURROUNDING WALL SYSTEM.
6. FOR DOOR SWING/HINGE LOCATIONS, REFER TO FLOOR PLANS.
7. REFER TO ELECTRICAL DRAWINGS FOR ACCESS CONTROL PROVISIONS AT NEW DOOR AND FRAME INSTALLATIONS AS INDICATED.
8. ALL DOOR FRAMES TO BE SET 4" FROM FINISHED WALL SURFACE UNLESS DIMENSIONED OR NOTED OTHERWISE.
9. ALL HOLLOW METAL FRAMES SET IN MASONRY WALLS TO HAVE 4" HEAD.

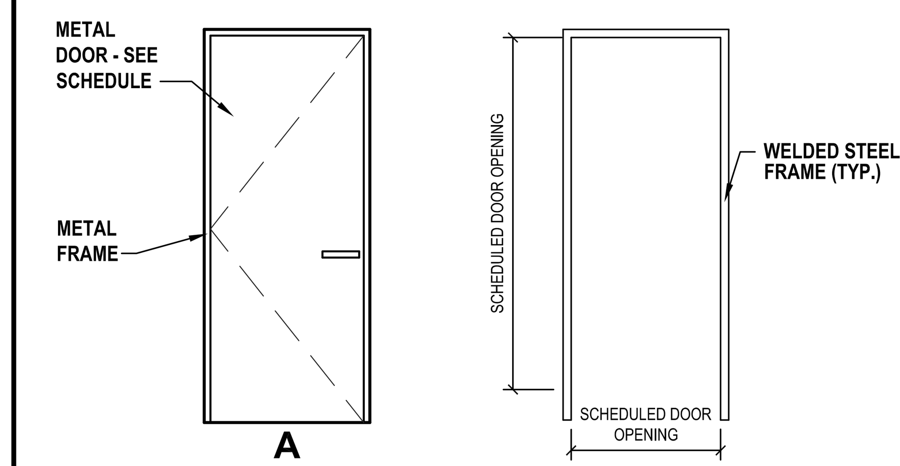

Door Types
SCALE: NOT TO SCALE
Hollow Metal Door Frame
SCALE: NOT TO SCALE

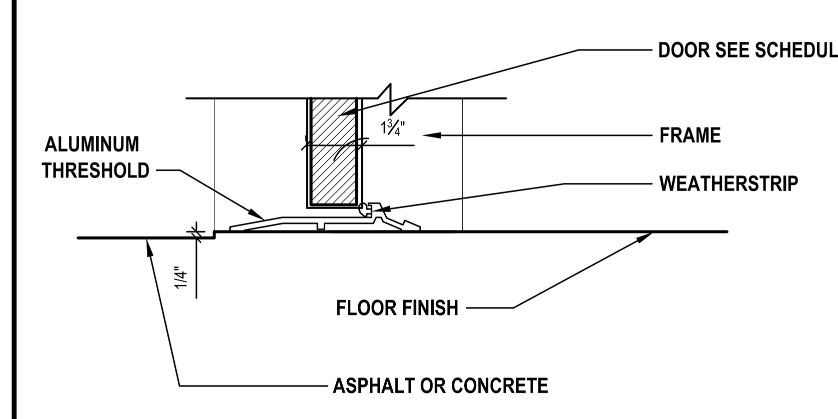

S-1 **Saddle Detail**
SCALE: N.T.S.

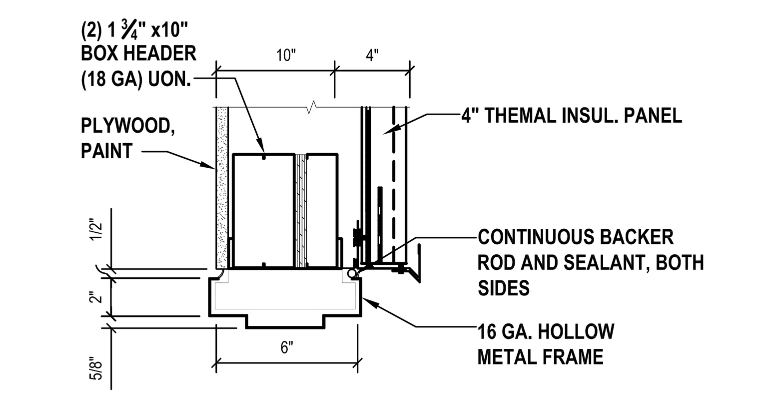

H-1 **Head Detail**
SCALE: N.T.S.

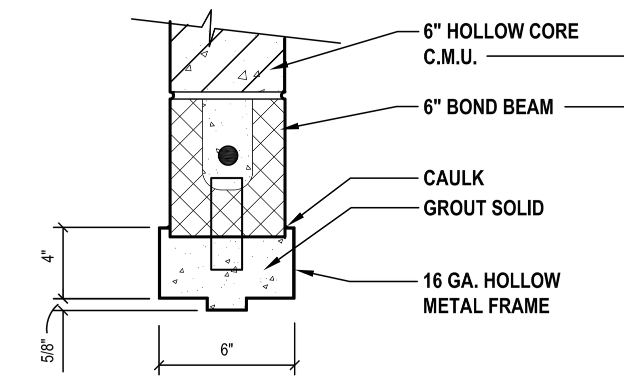

H-2 **Head Detail**
SCALE: N.T.S.

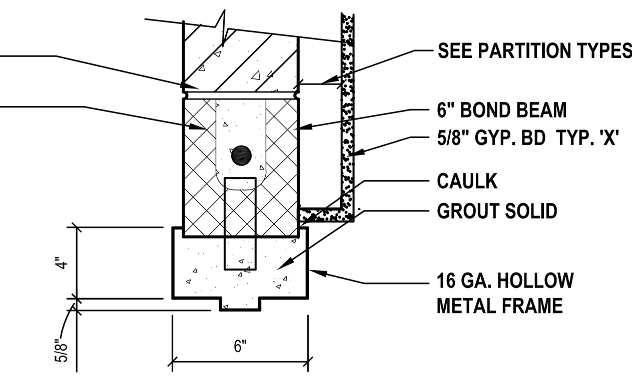

H-3 **Head Detail**
SCALE: N.T.S.

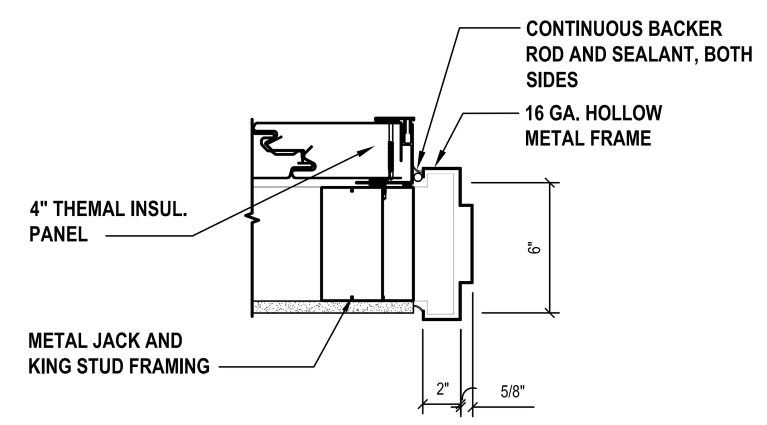

J-1 **Jamb Detail**
SCALE: N.T.S.

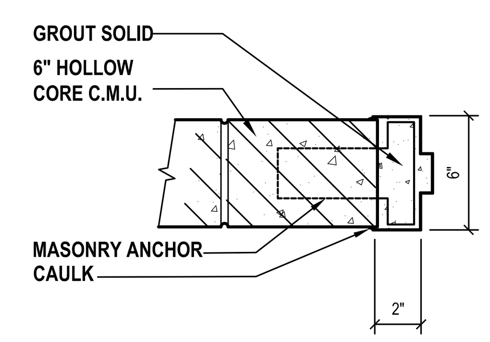

J-2 **Jamb Detail**
SCALE: N.T.S.

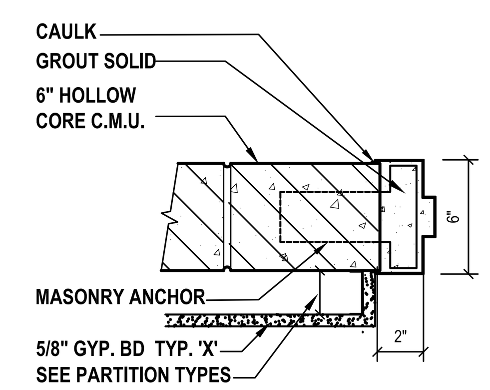

J-3 **Jamb Detail**
SCALE: N.T.S.

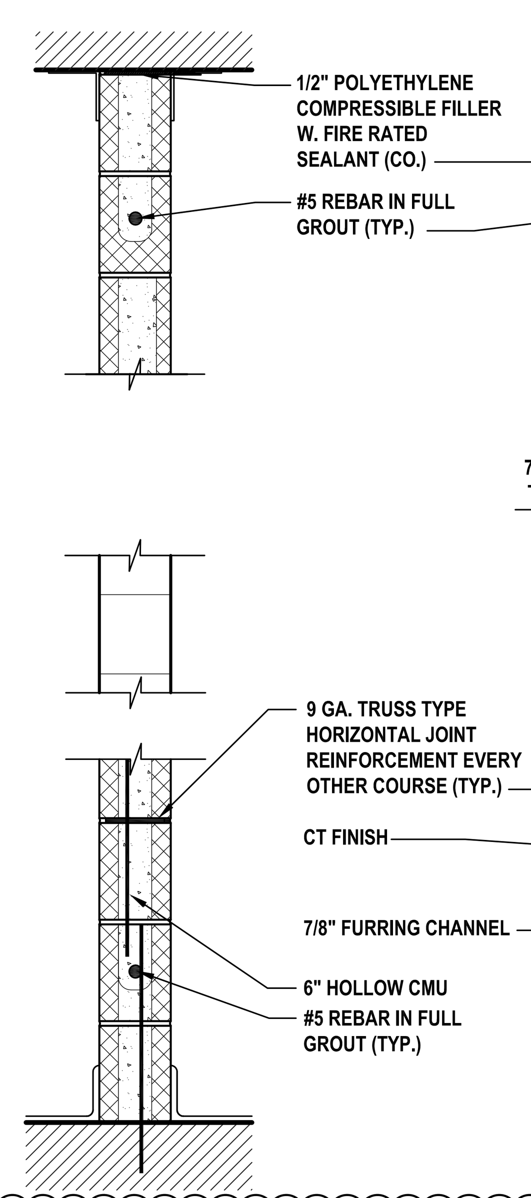

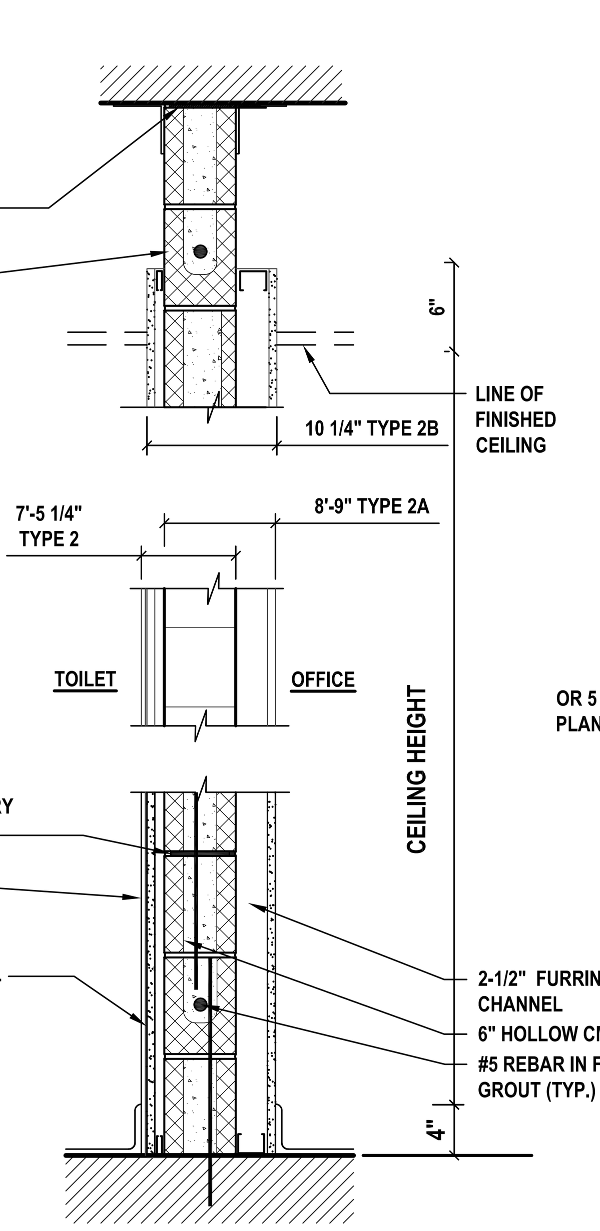

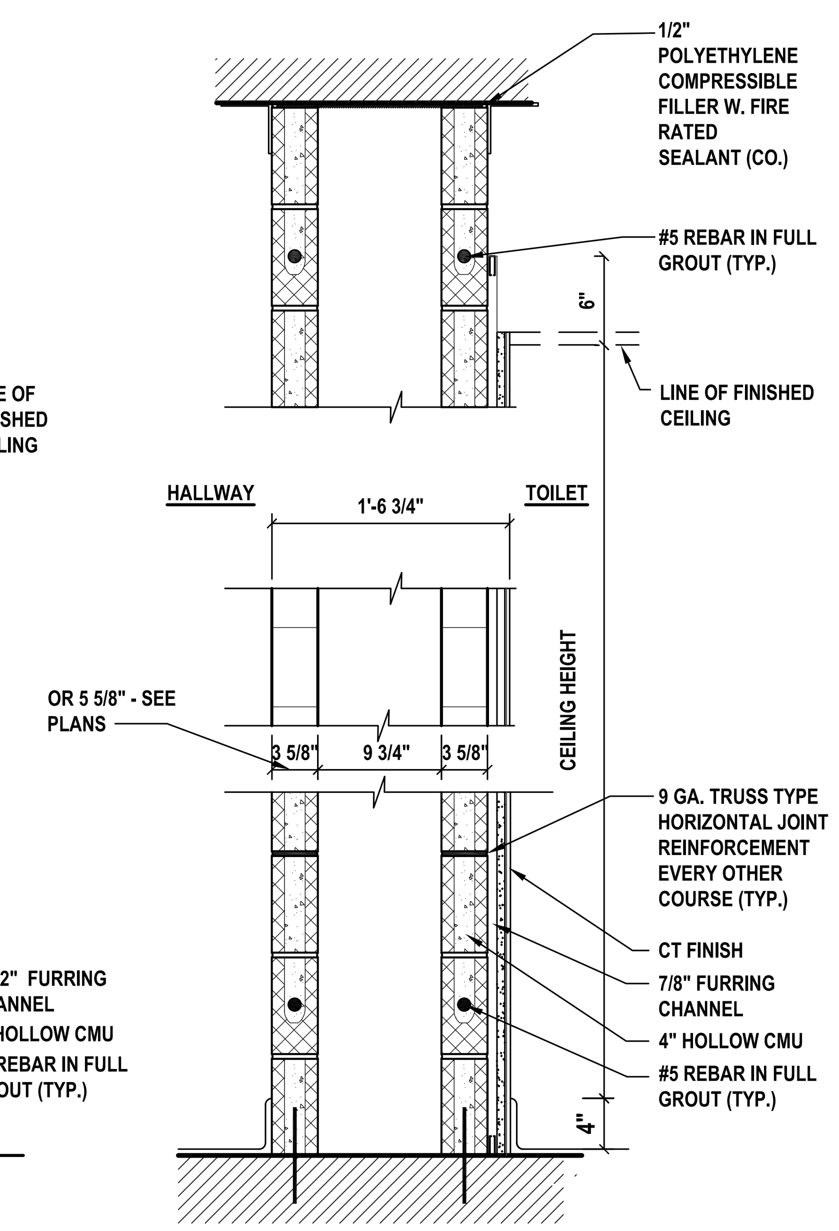

R-Values removed from plans- only shown on Comcheck and specifications

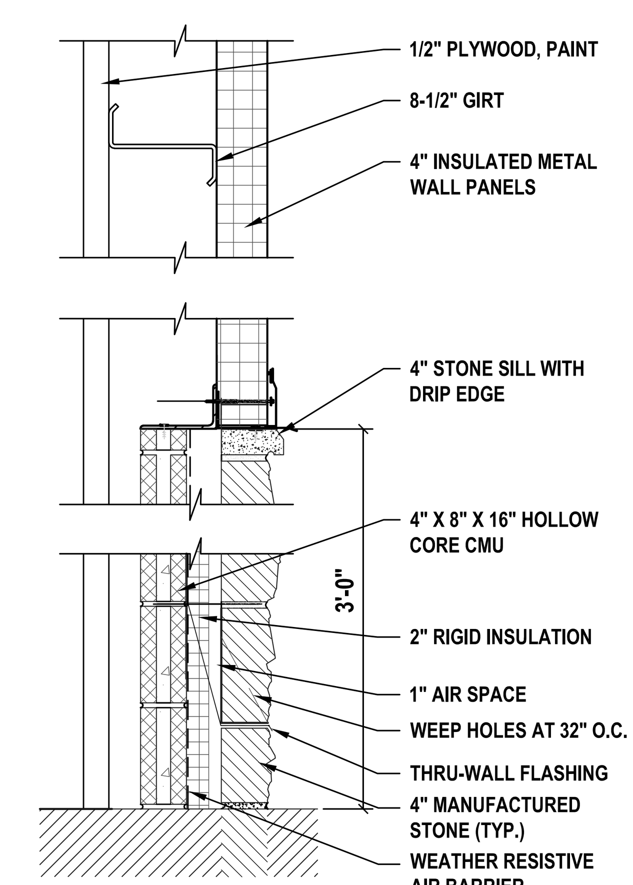

1 **6"(HOLLOW) CMU**
6" (HOLLOW) CMU (PAINTED)

2 **6"(HOLLOW) CMU - AT TOILET**
6" (HOLLOW) CMU WITH 7/8" FURRING CHANNEL, (1) 5/8" LAYER WRGWB ON ONE SIDE W/ CERAMIC TILE

2A **6"(HOLLOW) CMU - AT OFFICE**
6" (HOLLOW) CMU WITH 2-1/2" FURRING CHANNEL, (1) 5/8" LAYER GWB ON ONE SIDE

2B **6"(HOLLOW) CMU**
6" (HOLLOW) CMU WITH 7/8" FURRING CHANNEL, (1) 5/8" LAYER WRGWB ON W/ CERAMIC TILE AND 2-1/2" FURRING CHANNEL, (1) 5/8" LAYER GWB ON OTHER SIDE (OFFICE)

3 **4" or 6" CMU**
4" or 6" CMU (SEE PLANS FOR LOCATION) WITH 7/8" FURRING CHANNEL, (1) 5/8" LAYER WRGWB ON ONE SIDE W/ CERAMIC TILE

4 **EXTERIOR WALL - 4" CMU**
REFER TO WALL SECTIONS AND DETAILS ON SHEETS A1 300.00 AND A1 431.00 FOR ADDITIONAL INFORMATION

4A **EXTERIOR WALL - 6" CMU**
REFER TO WALL SECTIONS AND DETAILS ON SHEETS A1 300.00 AND A1 431.00 FOR ADDITIONAL INFORMATION

H2M architects + engineers
538 Broad Hollow Road, 4th Floor East
Melville, NY 11747
631.756.8000 ▪ www.h2m.com

CONSULTANTS:

MARK	DATE	DESCRIPTION
2	12/22/2022	REVS. PER TOWN COMMENTS

REGISTERED ARCHITECT ROBERT BEE 032389 STATE OF NEW YORK

"ALTERATION OF THIS DOCUMENT EXCEPT BY A LICENSED PROFESSIONAL IS ILLEGAL"

DESIGNED BY:	DRAWN BY:	CHECKED BY:	REVIEWED BY:
FRM	FRM		

PROJECT No.:	DATE:	SCALE:
VGFD2001	JULY 2022	AS SHOWN

CLIENT
VAILS GATE FIRE DISTRICT

New Storage Building (Phase I)
New Fire Station (Phase II)

872 Blooming Grove Turnpike
New Windsor, NY 12553

CONTRACT
CONTRACT G
GENERAL CONSTRUCTION

STATUS
FINAL BID DOCUMENT

SHEET TITLE
ARCHITECTURE
SCHEDULES AND PARTITION TYPES
NEW STORAGE BUILDING
PHASE 1

DRAWING No.
A1 600.02

X:\VGFD (Vails Gate Fire Dept)\VGFD2001-(Vails Gate FD-New Firehouse)\02-BIM-CADD\Con-docs\arch\A1-600.00- Schedules.dwg Last Modified: Jan 13, 2023 - 1:10pm Plotted on: Jan 13, 2023 - 1:11pm By jguzman

LEGEND

SYMBOL	DESCRIPTION
	PIPING UP
	PIPING DOWN
	PIPING RISE OR DROP
	BRANCH-TOP CONNECTION
	BRANCH-BOTTOM CONNECTION
	REDUCER
CO CO	CLEANOUT
	FLOOR CLEANOUT
	CAPPED PIPE
M	METER
	FLOOR DRAIN
	AQUASTAT
	PUMP
	STRAINER
	UNION
	THERMOSTATIC MIXING VALVE
	BALANCING VALVE (BLV)
	GLOBE VALVE (GLV)
	CHECK VALVE (CV)
	GAS COCK, GAS STOP
	BALL VALVE (BV)
	BUTTERFLY VALVE (BFV)
S	SOLENOID VALVE
	PRESSURE-REDUCING VALVE (PRV)
	GATE VALVE (GV)
	PRESSURE-RELIEF VALVE (RV)
	BACKFLOW PREVENTER
	FROST FREE HOSE BIBB
	HOSE BIBB
	RECESSED-BOX HOSE BIBB OR WALL HYDRANT
	EXPANSION JOINT
	WATER HAMMER ARRESTER
	VALVE IN RISER
CO	WALL CLEANOUT (WCO)
	PITCH DOWN OR UP IN DIRECTION OF ARROW
	FLOW IN DIRECTION OF ARROW
	COLD WATER (CW)
	TEMPERED WATER (TW)
	HOT WATER (HW)
	TEMPERED WATER RETURN (TWR)
	HOT WATER RETURN (HWR)
	WASTE PIPING (W,S,OW)
	BELOW SLAB WASTE PIPING
	VENT PIPING (V)
	GAS PIPING (G)
	TO BE REMOVED
	POINT OF CONNECTION
	POINT OF DISCONNECTION

ABBREVIATIONS

AFF	ABOVE FINISHED FLOOR
BTU	BRITISH THERMAL UNIT
BTUH	BTU PER HOUR
CLG	CEILING
CO	CLEAN OUT
CODP	CLEAN OUT DECK PLATE
COWP	CLEAN OUT WALL PLATE
CW	COLD WATER
(D)	DEMOLISH
DCV	DOUBLE CHECK VALVE DEVICE
DEG. F	° FAHRENHEIT
DIA	DIAMETER
DN	DOWN
(E)	EXISTING
EA	EACH
FAI	FRESH AIR INTAKE
FD	FLOOR DRAIN
G	GAS
'GC'	GENERAL CONSTRUCTION CONTRACTOR
GPM	GALLONS PER MINUTE
GPH	GALLONS PER HOUR
'H'	HVAC CONTRACTOR
HP	HORSEPOWER
HW	HOT WATER
HWR	HOT WATER RETURN
IN.	INCHES
IN. W.C. (W.G.)	INCHES WATER COLUMN (WATER GAUGE)
KW	KILOWATTS
LBS	POUNDS
M	METER
MAX	MAXIMUM
MIN	MINIMUM
NTS	NOT TO SCALE
OD	OUTER DIAMETER
(P)	PROPOSED
'P'	PLUMBING CONTRACTOR
PD	PRESSURE DROP
RD	ROOF DRAIN
RPM	REVOLUTIONS PER MINUTE
RPZ	REDUCED PRESSURE ZONE
SAN / S	SANITARY
ST	STORM DRAIN
TEMP	TEMPERATURE
TYP	TYPICAL
TW	TEMPERED WATER (110°F)
TWR	TEMPERED WATER RETURN
V	VENT
VTR	VENT THROUGH ROOF
W	WASTE

GENERAL PLUMBING NOTES

1. PROVIDE ALL MATERIALS AND EQUIPMENT AND PERFORM ALL LABOR REQUIRED TO INSTALL COMPLETE AND OPERABLE PLUMBING SYSTEMS AS INDICATED ON THE DRAWINGS, AS SPECIFIED AND AS REQUIRED BY CODE.
2. THE CONTRACTOR, BY PRESENTING THEIR BID FOR THE WORK, REPRESENTS THAT HE/SHE HAS INSPECTED THE SITE AND IS COMPLETELY FAMILIAR WITH THE SCOPE OF WORK AND ALL FIELD CONDITIONS RELATED TO, AND AFFECTING THE WORK AND ITS PERFORMANCE. EXCEPTIONS AFFECTING THE WORK AND ITS PERFORMANCE, OR CONFLICTS BETWEEN FIELD CONDITIONS, SHALL BE BROUGHT TO THE ATTENTION OF THE ARCHITECT PRIOR TO THE SUBMISSION OF BIDS.
3. PERFORM ALL WORK IN ACCORDANCE WITH THE 2020 NEW YORK STATE PLUMBING (NYSPC), FIRE (NYSFC), MECHANICAL (NYSMC), ENERGY CONSERVATION CONSTRUCTION (NYSECC), AND FUEL GAS (NYSFGC) CODE AND THE REQUIREMENTS OF THE LOCAL AUTHORITIES HAVING JURISDICTION.
4. COMPLY WITH THE NATIONAL ELECTRIC CODE AND THE REQUIREMENTS OF DIVISION 26 FOR ALL ELECTRICAL INSTALLATIONS.
5. APPLY FOR AND SECURE ALL REQUIRED PERMITS AND INSPECTIONS AND PAY ALL COSTS FOR THE SAME.
6. FIRE STOP ALL OPENINGS IN FIRE RATED CONSTRUCTION FOR PIPING, CONDUIT, ETC.
7. DO NOT SCALE DRAWINGS. DRAWINGS FOR PLUMBING WORK ARE DIAGRAMMATIC AND ARE INTENDED TO CONVEY SCOPE AND GENERAL ARRANGEMENT ONLY. THE LOCATIONS OF ALL ITEMS SHOWN ON THE DRAWINGS OR CALLED FOR IN THE SPECIFICATIONS THAT ARE NOT DEFINITELY FIXED BY DIMENSIONS ARE APPROXIMATE.
8. COORDINATE CONTRACT DOCUMENTS PROJECT REQUIREMENTS, WORK OF OTHERS, AND EQUIPMENT AND MATERIALS PURCHASED WITH FIELD DIMENSIONS, MANUFACTURERS REQUIREMENTS FOR INSTALLATION, OPERATION, AND MAINTENANCE, CONTRACTORS INTENDED MEANS AND METHODS OF INSTALLATION AND CONTRACTORS FABRICATED ITEMS TO ENSURE A PROPER "FIT" AND INSTALLATION. BRING ANY CONFLICTS TO THE ATTENTION OF THE ARCHITECT/ENGINEER DURING THE SUBMITTAL PHASE FOR RESOLUTION PRIOR TO PURCHASING ANY EQUIPMENT.
9. MAINTAIN MAXIMUM HEADROOM AND SPACE CONDITIONS AT ALL POINTS. WHERE HEADROOM AND SPACE CONDITIONS APPEAR INADEQUATE, NOTIFY THE ARCHITECT/ENGINEER PRIOR TO PROCEEDING WITH INSTALLATION. MAINTAIN A MINIMUM OF 6'-6" CLEARANCE FROM FINISHED FLOOR TO UNDERSIDE OF PIPES, CONDUITS, SUSPENDED EQUIPMENT, ETC., THROUGHOUT ACCESS ROUTES IN MECHANICAL ROOMS.
10. FIELD VERIFY AND COORDINATE ALL PIPING DIMENSIONS BEFORE FABRICATION. MAKE MODIFICATIONS IN THE LAYOUT AS NEEDED TO PREVENT CONFLICT WITH WORK OF OTHER TRADES OR FOR PROPER EXECUTION OF THE WORK. OBTAIN THE APPROVAL OF THE ARCHITECT/ENGINEER FOR MODIFICATIONS.
11. PROVIDE PRODUCTS OF ONE MANUFACTURER WHERE TWO OR MORE ITEMS OF THE SAME TYPE OF MATERIAL OR EQUIPMENT IS REQUIRED.
12. INSTALL ALL EQUIPMENT AND APPURTENANCES IN ACCORDANCE WITH MANUFACTURER'S RECOMMENDATIONS, CONTRACT DOCUMENTS, AND APPLICABLE CODES AND REGULATIONS. REFER TO DETAILS FOR ADDITIONAL PIPING AND EQUIPMENT INSTALLATION REQUIREMENTS.
13. LOCATE ALL TEMPERATURE, PRESSURE, AND FLOW MEASURING DEVICES IN ACCESSIBLE LOCATIONS WITH STRAIGHT SECTION OF PIPE UP- AND DOWNSTREAM AS RECOMMENDED BY THE MANUFACTURER TO ENSURE MANUFACTURER CERTIFIED ACCURACY.
14. COORDINATE ALL EQUIPMENT CONNECTIONS WITH MANUFACTURER'S CERTIFIED DRAWINGS. COORDINATE AND PROVIDE ALL PIPING TRANSITIONS REQUIRED FOR FINAL CONNECTIONS TO EQUIPMENT.
15. COORDINATE LOCATIONS AND SIZES OF ALL FLOOR, WALL, AND ROOF OPENINGS WITH ALL OTHER TRADES. COORDINATE ALL PIPING AND EQUIPMENT SUPPORTED FROM STRUCTURE WITH GENERAL CONSTRUCTION WORK.
16. COMPLETE ALL PRESSURE TESTS BEFORE ANY PLUMBING EQUIPMENT, OR PIPING INSULATION IS APPLIED.
17. MAKE ALL ATTACHMENTS TO JOISTS, TRUSSES, OR JOIST GIRDERS AT PANEL POINTS. PROVIDE BEAM CLAMPS MEETING MSS STANDARDS. THE USE OF C-CLAMPS IS NOT PERMITTED.
18. PROVIDE CONCRETE PADS A MINIMUM OF 4 INCHES HIGH FOR ALL FLOOR MOUNTED EQUIPMENT. EXTEND PAD 4 INCHES BEYOND THE EQUIPMENT ON ALL SIDES.
19. INSTALL PIPING, AND CONDUIT CONCEALED IN AREAS HAVING HUNG CEILINGS AND/OR FURRED SPACES UNLESS OTHERWISE INDICATED ON THE DRAWINGS.
20. REFER TO ARCHITECTURAL DRAWINGS FOR EXACT LOCATION OF ALL ACCESSIBLE FIXTURES. MOUNT ALL SUCH FIXTURES IN ACCORDANCE WITH THE REQUIREMENTS OF THE AUTHORITY HAVING JURISDICTION.
21. PROVIDE ACCESS DOORS IN WALLS, PARTITIONS, AND CEILINGS AS REQUIRED TO MAKE VALVES, WATER HAMMER ARRESTERS, ETC. READILY ACCESSIBLE.
22. ARRANGE FOR, COORDINATE, AND MAKE CONNECTION TO ALL SERVICES PROVIDED BY OTHERS. CONFORM TO ALL REQUIREMENTS APPLICABLE TO CONNECTIONS IMPOSED BY UTILITY COMPANIES AND AUTHORITIES HAVING JURISDICTION.
23. INSTALL FIXTURES AND EQUIPMENT WITH VALVES, UNIONS, ETC. TO ALLOW FOR EASE OF SERVICE AND/OR REMOVAL.
24. CORE DRILL ALL PENETRATIONS THROUGH CONCRETE FLOORS, WALLS, AND FOOTINGS.
25. INSTALL LINK SEAL TYPE PROTECTION FOR WATER RESISTANT SEALS AT ALL SLAB AND BELOW GROUND WALL FOOTING PENETRATIONS.
26. PROVIDE A CLEANOUT AT THE BASE OF WASTE AND VENT STACKS WITH FINISHED WALL PLATE IN FINISHED WALLS.
27. FURNISH AND INSTALL WATER PRESSURE REDUCING VALVE AND PRESSURE RELIEF VALVE IN ACCORDANCE WITH THE NEW YORK STATE PLUMBING CODE ON ALL INCOMING DOMESTIC WATER SYSTEMS IN EXCESS OF 80 P.S.I.G.
28. COVER ALL COPPER PIPING BELOW SLAB WITH "ARMAFLEX" TYPE INSULATION.
29. SLOPE ALL VENT PIPING TO DRAIN BACK TO THE DRAINAGE SYSTEM.
30. FLUSH AND DISINFECT ALL DOMESTIC POTABLE WATER PIPING AND TEST THE WATER IN ACCORDANCE WITH THE INTERNATIONAL PLUMBING CODE. PROVIDE CERTIFICATE OF PERFORMANCE AND LABORATORY TEST REPORT TO LOCAL AUTHORITIES HAVING JURISDICTION AND OBTAIN THEIR APPROVAL.
31. PROVIDE WATER HAMMER ARRESTORS AT ALL QUICK CLOSING FIXTURE VALVE LOCATIONS.
32. ALL PIPING, VALVES AND FITTINGS USED FOR POTABLE WATER SHALL BE NSF 61/372 COMPLIANT AND BE TESTED FOR LOW LEAD.
33. ANY PENETRATIONS THROUGH AIR BARRIER SHALL BE SEALED AS PER 2020 NYSECC RESIDENTIAL AND COMMERCIAL PROVISIONS.
34. ALL PIPING IN PLENUM SPACES SHALL BE CAST IRON FOR SANITARY, STORM, VENT SYSTEMS, AND COPPER PIPING FOR DOMESTIC SYSTEMS, AND STEEL PIPING FOR GAS SYSTEMS. NO PLASTIC PIPING ALLOWED.
35. IN THE EVENT THAT THERE IS A DISCREPANCY BETWEEN DESIGN PLANS, RISER DIAGRAMS, AND/OR SPECIFICATIONS CONCERNING PIPE SIZES, FIXTURES, AND/OR EQUIPMENT, THE MOST STRINGENT REQUIREMENTS SHALL BE APPLIED TO THE PROJECT.

APPLICABLE CODES

- 2020 NEW YORK STATE RESIDENTIAL CODE (NYSRC) 1ST PRINTING (INCLUDES PLUMBING, MECHANICAL, FUEL GAS, AND ENERGY CONSERVATION)
- 2020 NEW YORK STATE BUILDING CODE (NYSBC) 1ST PRINTING
- 2020 NEW YORK STATE FIRE CODE (NYSFC) 1ST PRINTING
- 2020 NEW YORK STATE PLUMBING CODE (NYSPC) 1ST PRINTING
- 2020 NEW YORK STATE FUEL GAS CODE (NYSFGC) 1ST PRINTING
- 2020 NEW YORK STATE MECHANICAL CODE (NYSMC) 1ST PRINTING
- 2020 NEW YORK STATE ENERGY CONSERVATION CODE (NYSECC) 1ST PRINTING

ENERGY NOTES

2020 NEW YORK STATE ENERGY CONSERVATION CODE NOTES: STATEMENT OF COMPLIANCE:

TO THE BEST OF MY KNOWLEDGE, AND PERSONAL JUDGEMENT, THESE PLANS AND SPECIFICATIONS ARE IN COMPLIANCE WITH THE 2020 NEW YORK STATE ENERGY CONSERVATION CODE (NYSECC).

1. SERVICE WATER HEATING EQUIPMENT PERFORMANCE EFFICIENCY:
   - 1.1. WATER HEATING EQUIPMENT AND HOT WATER STORAGE TANKS SHALL MEET THE REQUIREMENTS OF TABLE C404.2 IN THE 2020 NYSECC. (NYSECC C404.2)
   - 1.2. SERVICE WATER HEATING SHALL BE COMMISSIONED AND COMPLETED IN ACCORDANCE WITH SECTION C408.2 OF THE 2020 NYSECC.
2. TEMPERATURE CONTROL:
   - 2.1. SERVICE WATER HEATING EQUIPMENT SHALL BE PROVIDED WITH CONTROLS ALLOWING A SETPOINT OF 110°F FOR DWELLING UNITS AND 90 °F FOR OTHER OCCUPANCIES. PUBLIC REST ROOM LAVATORIES SHALL HAVE A MAXIMUM OUTLET TEMPERATURE OF 110°F.
   - 2.2. WHERE WATER HEATING EQUIPMENT SERVING NONCIRCULATING SYSTEMS IS NOT SUPPLIED WITH INTEGRAL HEAT TRAPS, HEAT TRAPS SHALL BE PROVIDED ON THE SUPPLY AND DISCHARGE PIPING. (NYSECC C404.3)
3. PIPE INSULATION:
   - 3.1. AUTOMATIC CIRCULATING HOT WATER SYSTEM PIPING SHALL BE INSULATED WITH 1 INCH OF INSULATION WITH A CONDUCTIVITY NOT EXCEEDING 0.27 BTU PER INCH/H X FT X FT X °F, OR THE INSULATION REQUIREMENTS OF SPECIFICATIONS, WHICHEVER IS GREATER. THE FIRST 8 FT OF PIPING IN NONCIRCULATING SYSTEMS WITH EQUIPMENT WITHOUT INTEGRAL HEAT TRAPS SHALL BE INSULATED WITH 0.5 INCH OF MATERIAL HAVING A CONDUCTIVITY NOT EXCEEDING 0.27 BTU PER INCH/H X FT X FT X °F, OR THE INSULATION REQUIREMENTS OF SPECIFICATIONS, WHICHEVER IS GREATER. (NYSECC C404.5)
   - 3.2. ALL PIPING TO BE INSULATED WITH 0.21-0.28 CONDUCTIVITY
   - 3.3. COLD WATER PIPING - ALL SIZES - 1-INCH INSULATION, A.S. JACKET.
   - 3.4. STORM DRAINAGE PIPING ALL HORIZONTAL RUNS AND DRAIN BODY - MINIMUM 1-INCH INSULATION, A.S. JACKET.
   - 3.5. HOT WATER PIPING (140°F) AND TEMPERED WATER PIPING (110°F)
     - 3.5.1. PIPE SIZE: < 1" INSULATION: 1"
     - 3.5.2. PIPE SIZE: 1" TO < 1-1/2" INSULATION: 1"
     - 3.5.3. PIPE SIZE: 1-1/2 TO < 4" INSULATION: 1.5"
     - 3.5.4. PIPE SIZE: 4" TO < 8" INSULATION: 1.5"
4. HOT WATER SYSTEM CONTROLS:
   - 4.1. CIRCULATING HOT WATER SYSTEM PUMPS OR HEAT TRACE SHALL BE ARRANGED TO BE TURNED OFF EITHER AUTOMATICALLY OR MANUALLY WHEN THERE IS LIMITED HOT WATER DEMAND. READY ACCESS SHALL BE PROVIDED TO THE OPERATING CONTROLS. (NYSECC C404.6)
5. PIPE VOLUME AND MAXIMUM LENGTHS
   - 5.1. PER SECTION OF C404.5.1 OF THE 2020 NYSECC, ALL MAXIMUM PIPE LENGTHS FROM FIXTURES SHALL COMPLY WITH THE MAXIMUM PIPE LENGTHS ON THE CHART BELOW. CONTRACTOR TO ENSURE HOT WATER RETURN PIPING IS INSTALLED AS PER PLANS AND THAT THESE LENGTHS ARE MAINTAINED.

NOMINAL PIPE SIZE (INCHES)	VOLUME (LIQUID OUNCES PER FOOT LENGTH)	MAXIMUM PIPING LENGTH (FEET)	
		PUBLIC LAVATORY FAUCETS	OTHER FIXTURES AND APPLIANCES
1/4"	0.33	6	50
5/16"	0.5	4	50
3/8"	0.75	3	50
1/2"	1.5	2	43
5/8"	2	1	32
3/4"	3	0.5	21
7/8"	4	0.5	16
1"	5	0.5	13
1-1/4"	8	0.5	8
1-1/2"	11	0.5	6
2" OR LARGER	18	0.5	4

FUEL GAS NOTES

1. PERFORM ALL WORK IN ACCORDANCE WITH NFPA 54 - NATIONAL FUEL GAS CODE, THE 2020 NEW YORK STATE FUEL GAS CODE (NYSFGC), 2015 NATIONAL GRID BLUE BOOK, 2018 CONEDISON YELLOW BOOK, 2017 PSEG NJ BOOK, AND THE REQUIREMENTS OF THE LOCAL AUTHORITIES HAVING JURISDICTION.
2. THE DEPTH OF COVER FOR ALL GAS SERVICE PIPING SHALL BE 24 INCHES.
3. THE WATER SERVICE SHALL BE KEPT A MINIMUM OF 10-FEET FROM THE INCOMING GAS SERVICE MEASURED IN ANY DIRECTION.
4. IF ELECTRIC AND GAS SHARE A COMMON TRENCH, THE TRENCH MUST BE WIDE ENOUGH TO MAINTAIN A 6-INCH MINIMUM SEPARATION DISTANCE.
5. LOCATION OF PROPOSED GAS METER ON CONTRACT DOCUMENTS ARE SUBJECT TO CHANGE BY THE LOCAL UTILITY COMPANY.
6. REFER TO THE LOCAL UTILITY COMPANY HANDBOOKS FOR METER RIG CONSTRUCTION DETAILS, RULES AND REGULATIONS. THIS INCLUDES, BUT NOT LIMITED TO LOCATION OF STEP DOWN REGULATORS, METER SIZE AND SET LENGTHS, VENTING OF REGULATORS, BYPASS PIPING, BOLLARD REQUIREMENTS, CONCRETE PAD, SUPPORTS, AND SHUT OFF VALVES.
7. GAS PIPING:
   - 7.1. INDOOR - STEEL PIPE- SCHEDULE 40 WITH WELDED OR THREADED JOINTS. THREADED JOINTS SHALL BE 150 POUND MALLEABLE IRON, FORGED STEEL, BLACK IRON, OR GALVANIZED STEEL.
   - 7.2. OUTDOOR - ABOVE GROUND - GALVANIZED PIPE OR PROPERLY COATED BLACK STEEL PIPE WITH SCREWED OR THREADED JOINTS.
   - 7.3. BELOW GRADE - STEEL PIPE- MILL WRAPPED SCHEDULE 40 WITH WELDED OR THREADED JOINTS
   - 7.4. WELDED JOINTS MUST BE USED FOR GAS PIPING LARGER THAN 4-INCH, OR 3-INCH FOR SCHOOLS.
8. GAS PIPING ENTERING A BUILDING SHALL BE ABOVE GRADE. PENETRATIONS THROUGH BURIED WALLS ARE NOT PERMITTED.
9. WHERE GAS PIPING IS INSTALLED BELOW GRADE INSIDE A BUILDING, THE GAS PIPING MUST BE INSTALLED IN A CONDUIT AND BE VENTED TO THE EXTERIOR.
10. GAS PRESSURE TEST:
    - 10.1. GALVANIZED OR BARE STEEL - UP TO 14" W.C. - AIR AT 3 PSIG FOR 30 MINUTES - AIR AT 15 PSIG FOR 1-HOUR (SED)
    - 10.2. GALVANIZED OR BARE STEEL - GREATER THAN 14" W.C. - AIR AT 50 PSIG FOR 30 MINUTES - AIR AT 1.5 TIMES THE WORKING PRESSURE FOR 1-HOUR (SED)
    - 10.3. COATED OR WRAPPED - LESS THAN 2-INCH - AIR AT 90 PSIG FOR 1-HOUR - ALL SIZES - AIR AT 100 PSIG FOR 1-HOUR (SED)
    - 10.3. COATED OR WRAPPED - 2-INCH TO 12-INCH - AIR AT 90 PSIG FOR 4-HOURS
11. SUPPLY ALL GAS-FIRED EQUIPMENT WITH GAS PIPING AS PER THE NEW YORK STATE FUEL GAS CODE. PROVIDE EACH PIECE OF EQUIPMENT WITH A DIRT LEG, UNION AND GAS COCK. PROVIDE A VENTED REGULATOR IF EQUIPMENT REQUIRES LOWER THAN LINE GAS PRESSURE.
12. PROVIDE VEHICLE IMPACT PROTECTION FOR NEW METER HEADER. BOLLARDS SHALL BE SPACED NO MORE THAN 4-FEET BETWEEN POSTS ON CENTER AND LOCATED NOT LESS THAN 3-FEET FROM THE PROTECTED OBJECT.
13. SHUTOFF VALVES INSTALLED IN TUBING SYSTEMS MUST BE RIGIDLY AND SECURELY SUPPORTED INDEPENDENTLY OF THE TUBING.
14. ALL COOKING APPLIANCE CONNECTIONS MUST BE LISTED AND LABELED.

MANUAL GAS VALVE STANDARDS

VALVE STANDARDS	APPLIANCE SHUTOFF VALVE APPLICATION UP TO 1/2 PSIG PRESSURE	OTHER VALVE APPLICATIONS		
		UP TO 1/2 PSIG PRESSURE	UP TO 2 PSIG PRESSURE	UP TO 5 PSIG PRESSURE
ANSI Z21.15/CGA9.1	X	–	–	–
ASME B16.44	X	X*	X**	–
ASME B16.33	X	X	X	X

NOTES:
1. FOR SI: 1 POUND PER SQUARE INCH GAUGE = 6.895 kPa.
2. X* IF LABELED 2G
3. X** IF LABELED 5G

H2M architects + engineers

538 Broad Hollow Road, 4th Floor East
Melville, NY 11747
631.756.8000 • www.h2m.com

CONSULTANTS:

MARK	DATE	DESCRIPTION

STATE OF NEW YORK · JONATHAN RICHARD MURPHY · 096440-1 · LICENSED PROFESSIONAL ENGINEER

"ALTERATION OF THIS DOCUMENT EXCEPT BY A LICENSED PROFESSIONAL IS ILLEGAL"

DESIGNED BY:	DRAWN BY:	CHECKED BY:	REVIEWED BY:
JRM	KJE		

PROJECT No.:	DATE:	SCALE:
VGFD2001	JULY 2022	AS SHOWN

CLIENT

VAILS GATE FIRE DISTRICT

New Storage Building (Phase I)
New Fire Station (Phase II)

872 Blooming Grove Turnpike
New Windsor, NY 12553

CONTRACT

CONTRACT G
GENERAL CONSTRUCTION

STATUS

FINAL BID DOCUMENT

SHEET TITLE

PLUMBING GENERAL NOTES AND LEGENDS

DRAWING No.

P1 001.00

C:\Users\kescarman\appdata\local\temp\AcPublish_15036\P 001.00 - PLUMBING GENERAL NOTES AND LEGENDS.dwg Last Modified: Jul 18, 2022 - 8:50am Plotted on: Jul 18, 2022 - 8:57am By kescarman

PLUMBING FIXTURE SCHEDULE

FIXTURE TAG	DESCRIPTION	MANUFACTURER	MODEL	TRIM				MINIMUM CONNECTION SIZES (IN)							SPECIFICATION	REMARKS
				MANUFACTURER	MODEL	TYPE	MOTION SENSOR CONTROL	COLD WATER		HOT WATER		DRAIN		VENT		
								SIZE	FU	SIZE	FU	SIZE	DFU			
LAV-1	LAVATORY - WALL MOUNTED - BARRIER FREE - ADA	AMERICAN STANDARD	WHEELCHAIR USERS LAVATORY	KOHLER	K-13462	ELECTRONIC	YES	1/2	1.5	1/2	1.5	1-1/2	1	1-1/2	VITREOUS CHINA, 20" X 27" WALL MOUNT SINK W/ 14" WIDE, 14-3/4" FRONT TO BACK, 4-3/4" DEEP BOWL, FRONT OVERFLOW, CONCEALED ARMS SUPPORT, FAUCET LEDGE. FAUCET CENTER HOLE ONLY. ASME A112.19.2 CERTIFIED.	PROVIDE ZURN Z1231 CONCEALED ARM WALL-MOUNTED LAVATORY SUPPORT SYSTEM.
WC-1	WATER CLOSET - FLUSH VALVE - WALL MOUNTED - BARRIER FREE - ADA	AMERICAN STANDARD	AFWALL MILLENIUM FLOWISE TOILET SYSTEM	AMERICAN STANDARD	SELECTRONIC FLUSH VALVE	ELECTRONIC	YES	1	10	-	-	4	4	2	VITREOUS CHINA, 26" X 14" X 15" WALL-MOUNTED FLUSHOMETER VALVE TOILET, CONVENTIONAL GLAZE, SENSOR OPERATED 1.28/1.1 GPF DUAL FLUSH, 1-1/2" TOP SPUD. ASME A112.19.2 CERTIFIED.	PROVIDE ZURN Z1202-N4 NO-HUB WATER CLOSET CARRIER SYSTEM FOR SINGLE WATER CLOSETS.
SK-1	SERVICE SINK	ADVANCE TABCO	FS-WM-1-ADA-F	AMERICAN STANDARD	8350.235	MANUAL	NO	1/2	2.25	1/2	2.25	3	2	1-1/2	14 GAUGE TYPE "304" STAINLESS STEEL, 1-5/8" TUBULAR "304" STAINLESS STEEL WALL BRACKETS, STAINLESS STEEL GUSSETS. 8" O.C. FAUCET HOLES PUNCHED. ALL TIG WELDED, WELDED AREAS BLENDED TO MATCH ADJACENT SURFACES AND TO A SATIN FINISH. DIE FORMED TUBULAR WALL BRACKETS. 8-1/2" HIGH BACKSPLASH, 5" SINK BOWL DEPTH. NSF 61 STANDARD 9 COMPLIANT.	
HB-1	INTERIOR HOSE BIBB WITH KEY	MURDOCK	8121CP-LF	-	-	MANUAL	-	3/4	-	-	-	-	-	-	HEAVY BRASS BODY, FURNISHED WITH A LOCK SHIELD BONNET AND REMOVABLE LOOSE KEY HANDLE. VACUUM BREAKERS ARE ATMOSPHERIC TYPE AND CONFORM TO THE REQUIREMENTS OF ASSE STANDARD 1011.	
FD-1	FLOOR DRAIN - SEE NOTE 3	ZURN	Z415SL	-	-	-	-	-	-	-	-	3	2	2	FLOOR AND SHOWER DRAIN, DURA-COATED CAST IRON BODY WITH BOTTOM OUTLET, COMBINATION INVERTIBLE MEMBRANE CLAMP AND ADJUSTABLE COLLAR WITH SEEPAGE SLOTS AND "TYPE SL" POLISHED, NICKEL BRONZE SQUARE, WIDE FLANGED, LIGHT DUTY STRAINER.	
CB-1	CATCH BASIN	ZURN	Z887-24-HD	-	-	-	-	-	-	-	-	4	-	-	CATCH BASIN SHALL BE 23-1/4" WIDE REVEAL X 24-5/8" LONG AND 24" DEEP. CATCH BASIN SHALL BE MADE OF 0% WATER ABSORBENT HDPE. SHALL MECHANICALLY LOCK INTO THE CONCRETE SURROUND. BASIN SHALL WEIGH LESS THAN 20.0 LBS. CATCH BASIN SHALL HAVE REBAR CLIPS STANDARD TO SECURE BASIN IN ITS FINAL LOCATION. SHALL BE PROVIDED WITH STANDARD DGC GRATES THAT LOCK DOWN TO FRAME. ZURN 22-1/4" WIDE REVEAL DUCTILE IRON SLOTTED GRATE CONFORMING TO ASTM SPECIFICATION A536-84, GRADE 80-55-06. DUCTILE IRON GRATE IS RATED CLASS C PER THE DIN EN 1433 TOP LOAD CLASSIFICATION. SUPPLIED IN 24" NOMINAL LENGTH WITH 11/16 WIDE SLOTS, AND 2-1/2" BEARING DEPTH. GRATE HAS AN OPEN AREA OF 164.00 SQ IN. PER FT. THE 1/4" THICK HEAVY DUTY FRAME ASSEMBLY CONFORMS TO EITHER ASTM SPECIFICATION A36 OR A536-84, WITH 4-4 LONG CONRETE ANCHORS PER BASIN. THE FRAME IS SUPPLIED WITH A PODER COATED FINISH. ALL WELDS MUST BE PERFORMED BY A CERTIFIED WELDER PER ASTM STANDARD AWS D1.1. FRAMES SHALL BE PRODUCED IN USA.	
EW-1	EMERGENCY EYEWASH STATION	HAWS	7360B-7460B	-	-	-	-	1/2	-	1/2	-	-	-	-	WALL MOUNTED EYE/FACE WASH SHALL INCLUDE A STAINLESS STEEL 11" ROUND BOWL, AN AXION MSR EYE/FACE WASH HEAD SUPPLIED BY AN INTEGRAL FLOW CONTROL, CHROME-PLATED BRASS STAY-OPEN BALL VALVE EQUIPPED WITH STAINLESS STEEL BALL AND STEM, AND CHROME-PLATED BRASS IN-LINE 50 X 50 MESH WATER STRAINER. UNIT SHALL ALSO INCLUDE CAST-ALUMINUM CHROMATE PROTECTED WALL BRACKET, YELLOW PLASTIC POP-OFF DUST COVER FOR EYEWASH HEAD, TAILPIECE, UNIVERSAL SIGN, 1/2" IPS INLET AND 1-1/2" IPS WASTE.	PROVIDE THERMOSTATIC MIXING VALVE HAWS MODEL 9201EFE. OUTLET TEMPERATURE SHALL BE SET TO 80 DEGREES F.

NOTES:

1. CHROME PLATE ALL DRAIN PIPE, FITTINGS, P-TRAPS AND SUPPLY LINES THAT ARE EXPOSED, LOCATED WITHIN VANITIES OR ACCESSIBLE CABINETS OR BEHIND WATER CLOSETS
2. MINIMUM CONNECTION SIZES INDICATED ARE EQUIPMENT CONNECTION SIZES OR CODE MINIMUM SIZES, SEE PLANS AND DIAGRAMS FOR ACTUAL SIZES REQUIRED
3. ALL FLOOR DRAINS SHALL HAVE TRAP SEALS. MANUFACTURER: ZURN; Z1072
4. INSULATE EXPOSED DRAIN AND SUPPLY PIPING FOR HANDICAPPED FIXTURES WITH TRUEBRO LAV GUARD.

WATER HEATER [ELECTRIC]

EQUIPMENT NO.	LOCATION	SYSTEM SERVED	ELECTRIC POWER	RECOVERY GPH AT 100 DEG RISE	WATER CONNECTION	EQUIPMENT SPECIFICATIONS						MINIMUM PERFORMANCE OF WATER HEATING (NYSECC TABLE C404.2)					SPECIFICATIONS
						MNF	MODEL NO.	NOMINAL DIMENSION DIA x H	CAPACITY (GAL)	NOMINAL OPERATING WEIGHT (LBS.)	VOLTS / PHASE	EQUIPMENT TYPE	SIZE CATEGORY	SUBCATEGORY	PERFORMANCE REQUIRED 0.97-0.00132V EFFICIENCY	WATER HEATER EFFICIENCY	
WH-1	MEZZANINE	BUILDING	3,000 W	12 GAL.	3/4"	A.O. SMITH	DEL-6	14.25" X 15.5"	6	85	208/1	WATER HEATER, ELECTRIC	< 12 KW	RESISTANCE	-	-	HEATER SHALL HAVE 150 PSI WORKING PRESSURE AND BE EQUIPPED WITH EXTRUDED HIGH DENSITY ANODE ROD. EACH ELEMENT SHALL BE CONTROLLED BY AN INDIVIDUALLY MOUNTED THERMOSTAT AND HIGH TEMPERATURE CUTOFF SWITCH. THE OUTER JACKET SHALL BE OF BAKED ENAMEL FINISH AND SHALL BE PROVIDED WITH FULL SIZE CONTROL COMPARTMENT FOR PERFORMANCE OF SERVICE AND MAINTENANCE THROUGH FRONT PANELS AND SHALL ENCLOSE THE TANK WITH FOAM INSULATION. THE DRAIN VALVE SHALL BE LOCATED IN THE FRONT FOR EASE OF SERVICING. HEATER TANK SHALL SHALL A THREE YEAR LIMITED WARRANTY AS OUTLINED IN THE WRITTEN WARRANTY. FULLY ILLUSTRATED INSTRUCTION MANUAL TO BE INCLUDED.

EXPANSION TANK SCHEDULE

EQUIPMENT NO.	LOCATION	SYSTEM SERVED	PERFORMANCE/CONSTRUCTION REQUIREMENTS			EQUIPMENT SPECIFICATIONS					SPECIFICATION	REMARKS
			ESTIMATED VOLUME (GAL.)	MAX. OPERATING PRESS. RANGE (PSIG)	MAX. OPERATING TEMP. RANGE (DEG. F)	MNF	MODEL NO.	DIMENSION DIA. x H	WATER CONNECTION	OPERATING WEIGHT (LBS.)		
ET-1	MEZZANINE	HOT WATER HEATING	2.0	150	200	AMTROL	ST-5	8" X 13"	3/4"	7	THERMAL EXPANSION TANK WITH STEEL SHELL AND HEAVY DUTY BUTYL DIAPHRAGM. TANK SHALL INCLUDE ANTIMICROBIAL POLYPROPYLENE LINER, STAINLESS STEEL SYSTEM CONNECTION, URETHENE TOPCOAT FINISH. WATER CIRCULATOR, AND PROJECTION WELDED AIR VALVE. EXPANSION TANK TO BE NSF/ANSI 61 CERTIFIED.	CONTRACTOR TO SET PRESSURE OF EXPANSION TANK TO MATCH WATER SUPPLY PRESSURE PRIOR TO INSTALLATION. EXPANSION TANK TO BE MOUNTED VERTICALLY.

MIXING VALVE

EQUIPMENT NO.	LOCATION	BASIS OF DESIGN INFORMATION					
		MAXIMUM PRESSURE RANGE	MINIMUM FLOW	MAXIMUM FLOW	MANUFACTUER	MODEL	NOMINAL DIMENSIONS (W X H)
MV-1	LAVATORY	125 PSI	0.25 GPM	12 GPM	LEONARD	270-LF	5" X 5.5"
MV-2	EMERGENCY EYEWASH STATION	125 PSI	1 GPM	12 GPM	HAWS	9201EFE	4-1/2" X 5-1/4"

INTERCEPTOR SCHEDULE

EQUIPMENT NO.	LOCATION	BASIS OF DESIGN INFORMATION						SPECIFICATION	REMARKS
		FLUID	FLOW (GPM)	INLET AND OUTLET SIZE	MANUFACTUER	MODEL	NOMINAL DIMENSIONS (L X W X H)		
SI-1	OPEN FLOOR	SAND	50	4"	ZURN	Z1187-SI-E	48" X 24" X 26"	ACID RESISTANT COATED INTERIOR STEEL SAND INTERCEPTOR WITH IRON GRATE COVER, INTEGRAL EXTENSION, 4" NO HUB INLET/OUTLET.	INTERCEPTOR TO BE INSTALLED FLUSH WITH F.F. PROVIDE NO-HUB INLET/OUTLETS. PROVIDE EXTRA-HEAVY-DUTY REINFORCED COVER FOR VEHICULAR TRAFFIC.

H2M architects + engineers

538 Broad Hollow Road, 4th Floor East
Melville, NY 11747
631.756.8000 • www.h2m.com

CONSULTANTS:

MARK	DATE	DESCRIPTION

STATE OF NEW YORK · JONATHAN RICHARD MUNSON · 096440-1 · LICENSED PROFESSIONAL ENGINEER

"ALTERATION OF THIS DOCUMENT EXCEPT BY A LICENSED PROFESSIONAL IS ILLEGAL"

DESIGNED BY:	DRAWN BY:	CHECKED BY:	REVIEWED BY:
JRM	KJE		

PROJECT No.:	DATE:	SCALE:
VGFD2001	JULY 2022	AS SHOWN

CLIENT

VAILS GATE FIRE DISTRICT

New Storage Building (Phase I)
New Fire Station (Phase II)

872 Blooming Grove Turnpike
New Windsor, NY 12553

CONTRACT

CONTRACT G
GENERAL CONSTRUCTION

STATUS

FINAL BID DOCUMENT

SHEET TITLE

PLUMBING SCHEDULES

DRAWING No.

P1 002.00

X:\VGFD 2\Vails Gate Fire Dept\VGFD2001-Vails Gate FD\New Firehouse\02-BIM-CADD\Cnx-docs\dwgs\Storage Building\P 002.00 - PLUMBING SCHEDULES.dwg Last Modified: Jul 08, 2022 - 8:04am Plotted on: Jul 18, 2022 - 8:31am By kescarpman

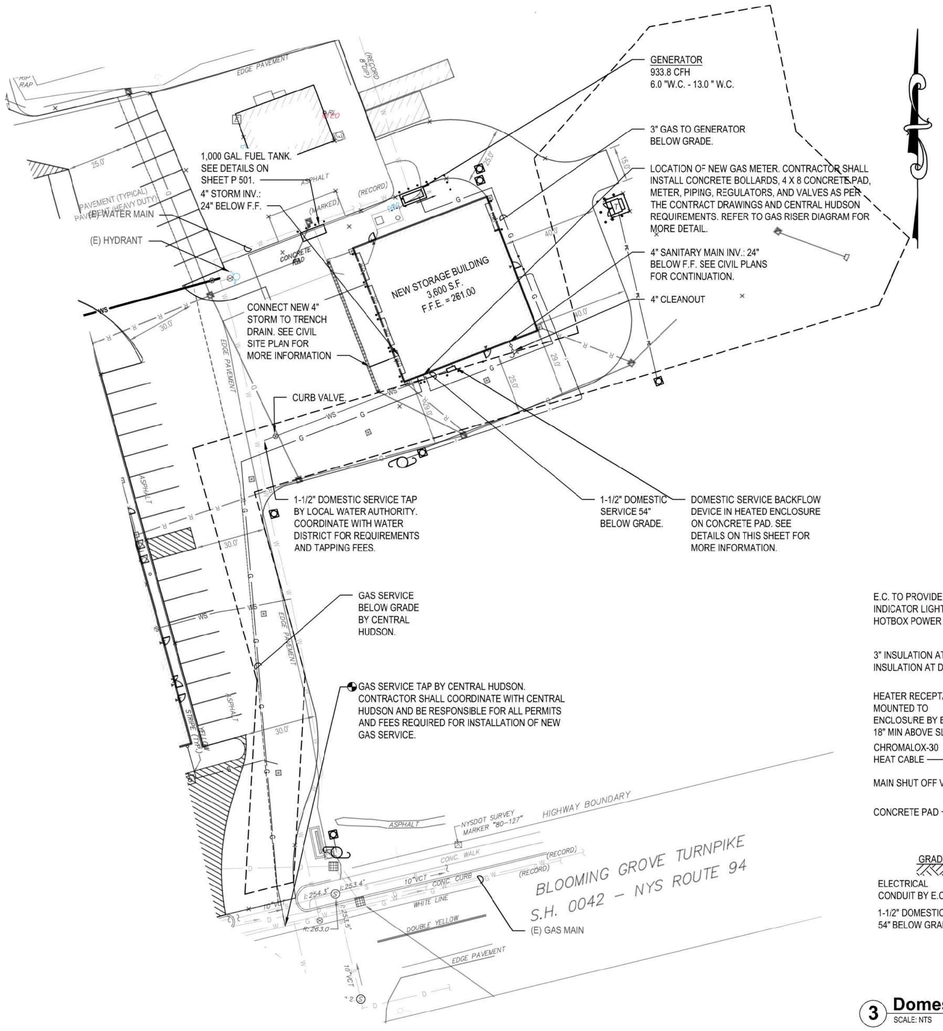

1 Plumbing Site Plan
SCALE: 1" = 30'-0"

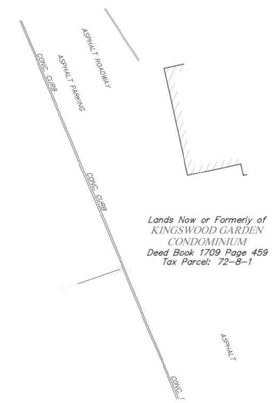

DOMESTIC WATER BACKFLOW PREVENTION DEVICE GENERAL NOTES:

1. INSTALLATION SHALL BE IN ACCORDANCE WITH ALL APPLICABLE COUNTY DEPARTMENT OF HEALTH SERVICES, NEW YORK STATE HEALTH DEPARTMENT REGULATIONS, AND TOWN OF NEW WINDSOR REGULATIONS.
2. ALL CONNECTIONS ON THE WATER SERVICE SHALL BE DOWNSTREAM FROM THE BACKFLOW PREVENTION DEVICE. BYPASSING OF A BACKFLOW PREVENTION DEVICE IS A VIOLATION OF NEW YORK STATE HEALTH DEPARTMENT RULES AND REGULATIONS.
3. THE CONTRACTOR SHALL ENGAGE A CERTIFIED BACKFLOW PREVENTION DEVICE TESTER TO TEST THE BACKFLOW PREVENTION DEVICE AFTER INSTALLATION. IT IS THE OWNER'S RESPONSIBILITY TO HAVE EACH DEVICE CERTIFIED AT LEAST ANNUALLY WITH RESULTS REPORTED TO THE AUTHORITY HAVING JURISDICTION AND TO THE COUNTY DEPARTMENT OF HEALTH ON NY STATE FORM GEN 215. CONTRACTOR SHALL BE RESPONSIBLE FOR ALL RELATED TESTING AND APPLICATION FEES.
4. SHUT-OFF VALVES ON DOMESTIC WATER SERVICE BFP DEVICE SHALL BE BALL VALVES AND SHALL BE SAME MANUFACTURER AS BFP DEVICE.
5. TEST COCKS ON THE BFP DEVICE SHALL BE POSITIONED TO FACILITATE TESTING WITH 30" MINIMUM CLEARANCE.
6. BACKFLOW DEVICES MAY NOT BE MODIFIED IN ANY WAY DURING INSTALLATION.
7. DOMESTIC WATER SERVICE TO BE COPPER TYPE K AND SHALL HAVE A MINIMUM OF 4'-6" OF COVER.
8. PIPING SHALL BE UN-BRANCHED AND UNRESTRICTED FROM THE SUPPLY MAIN TO THE DEVICE, EXCEPT FOR THE METER ON THE DOMESTIC SERVICE.
9. CONTRACTOR SHALL PROVIDE APPROPRIATE FLOOR/WALL SUPPORTS FOR ALL DEVICES AND PIPING. ALL SUPPORTS/HANGERS/CLAMPS SHALL BE GALVANIZED STEEL.
10. BACKFLOW DEVICES SHALL BE APPROVED BY THE UNIVERSITY OF SOUTHERN CALIFORNIA FOUNDATION FOR CROSS CONNECTION CONTROL AND HYDRAULIC RESEARCH.
11. THE ROOM AND ENCLOSURE WHERE THE DEVICES ARE LOCATED SHALL BE HEATED AND SHALL HAVE LIGHTING.
12. DEVICE MAY NOT BE INSTALLED HIGHER THAN 5'-0" ABOVE THE FLOOR OR A FIXED PLATFORM IS REQUIRED.
13. WATER SERVICE LINES TO MAINTAIN A MINIMUM CLEARANCE OF 10'-0" FROM GAS SERVICE, SEWER LINES, DRAINAGE LINES, UTILITY POLES AND TREES, ETC.

SERVICE FEE NOTE:

CONTRACTOR SHALL BE RESPONSIBLE FOR ALL ASSOCIATED TAP, PERMIT AND METER FEES FOR WATER AND GAS SERVICES. CONTRACTOR SHALL PROVIDE A 15,000 DOLLAR ALLOWANCE TO COVER ALL FEES ASSOCIATED WITH CONNECTING NEW WATER AND GAS SERVICES TO EXISTING MAINS, AND INSTALLATION AND FURNISHING OF UTILITY METERS AND METER RIGS.

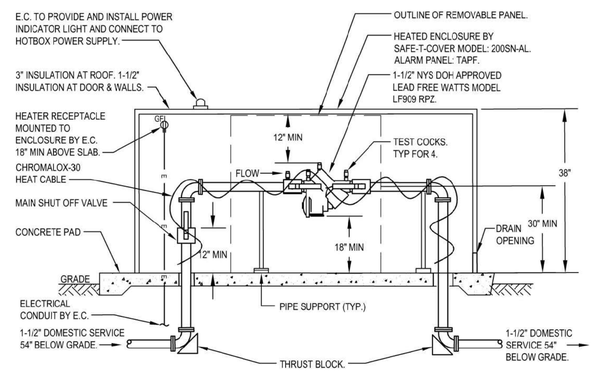

Domestic Section View

3 Domestic Service BFP Device Section View Detail
SCALE: NTS

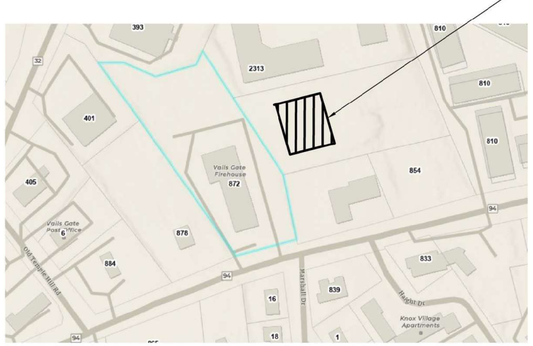

2 Site Map
SCALE: NTS

ORANGE COUNTY TAX NUMBER
SECTION: 65 BLOCK: 2 LOT(S): 28

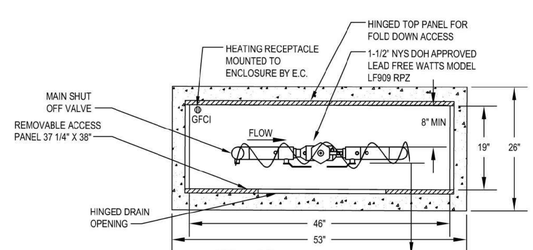

Plan View

NOTES:
1. ALL DIMENSIONS ARE IN INCHES.
2. RECOMMENDED SLAB SIZE: 53"Lx26"Wx5" THICKNESS (3,500 PSI W/ REINFORCING).
3. "E" INDICATES ELECTRICAL GFI RECEPTACLE. IT SHALL BE MOUNTED A MINIMUM OF 18" ABOVE THE SLAB. CONTRACT 'E' TO PROVIDE ALL POWER WIRING TO RECEPTACLE AND HEATERS.
4. THE ENCLOSURE SHALL USE (1) CHROMALOX-30, 90W, 120V, SINGLE PHASE HEATER.

4 Domestic Service BFP Device Plan View Detail
SCALE: NTS

H2M architects + engineers
538 Broad Hollow Road, 4th Floor East
Melville, NY 11747
631.756.8000 • www.h2m.com

CONSULTANTS:

MARK	DATE	DESCRIPTION

STATE OF NEW YORK · JONATHAN RICHARD MILLER · 096440-1 · LICENSED PROFESSIONAL ENGINEER

"ALTERATION OF THIS DOCUMENT EXCEPT BY A LICENSED PROFESSIONAL IS ILLEGAL"

DESIGNED BY:	DRAWN BY:	CHECKED BY:	REVIEWED BY:
JRM	KJE		
PROJECT No.: VGFD2001	DATE: JULY 2022	SCALE: AS SHOWN	

CLIENT
VAILS GATE FIRE DISTRICT

New Storage Building (Phase I)
New Fire Station (Phase II)

872 Blooming Grove Turnpike
New Windsor, NY 12553

CONTRACT
CONTRACT G
GENERAL CONSTRUCTION

STATUS
FINAL BID DOCUMENT

SHEET TITLE
PLUMBING SITE PLAN - NEW STORAGE BUILDING

DRAWING No.
PS1 100.00

X:\VGFD (Vails Gate Fire Dist)\VGFD2001 (Vails Gate FD-New Firehouse)\02-BIM-CADD\Cov-dwg's\plumb\Storage Building\PS 100.00 - PLUMBING SITE PLAN.dwg Last Modified: Jul 08, 2022 - 10:11am Plotted on: Jul 18, 2022 - 8:49am By kescamman

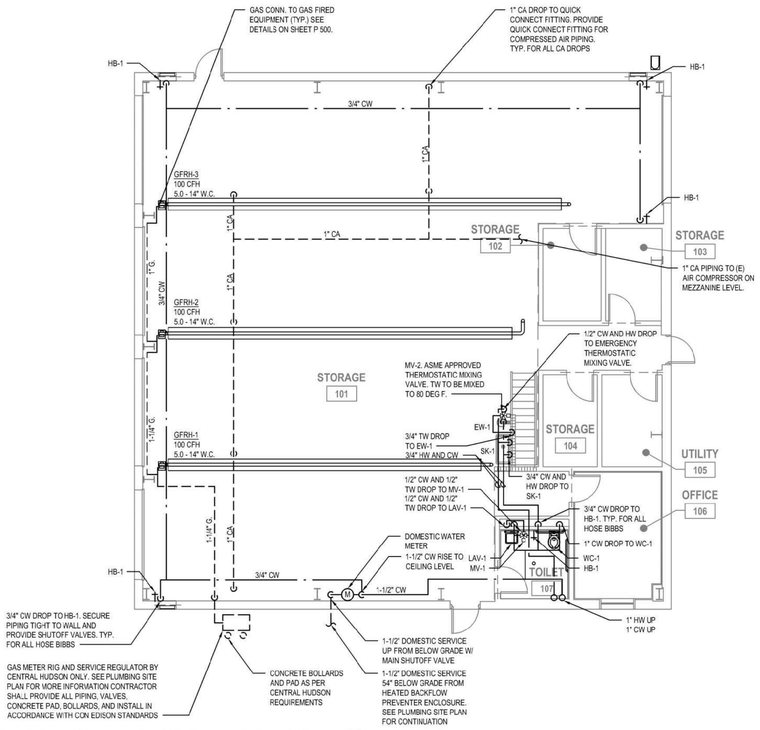

1 **First Floor Domestic Water and Gas Plan**
SCALE: 1/8" = 1'-0"

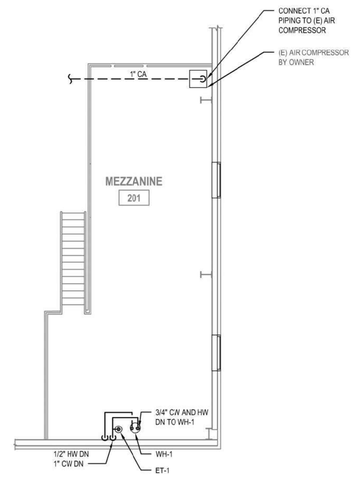

2 **Mezzanine Domestic Water and Gas Plan**
SCALE: 1/8" = 1'-0"

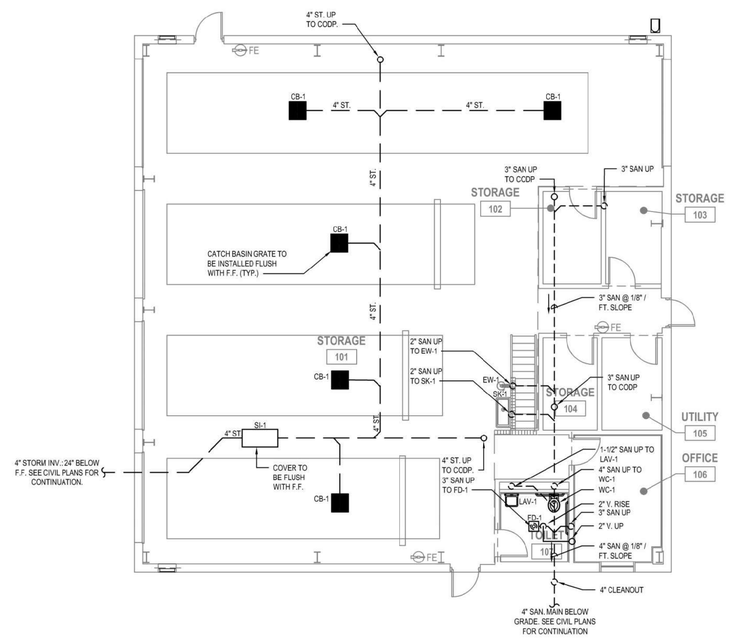

3 **Underslab Sanitary, Storm, and Vent Plan**
SCALE: 1/8" = 1'-0"

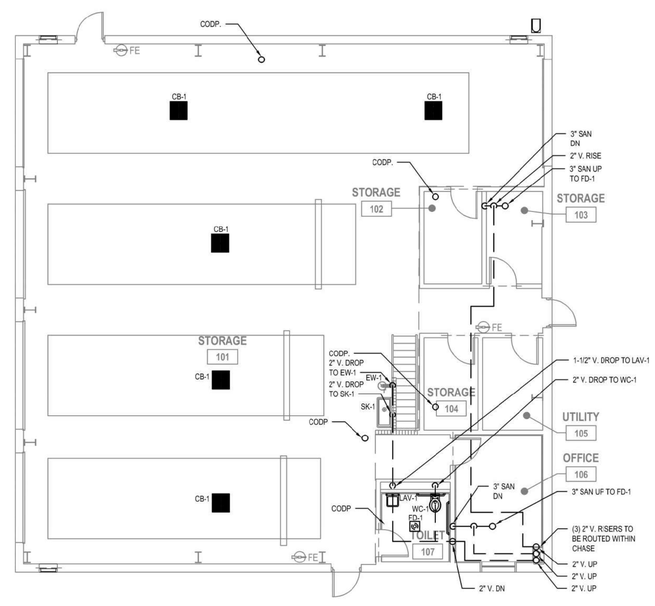

4 **First Floor Sanitary, Storm, and Vent Plan**
SCALE: 1/8" = 1'-0"

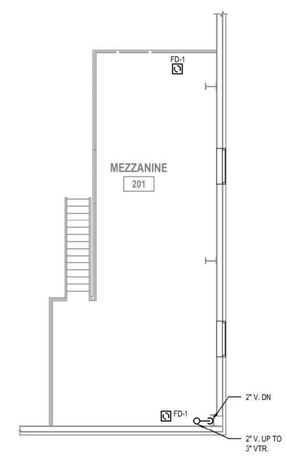

5 **Mezzanine Sanitary, Storm, and Vent Plan**
SCALE: 1/8" = 1'-0"

H2M architects + engineers
538 Broad Hollow Road, 4th Floor East
Melville, NY 11747
631.756.8000 • www.h2m.com

CONSULTANTS:

MARK	DATE	DESCRIPTION

STATE OF NEW YORK · JONATHAN RICHARD MILLER · 096440-1 · LICENSED PROFESSIONAL ENGINEER

"ALTERATION OF THIS DOCUMENT EXCEPT BY A LICENSED PROFESSIONAL IS ILLEGAL"

DESIGNED BY:	DRAWN BY:	CHECKED BY:	REVIEWED BY:
JRM	KJE		

PROJECT No.:	DATE:	SCALE:
VGFD2001	JULY 2022	AS SHOWN

CLIENT
VAILS GATE FIRE DISTRICT

New Storage Building (Phase I)
New Fire Station (Phase II)

872 Blooming Grove Turnpike
New Windsor, NY 12553

CONTRACT
CONTRACT G
GENERAL CONSTRUCTION

STATUS
FINAL BID DOCUMENT

SHEET TITLE
PLUMBING FLOOR PLAN

DRAWING No.
P1 110.00

X:\VGFD\Vails Gate Fire Dept\VGFD2001-Vails Gate FD New Firehouse\02-BIM-CADD\Cmd-exp\plans\Storage Building\P 110.00 - PLUMBING FLOOR PLAN.dwg Last Modified: Jul 18, 2022 - 8:47am Plotted on: Jul 18, 2022 - 8:37am By: ivancarraman

HANGER SPACING

PIPING MATERIAL	MAX. HORIZONTAL (FT)	MAX. VERTICAL (FT)
ABS PIPE	4	10
ALUMINUM TUBING	10	15
BRASS PIPE	10	10
CAST-IRON PIPE	5	15
COPPER OR COPPER ALLOY PIPE	12	10
COPPER OR COPPER ALLOY PIPE 1½"Ø OR SMALLER	6	10
COPPER OR COPPER ALLOY PIPE 1½"Ø OR LARGER	10	10
PEX	2.67	10
CPVC 1" OR SMALLER	3	10
CPVC 1-1/4" OR LARGER	4	10
STEEL PIPE	12	15
POLYETHYLENE /ALUMINUM/ POLYETHYLENE	2.67	4
PVC PIPE	4	10
STAINLESS STEEL DRAINAGE	10	10

HANGER ROD SCHEDULE

PIPE SIZE	ROD SIZE	PIPE SIZE	ROD SIZE
UP TO 2"	3/8" DIA.	4" THRU 5"	5/8" DIA.
2 1/2" THRU 3"	1/2" DIA		

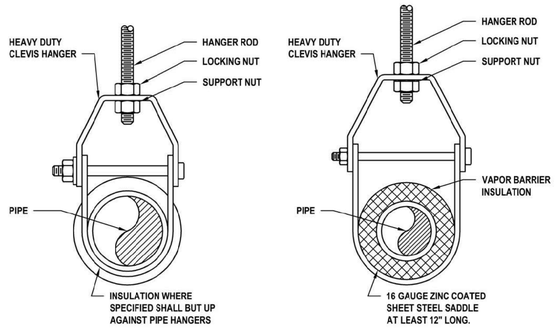

1 Pipe Hanger Detail
SCALE: NTS

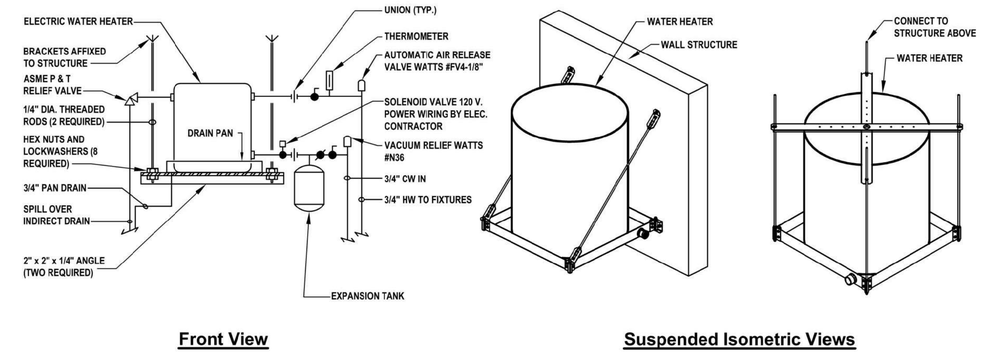

Front View **Suspended Isometric Views**

2 Domestic Water Heater Suspended From Wall
SCALE: NTS

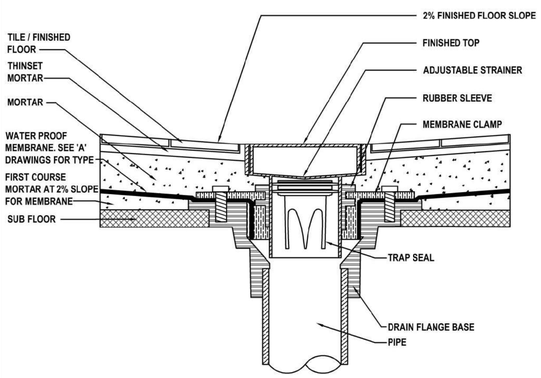

3 Floor Drain Detail
SCALE: NTS

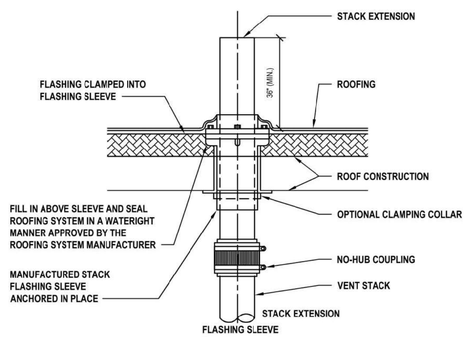

NOTES:
1. FINAL VENT STACK OUTLET LOCATION TO BE 15 FEET (MIN.) AWAY FROM ANY OUTSIDE VENTILATION AIR INTAKE LOCATION, 10 FEET (MIN.) FROM ANY WALL OR STRUCTURE AND 3 (MIN.) FEET ABOVE STRUCTURE.

4 Vent Through Roof
SCALE: NTS

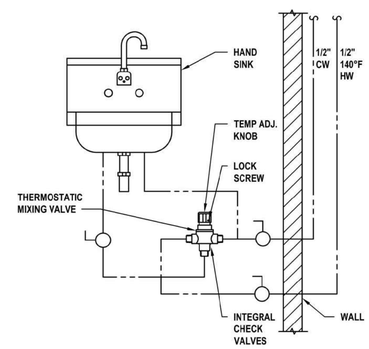

NOTE:
ADJUST OUTPUT TEMPERATURE TO A MAXIMUM OF 110°F

5 Under Sink Thermostatic Mixing Valve Detail
SCALE: NTS

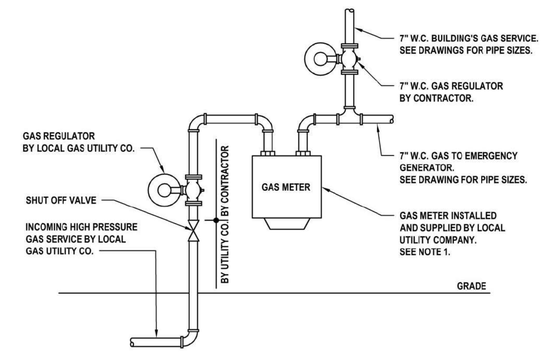

NOTES:
GAS METER RIG SHALL BE CONSTRUCTED IN ACCORDANCE WITH ALL REQUIREMENTS OF GAS UTILITY CO. INCLUDING, BUT NOT LIMITING TO; DIMENSIONS, PIPING, FITTINGS, CONNECTIONS, VALVE, CONCRETE PADS, AND BOLLARDS.

6 Gas Meter With Gas Fired Emergency Generator Detail
SCALE: NTS

NOTES:
1. FILL PORT MARKING SYMBOL SHALL BE A SOLID YELLOW HEXAGON.

DIESEL

Tank ID #:	------	
This tank conforms with 6 NYCRR Part 613		
This tank is manufactured to UL-1316 Standard		
Manf. Date:	MM-YYYY	
Tank Dia.:	X ft. - X in.	
Tank Length:	X ft. - X in.	
Nominal Capacity:	---	gallons
Design Capacity:	---	gallons
Working Capacity:	---	gallons
Model No.:	---	
Manufacturer:	---	
Intalled Date/By:	---	
Serial No.:	---	

NOTES:
1. NFPA DIAMOND SIGN SHALL BE OF DURABLE MATERIAL.
2. SIGN SHALL BE PERMANENTLY AFFIXED TO GASOLINE DISPENSER AT A CLEARLY VISIBLE LOCATION.

NOTES:
1. LABEL SHALL BE OF DURABLE MATERIAL.
2. LABEL SHALL BE PERMANENTLY AFFIXED INSIDE FILL PORT (WITH 18-INCH STAINLESS STEEL CHAIN) AND AT TANK MONITORING PANEL.

7 Diesel Fuel Signage
SCALE: NTS

NOTES:
1. SIGNS SHALL BE OF DURABLE MATERIAL.
2. SIGN 'A' - "DANGER" SHALL BE WHITE LETTERING ON A RED BACKGROUND. ALL LETTERS SHALL NOT BE LESS THAN 3" IN HEIGHT AND 1/2" IN STROKE.
3. SIGN 'B' - "DANGER" AND HAZCOM "FLAMMABLE" SIGNS SHALL BE PERMANENTLY AFFIXED TO OR NEAR TANK AT CLEARLY VISIBLE LOCATIONS.
4. SIGN 'C' - "CAUTION" SIGN SHALL BE PERMANENTLY AFFIXED IN A CLEARLY VISIBLE LOCATION ABOVE OR BELOW THE OVERFILL ALARM PANEL.
5. SIGN 'D' - "EMERGENCY SHUT-OFF" SIGN SHALL BE PERMANENTLY AFFIXED IN A CLEARLY VISIBLE LOCATION AT OR NEAR EMERGENCY KILL SWITCH.

8 HazCom Signage
SCALE: NTS

WARNING
1. NO SMOKING.
2. SHUT OFF MOTOR.
3. DISCHARGE YOUR STATIC ELECTRICITY BEFORE FUELING BY TOUCHING A METAL SURFACE AWAY FROM THE NOZZLE.
4. TO PREVENT STATIC CHARGE, DO NOT REENTER YOUR VEHICLE WHILE GASOLINE IS PUMPING.
5. IF A FIRE STARTS, DO NOT REMOVE NOZZLE - BACK AWAY IMMEDIATELY.
6. IT IS UNLAWFUL AND DANGEROUS TO DISPENSE GASOLINE INTO UNAPPROVED CONTAINERS.
7. NO FILLING OF PORTABLE CONTAINERS IN OR ON A MOTOR VEHICLE. PLACE CONTAINER ON GROUND BEFORE FILLING.

NOTES:
1. SIGN SHALL BE OF DURABLE MATERIAL.
2. POST SIGNS AT DISPENSER.

9 NYS Fire Code Signage
SCALE: NTS

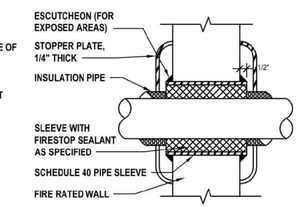

FIRE STOPPING NOTES:
1. CONTRACTOR SHALL BE RESPONSIBLE FOR ENSURING THAT PENETRATIONS ARE PROPERLY FIRE STOPPED WITH THE FOLLOWING:
   1.A. THE FIRE STOPPING SYSTEM AND COMPONENTS SHALL BE AS MANUFACTURED BY 3M. NO SUBSTITUTIONS SHALL BE PERMITTED.
   1.B. METAL PIPES OR CONDUIT THROUGH BLOCK WALL SHALL USE UL SYSTEM NO. CAJ1044 AND 3M PRODUCT CP25 WB & CAULK
   1.C. METAL PIPES THROUGH GYPSUM WALLS SHALL USE UL SYSTEM NO. WL 1001 AND 3M PRODUCT CP 25 WB & CAULK

10 Pipe Penetrations Through Fire Rated Walls
SCALE: NTS

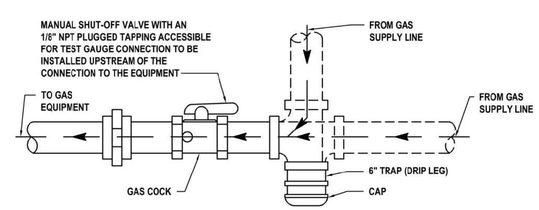

11 Typical Gas Connection Detail
SCALE: NTS

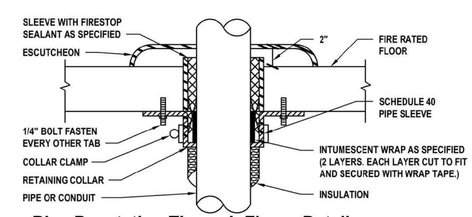

12 Pipe Penetration Through Floors Detail
SCALE: NTS

H2M architects + engineers
538 Broad Hollow Road, 4th Floor East
Melville, NY 11747
631.756.8000 • www.h2m.com

CONSULTANTS:

MARK	DATE	DESCRIPTION

STATE OF NEW YORK · JONATHAN RICHARD MILLER · 096440-1 · LICENSED PROFESSIONAL ENGINEER

"ALTERATION OF THIS DOCUMENT EXCEPT BY A LICENSED PROFESSIONAL IS ILLEGAL"

DESIGNED BY:	DRAWN BY:	CHECKED BY:	REVIEWED BY:
JRM	KJE		
PROJECT No.: VGFD2001	DATE: JULY 2022	SCALE: AS SHOWN	

CLIENT
VAILS GATE FIRE DISTRICT

New Storage Building (Phase I)
New Fire Station (Phase II)

872 Blooming Grove Turnpike
New Windsor, NY 12553

CONTRACT
CONTRACT G
GENERAL CONSTRUCTION

STATUS
FINAL BID DOCUMENT

SHEET TITLE
PLUMBING DETAILS

DRAWING No.
P 500.00

X:\VGFD \Vails Gate Fire Dist\!!!VGFD2001 -\Vails Gate FD\New Firehouse\!!!2.BIM-CAD\Cnx-docs\dwn\Storage Building\P 500.00 - PLUMBING DETAILS.dwg Last Modified: Jul 18, 2022 - 9:59am Plotted on: Jul 18, 2022 - 8:37pm By kescampson

NOTE: ALL RIGHTS RESERVED. THIS DRAWING MUST NOT BE REPRODUCED IN ANY FORM WITHOUT THE WRITTEN PERMISSION OF HIGHLAND TANK®. HIGHLAND TANK® SHALL BE RESPONSIBLE ONLY FOR ITEMS INDICATED ON THIS FABRICATION DRAWING UNLESS OTHERWISE NOTED. CUSTOMER IS RESPONSIBLE FOR VERIFYING CORRECTNESS OF SIZE AND LOCATION OF FITTINGS, ACCESSORIES, AND COATINGS SHOWN ON THIS DRAWING.

TOUCH UP OF FINISHED PAINT IS REQUIRED BY INSTALLATION CONTRACTOR. TOUCH UP PAINT SHIPPED WITH TANK.

SHEET 1 OF 4
SHEET 1 TANK DETAILS
SHEET 2 ASS'Y DRAWING
SHEET 3 PIPING DETAILS.
SHEET 4 EQUIPMENT END VIEW

HIGH-LINK LEVEL SHIELD DETAIL

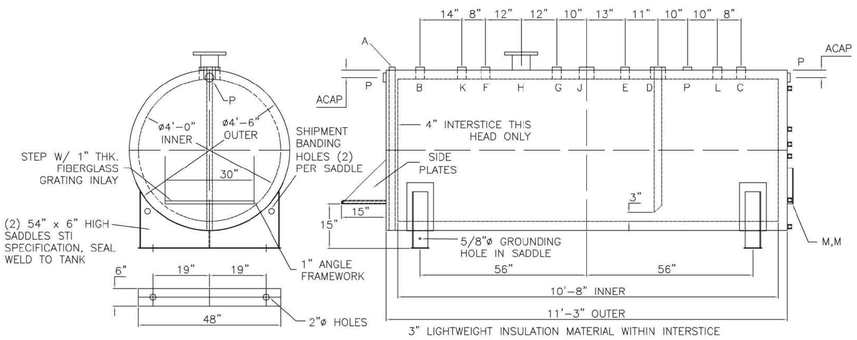

3" LIGHTWEIGHT INSULATION MATERIAL WITHIN INTERSTICE

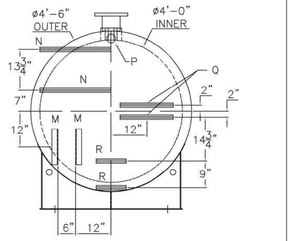

DESIGN DATA

CAPACITY : 1,000 GALLONS
TYPE: FIREGUARD® CYLINDRICAL
FIREGUARD® IS A TRADEMARK OF THE STEEL TANK INSTITUTE
NO. REQ. – (1)
OPERATING PRESSURE – ATMOSPHERIC
SPECIFIC GRAVITY = 1.0
TANK MATERIAL – MILD CARBON STEEL
THICKNESS – INNER – 7 GAUGE
THICKNESS – OUTER – 7 GAUGE
MIN. GAUGE OR THICKNESS (PER U.L. 2085)
CONSTRUCTION – INNER – LAP WELD OUTSIDE ONLY
CONSTRUCTION – OUTER – LAP WELD OUTSIDE ONLY
TANK TEST – INNER – 5 PSIG OUTER – 5 PSIG
INT. FINISH – NONE
EXT. FINISH – SP-6 BLAST, FINISH PAINT WHITE
LABEL– UL 2085 AND FIREGUARD® PER sti

LEGEND

A	2" INTERSTITIAL MONITOR PIPE– MALE NPT END (LEAK SENSOR)	H	6" FFSO 150# FLANGE THROUGH OUTER SHELL ONLY, MARK WITH SPECIAL WARNING LABEL – INTERSTITIAL EMERGENCY VENT USE ONLY	P	2" FITTING THROUGH OUTER SHELL ONLY WITH CAST IRON PLUG– MFG USE ONLY
B	2" FEMALE FIREGUARD CPLG. (FILL)			Q	1.5" X 18" L UNI-STRUT FOR DISPENSER MOUNTING
C	2" FEMALE FIREGUARD CPLG. w/ 2" x ½" BUSHING (RELIEF LINE)	J	4" FEMALE FIREGUARD CPLG. (PRIMARY EMERGENCY VENT)	R	1.5" X 10" L UNI-STRUT FOR X-PROOF NEMA 4X JUNCTION BOX
D	4" FEMALE FIREGUARD CPLG. w/ 4" x 2" DT BUSHING & CS DROP PIPE TO 3" OFF TANK BOTTOM. 45° MITER (DISPENSER SUPPLY)	K	2" FEMALE FIREGUARD CPLG. (NORMAL WORKING VENT)		
E	2" FEMALE FIREGUARD CPLG. (HI-LINK MAG PROBE)	L	4" FEMALE FIREGUARD CPLG. (SPARE)		
F	2" FEMALE FIREGUARD CPLG. (CLOCK GAUGE)	M	¼" X 2" X 2" ANGLE FOR HOSE REEL MOUNTING		
G	2" FEMALE FIREGUARD CPLG. (HIGH LEVEL SENSOR)	N	1.5" X 24" L UNI-STRUT FOR FUEL SHIELD MINI MOUNTING		

NOTES:
STRIKER PLATES ARE NOT SUPPLIED ON FIREGUARDS® UNLESS SPECIFIED

Highland Tank
UNLESS NOTED, TOLERANCES ARE +/- 1"
1000 GALLON 48"ø CYL. FIREGUARD®
PATENT: 5,695,089 PATENT: 5,809,650
CUSTOMER: H2M ARCHITECTS
EAST MELVILLE, NY.
PROJECT: VAILS GATE FIRE HOUSE
VAILS GATE, NY.
QUOTE NO: 510923 CHK'D BY:

SCALE:	DATE:	DWG. BY:	DWG. NO:
1/2" = 1'	11/9/21	002	118993-1

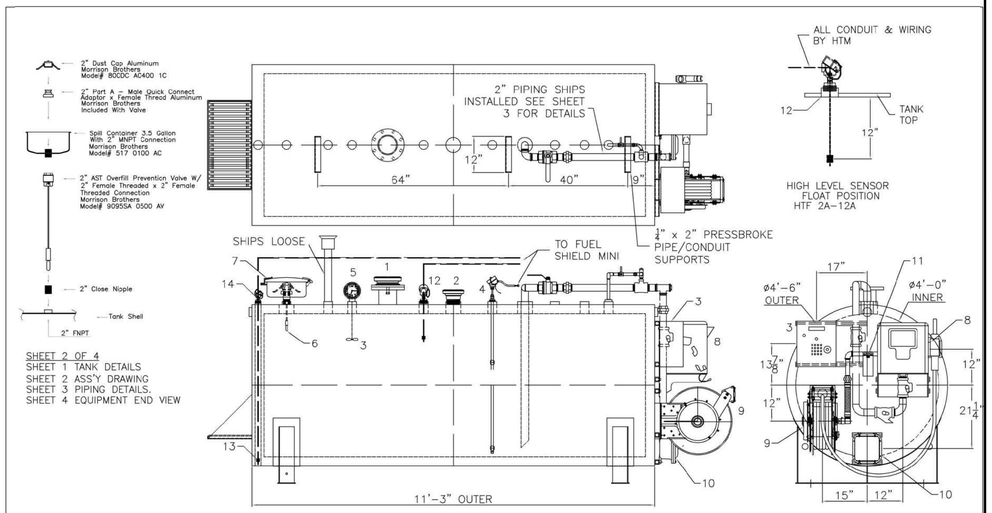

SHEET 2 OF 4
SHEET 1 TANK DETAILS
SHEET 2 ASS'Y DRAWING
SHEET 3 PIPING DETAILS.
SHEET 4 EQUIPMENT END VIEW

SHIP LOOSE: (INSTALLATION ON SITE BY OTHERS)
2" GALVANIZED NORMAL MUSHROOM VENT & 2" X 8' LONG SCH. 40 GALVANIZED RISER PIPE (TBE), VENT SHOULD BE INSTALLED ON ONE END OF THE PIPE.

LEGEND ALL ITEMS LISTED SHIP INSTALLED

1	6" FLANGED EMERGENCY VENT – 8oz./sq.in.	7	3.5 GALLON POWDER COATED STEEL THREADED SPILL BOWL W/ QUICK CONNECT, DUST CAP & 2" NIPPLE	11	1" ALUMINUM FILTER HEAD W/ 30 MICRON FILTER
2	4" MNPT EMERGENCY VENT – 8oz./sq.in.	8	HL-77 PUMP PACKAGE. INCLUDES (4) DIGIT CABINET DISPENSER, SHELF, PULSE OUTPUT & PUMP	12	HTF 1 FLOAT HIGH LEVEL STEM SENSOR W/ 15' OF CABLE (2A-12A)
3	HIGH-LINK FUELSHIELD MINI PLUS PACKAGE – DIESEL (UP TO 2 HOSES)			13	HTLP 1.5 LIQUID ONLY LEAK SENSOR W/ 15' OF CABLE
4	MAGNETOSTRICTIVE LEVEL SENSOR	9	HOSE REEL W/ 1" x 25' HOSE & 1" AUTOMATIC NOZZLE W/ GREEN COVER (DIESEL)	14	HTSC-2B NEMA 4 CAP FOR LEAK SENSOR
5	CLOCK GAUGE W/ STANDARD FLOAT – 2" (#818) *CALIBRATE BEFORE SHIPPING*				
6	2" AST OVERFILL PREVENTION VALVE – 2" FM THRD x 2" FM THRD CONN (NO DROP TUBE)	10	EXPLOSION PROOF (NEMA 7) JUNCTION BOX W/ TERMINAL STRIP FOR ON SITE CONNECTION		

Highland Tank
UNLESS NOTED, TOLERANCES ARE +/- 1"
1000 GALLON 48"ø CYL. FIREGUARD®
PATENT: 5,695,089 PATENT: 5,809,650
CUSTOMER: H2M ARCHITECTS
EAST MELVILLE, NY.
PROJECT: VAILS GATE FIRE HOUSE
VAILS GATE, NY.
QUOTE NO: 510923 CHK'D BY:

SCALE:	DATE:	DWG. BY:	DWG. NO:
1/2" = 1'	11/9/21	002	118993-2

STANDARD STICKER PACKAGE – DIESEL (SHIPS LOOSE)
PACKAGE INCLUDES:
(4) "DANGER DIESEL FUEL" – 10" X 14" VINYL ADHESIVE WARNING SIGN
(4) "DANGER NO SMOKING" – 10" X 14" VINYL ADHESIVE WARNING SIGN
(4) "COMBUSTIBLE" – 6" X 14" RED LETTERING
(4) VINYL ADHESIVE PLACARD (DIESEL/FLAMMABLE HEATING OIL) CLASS 3

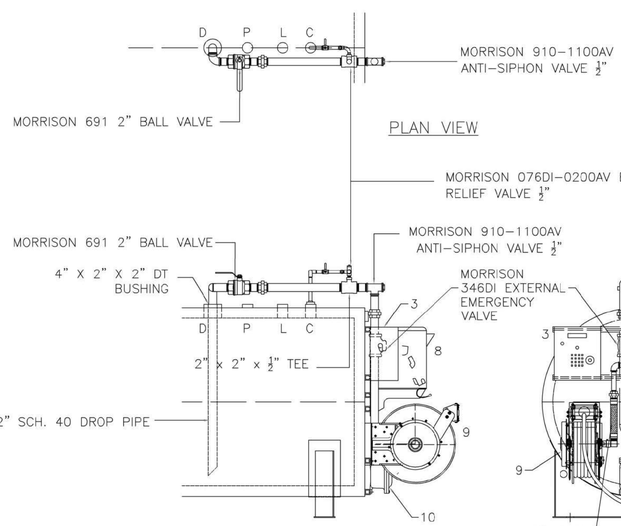

SHEET 3 OF 4
SHEET 1 TANK DETAILS
SHEET 2 ASS'Y DRAWING
SHEET 3 PIPING DETAILS.
SHEET 4 EQUIPMENT END VIEW

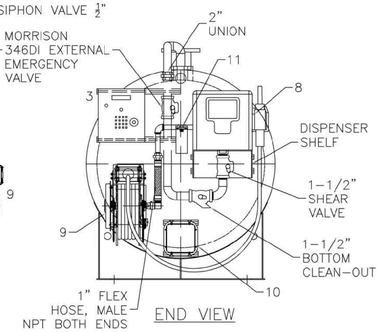

Highland Tank
UNLESS NOTED, TOLERANCES ARE +/- 1"
1000 GALLON 48"ø CYL. FIREGUARD®
PATENT: 5,695,089 PATENT: 5,809,650
CUSTOMER: H2M ARCHITECTS
EAST MELVILLE, NY.
PROJECT: VAILS GATE FIRE HOUSE
VAILS GATE, NY.
QUOTE NO: 510923 CHK'D BY:

SCALE:	DATE:	DWG. BY:	DWG. NO:
NTS	11/9/21	002	118993-3

SHEET 4 OF 4
SHEET 1 TANK DETAILS
SHEET 2 ASS'Y DRAWING
SHEET 3 PIPING DETAILS.
SHEET 4 EQUIPMENT END VIEW

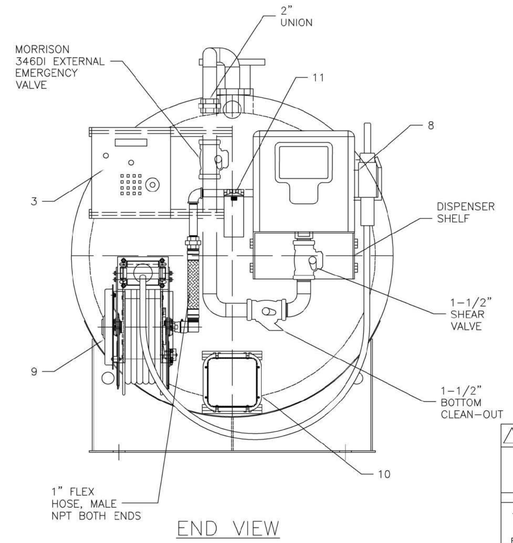

Highland Tank
UNLESS NOTED, TOLERANCES ARE +/- 1"
1000 GALLON 48"ø CYL. FIREGUARD®
PATENT: 5,695,089 PATENT: 5,809,650
CUSTOMER: H2M ARCHITECTS
EAST MELVILLE, NY.
PROJECT: VAILS GATE FIRE HOUSE
VAILS GATE, NY.
QUOTE NO: 510923 CHK'D BY:

SCALE:	DATE:	DWG. BY:	DWG. NO:
1" = 1'	11/9/21	002	118993-4

5 **1,000 GAL. Fuel Tank Details**
SCALE: NTS

X:\VGFD\Vails Gate Fire Dept\VGFD2001-Vails Gate FD\New Firehouse\02-BIM-CADD\Cad\acad\Storage Building\P 501.00 - FUEL OIL TANK DETAILS.dwg Last Modified: May 06, 2022 - 3:10pm Plotted on: Jul 18, 2022 - 8:37am By: vasugarman

H2M architects + engineers
538 Broad Hollow Road, 4th Floor East
Melville, NY 11747
631.756.8000 • www.h2m.com

CONSULTANTS:

MARK	DATE	DESCRIPTION

STATE OF NEW YORK · JONATHAN RICHARD MILLER · 096440-1 · LICENSED PROFESSIONAL ENGINEER

"ALTERATION OF THIS DOCUMENT EXCEPT BY A LICENSED PROFESSIONAL IS ILLEGAL"

DESIGNED BY:	DRAWN BY:	CHECKED BY:	REVIEWED BY:
JRM	KJE		

PROJECT No.:	DATE:	SCALE:
VGFD2001	JULY 2022	AS SHOWN

CLIENT
VAILS GATE FIRE DISTRICT

New Storage Building (Phase I)
New Fire Station (Phase II)

872 Blooming Grove Turnpike
New Windsor, NY 12553

CONTRACT
CONTRACT G
GENERAL CONSTRUCTION

STATUS
FINAL BID DOCUMENT

SHEET TITLE
DIESEL FUEL TANK DETAILS

DRAWING No.
P 501.00

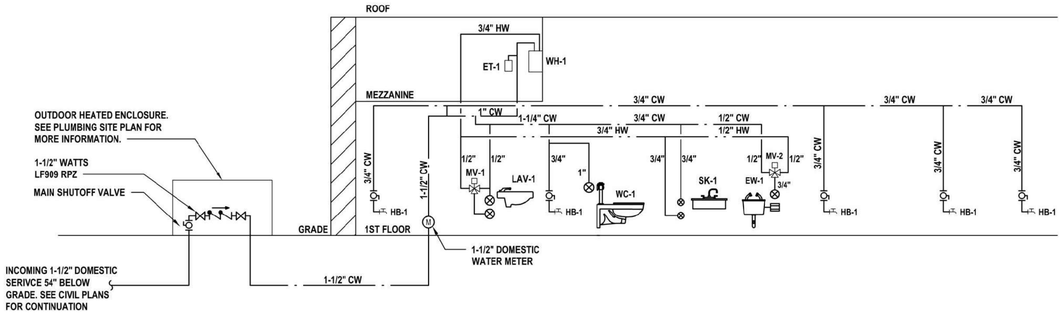

1 **Domestic Water Riser Diagram**
SCALE: NTS

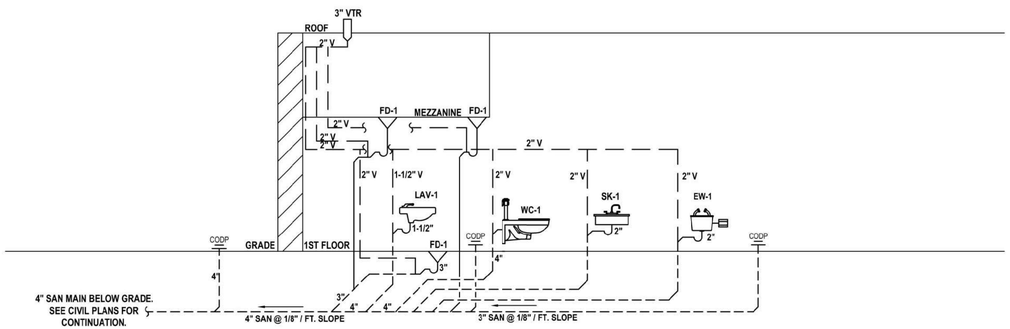

2 **Sanitary and Vent Riser Diagram**
SCALE: NTS

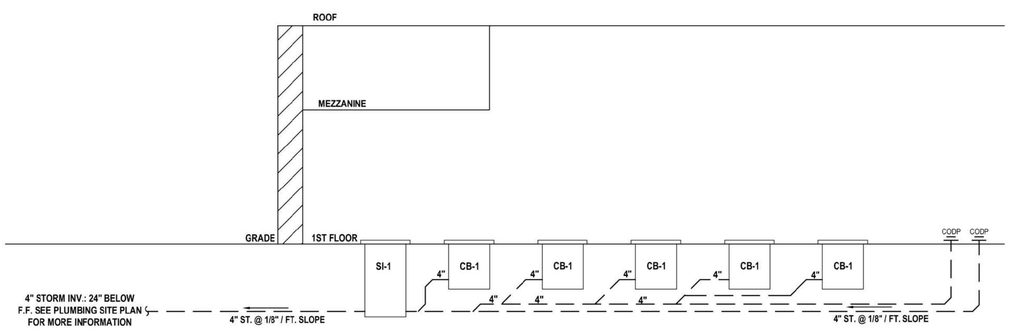

3 **Storm Riser Diagram**
SCALE: NTS

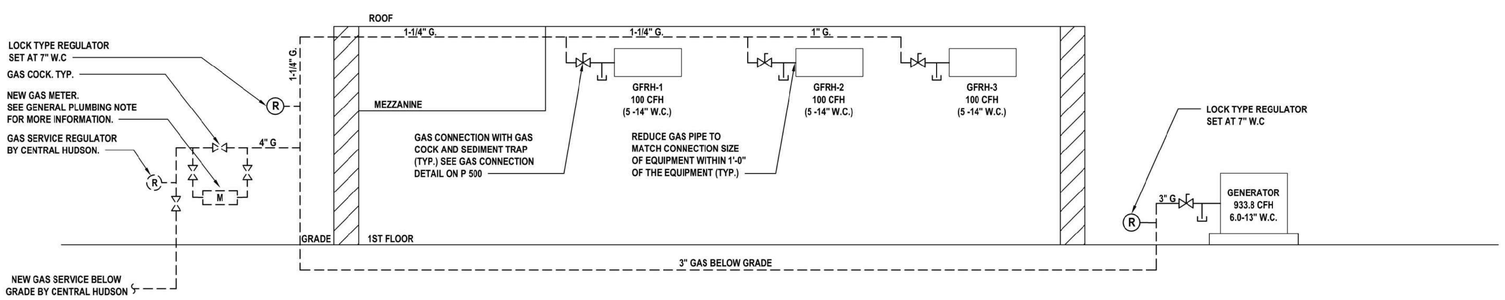

4 **Gas Riser Diagram**
SCALE: NTS

H2M architects + engineers
538 Broad Hollow Road, 4th Floor East
Melville, NY 11747
631.756.8000 • www.h2m.com

CONSULTANTS:

MARK	DATE	DESCRIPTION

STATE OF NEW YORK · JONATHAN RICHARD MURATORE · 096440-1 · LICENSED PROFESSIONAL ENGINEER

"ALTERATION OF THIS DOCUMENT EXCEPT BY A LICENSED PROFESSIONAL IS ILLEGAL"

DESIGNED BY:	DRAWN BY:	CHECKED BY:	REVIEWED BY:
JRM	KJE		

PROJECT No.:	DATE:	SCALE:
VGFD2001	JULY 2022	AS SHOWN

CLIENT
VAILS GATE FIRE DISTRICT

New Storage Building (Phase I)
New Fire Station (Phase II)

872 Blooming Grove Turnpike
New Windsor, NY 12553

CONTRACT
CONTRACT G
GENERAL CONSTRUCTION

STATUS
FINAL BID DOCUMENT

SHEET TITLE
PLUMBING RISER DIAGRAMS

DRAWING No.
P1 600.00

X:\VGFD (Vails Gate Fire Dept)\VGFD2001-(Vails Gate FD-New Firehouse)\02-BIM-CADD\Con-docs\plumb\Storage Building\P 600.00 - PLUMBING RISER DIAGRAMS.dwg Last Modified: Jul 08, 2022 - 10:13am Plotted on: Jul 18, 2022 - 8:37am By kescarraman

ABBREVIATIONS

AFF	ABOVE FINISHED FLOOR
BCU	BUILDING CONTROL UNIT
BTU	BRITISH THERMAL UNIT
CFH	CUBIC FEET PER HOUR
CFM	CUBIC FEET PER MINUTE
CLG	CEILING
COMM.	COMMUNICATION
CV	CONTROL VALVE
(D)	DEMOLISH
DB	DRY BULB
DCV	DEMAND CONTROLLED VENTILATION
DEG. F	DEGREES FAHRENHEIT
DIA	DIAMETER
DX	DIRECT EXPANSION
'E'	ELECTRICAL CONTRACTOR
(E)	EXISTING
EA	EACH
EAT	ENTERING AIR TEMPERATURE
EER	ENERGY EFFICIENCY RATING
ESP	EXTERNAL STATIC PRESSURE
FAI	FRESH AIR INTAKE
FD	FLOOR DRAIN
FLA	FULL LOAD AMPS
FT. H20	FEET OF WATER
'G'	GENERAL CONSTRUCTION CONTRACTOR
GPM	GALLONS PER MINUTE
GPH	GALLONS PER HOUR
H	HEIGHT
'H'	HVAC CONTRACTOR
HP	HORSEPOWER
IN.	INCHES
IN. W.C. (W.G.)	INCHES WATER COLUMN (WATER GAUGE)
KW	KILOWATTS
L	LENGTH
LAT	LEAVING AIR TEMPERATURE
LBS	POUNDS
LCD	LIQUID CRYSTAL DISPLAY
LDB	LEAVING DRY BULB TEMPERATURE
LWB	LEAVING WET BULB TEMPERATURE
LWT	LEAVING WATER TEMPERATURE
M	METER
MAX	MAXIMUM
MBH	1,000 BTU PER HOUR
MCA	MINIMUM CIRCUIT AMPACITY
MIN	MINIMUM
MNF	MANUFACTURER
N.C.	NORMALLY CLOSED
N.O.	NORMALLY OPEN
NFPA	NATIONAL FIRE PROTECTION ASSOCIATION
NPT	NATIONAL PIPE THREAD
NTS	NOT TO SCALE
OAI	OUTDOOR AIR INTAKE
OD	OUTER DIAMETER
OED	OPEN ENDED DUCT
'P'	PLUMBING CONTRACTOR
PD	PRESSURE DROP
PSIG	LBS / SQUARE INCH (GAUGE PRESSURE)
RD	ROOF DRAIN
RPM	REVOLUTIONS PER MINUTE
RPZ	REDUCED PRESSURE ZONE
SAT	SUPPLY AIR TEMPERATURE
SEER	SEASONAL ENERGY EFFICIENCY RATING
TEMP	TEMPERATURE
TG	TRANSFER GRILLE
TYP	TYPICAL
VFD	VARIABLE FREQUENCY DRIVE
W	WIDTH
WB	WET BULB
WMS	WIRE MESH SCREEN

DUCTWORK LEGEND

SYMBOL	ABBREV	DESCRIPTION
		DUCTWORK BRANCH CONNECTION
	VD	VOLUME DAMPER
	CD	ROUND FACE SUPPLY DIFFUSER
	SEE AIR DEVICE SCHEDULE	SIDEWALL SUPPLY, RETURN OR EXHAUST GRILLE/REGISTER
	SEE AIR DEVICE SCHEDULE	SQUARE FACE SUPPLY DIFFUSER
	SEE AIR DEVICE SCHEDULE	BOTTOM RETURN OR EXHAUST GRILLE/REGISTER
	FC	FLEXIBLE CONNECTION
		TURNING VANES
		RECTANGULAR TO ROUND TRANSITION
	AL	ACOUSTICAL LINING
		END CAP
	SEE AIR DEVICE SCHEDULE	SUPPLY DIFFUSER WITH DIRECTIONAL FLOW (SOLID HATCH INDICATES BLANK OFF PANEL)
		SUPPLY DUCT DROP (TURN DOWN)
		RETURN/EXHAUST DUCT DROP (TURN DOWN)
		SUPPLY DUCT RISE
		RETURN/EXHAUST DUCT RISE
DSD	DSD	DUCT SMOKE DETECTOR
M	MD	MOTORIZED DAMPER WITH ACTUATOR
OR	AD	ACCESS DOOR
	FD/AD	FIRE DAMPER WITH ACCESS DOOR
	FSD/AD	FIRE SMOKE DAMPER WITH ACCESS DOOR
		FAN

CONTROLS LEGEND

SYMBOL	ABBREV	DESCRIPTION
C		CARBON MONOXIDE SENSOR
T		THERMOSTAT
S		DIGITAL TEMPERATURE SENSOR
N		NITROGEN DIOXIDE
C2		CARBON DIOXIDE SENSOR

PIPING LEGEND

SYMBOL	ABBREV	DESCRIPTION
		NEW WORK
		PIPING DOWN/ PIPING UP

GENERAL NOTES

1. PROVIDE ALL MATERIALS AND EQUIPMENT AND PERFORM ALL LABOR REQUIRED TO INSTALL COMPLETE AND OPERABLE MECHANICAL SYSTEMS AS INDICATED ON THE DRAWINGS, AS SPECIFIED AND AS REQUIRED BY CODE.
2. THE CONTRACTOR, BY PRESENTING THEIR BID FOR THE WORK, REPRESENTS THAT HE/SHE HAS INSPECTED THE SITE AND IS COMPLETELY FAMILIAR WITH THE SCOPE OF WORK AND ALL FIELD CONDITIONS RELATED TO, AND AFFECTING THE WORK AND ITS PERFORMANCE. EXCEPTIONS AFFECTING THE WORK AND ITS PERFORMANCE, OR CONFLICTS BETWEEN FIELD CONDITIONS, SHALL BE BROUGHT TO THE ATTENTION OF THE ARCHITECT PRIOR TO THE SUBMISSION OF BIDS.
3. PERFORM ALL WORK IN ACCORDANCE WITH THE PLUMBING CODE, FIRE CODE, MECHANICAL CODE, ENERGY CONSERVATION CONSTRUCTION CODE, AND FUEL GAS CODE OF NEW YORK STATE AND THE REQUIREMENTS OF THE LOCAL AUTHORITIES HAVING JURISDICTION.
4. COMPLY WITH THE NATIONAL ELECTRIC CODE AND THE REQUIREMENTS OF DIVISION 26 FOR ALL ELECTRICAL INSTALLATIONS.
5. FIRE STOP ALL OPENINGS IN FIRE RATED CONSTRUCTION FOR PIPING, DUCTWORK, CONDUIT, ETC. PROVIDE FIRE DAMPERS AND ACCESS DOORS IN ALL OPENINGS IN FIRE RATED FLOORS, PARTITIONS, AND WALLS FOR DUCTWORK AS PER THE MECHANICAL CODE OF NEW YORK STATE. (SEE ARCHITECTURAL DRAWINGS FOR LOCATIONS OF FIRE RATED CONSTRUCTION.)
6. DO NOT SCALE DRAWINGS. DRAWINGS FOR HVAC WORK ARE DIAGRAMMATIC AND ARE INTENDED TO CONVEY SCOPE AND GENERAL ARRANGEMENT ONLY. THE LOCATIONS OF ALL ITEMS SHOWN ON THE DRAWINGS OR CALLED FOR IN THE SPECIFICATIONS THAT ARE NOT DEFINITELY FIXED BY DIMENSIONS ARE APPROXIMATE. COORDINATE CONTRACT DOCUMENTS, PROJECT REQUIREMENTS, WORK OF OTHERS, AND EQUIPMENT AND MATERIALS PURCHASED WITH FIELD DIMENSIONS. INSTALL ALL EQUIPMENT AS PER MANUFACTURER'S REQUIREMENTS TO PROVIDE PROPER CLEARANCE FOR INSTALLATION, OPERATION, AND MAINTENANCE. CONTRACTOR'S INTENDED MEANS AND METHODS OF INSTALLATION AND CONTRACTOR'S FABRICATED ITEMS SHALL ENSURE A PROPER "FIT" AND INSTALLATION. BRING ANY CONFLICTS TO THE ATTENTION OF THE ARCHITECT/ENGINEER DURING THE SUBMITTAL PHASE FOR RESOLUTION PRIOR TO PURCHASING ANY EQUIPMENT.
7. MAINTAIN MAXIMUM HEADROOM AND SPACE CONDITIONS AT ALL POINTS. WHERE HEADROOM AND SPACE CONDITIONS APPEAR INADEQUATE, NOTIFY THE ARCHITECT/ENGINEER PRIOR TO PROCEEDING WITH INSTALLATION. MAINTAIN A MINIMUM OF 6'-8" CLEARANCE FROM FINISHED FLOOR TO UNDERSIDE OF PIPES, DUCTS, CONDUITS, SUSPENDED EQUIPMENT, ETC., THROUGHOUT ACCESS ROUTES IN MECHANICAL ROOMS.
8. FIELD VERIFY AND COORDINATE ALL DUCT AND PIPING DIMENSIONS BEFORE FABRICATION. MAKE MODIFICATIONS IN THE LAYOUT AS NEEDED TO PREVENT CONFLICT WITH WORK OF OTHER TRADES OR FOR PROPER EXECUTION OF THE WORK. OBTAIN THE APPROVAL OF THE ARCHITECT/ENGINEER FOR MODIFICATIONS.
9. PROVIDE PRODUCTS OF ONE MANUFACTURER WHERE TWO OR MORE ITEMS OF THE SAME TYPE OF MATERIAL OR EQUIPMENT IS REQUIRED.
10. INSTALL ALL EQUIPMENT AND APPURTENANCES IN ACCORDANCE WITH MANUFACTURER'S RECOMMENDATIONS, CONTRACT DOCUMENTS, AND APPLICABLE CODES AND REGULATIONS. REFER TO DETAILS FOR ADDITIONAL PIPING AND EQUIPMENT INSTALLATION REQUIREMENTS.
11. LOCATE ALL TEMPERATURE, PRESSURE, AND FLOW MEASURING DEVICES IN ACCESSIBLE LOCATIONS WITH STRAIGHT SECTION OF PIPE OR DUCT UP- AND DOWNSTREAM AS RECOMMENDED BY THE MANUFACTURER TO ENSURE MANUFACTURER CERTIFIED ACCURACY.
12. COORDINATE ALL EQUIPMENT CONNECTIONS WITH MANUFACTURER'S CERTIFIED DRAWINGS. COORDINATE AND PROVIDE ALL PIPING AND DUCT TRANSITIONS REQUIRED FOR FINAL CONNECTIONS TO EQUIPMENT.
13. COORDINATE LOCATIONS AND SIZES OF ALL FLOOR, WALL, AND ROOF OPENINGS WITH ALL OTHER TRADES. COORDINATE ALL PIPING AND EQUIPMENT SUPPORTED FROM STRUCTURE WITH GENERAL CONSTRUCTION WORK.
14. COORDINATE INSTALLATION OF SUPPLY, RETURN AND EXHAUST GRILLES WITH INSTALLATION OF FINISHED CEILINGS.
15. COMPLETE ALL PRESSURE TESTS BEFORE ANY MECHANICAL EQUIPMENT, DUCTWORK, OR PIPING INSULATION IS APPLIED.
16. TESTING, ADJUSTING, AND BALANCING AGENCY SHALL BE A MEMBER OF THE ASSOCIATED AIR BALANCE COUNCIL (AABC) OR THE NATIONAL ENVIRONMENTAL BALANCING BUREAU (NEBB). PERFORM ALL TESTING, ADJUSTING, AND BALANCING IN ACCORDANCE WITH THE SPECIFICATIONS.
17. MAKE ALL ATTACHMENTS TO JOISTS, TRUSSES, OR JOIST GIRDERS AT PANEL POINTS. PROVIDE BEAM CLAMPS MEETING MSS STANDARDS. THE USE OF C-CLAMPS IS NOT PERMITTED.
18. PROVIDE TRAPPED DRAIN PIPING FROM DRAIN PANS OF ALL COOLING COILS, FANS, AND OTHER ACTIVE DRAINS EXPOSED TO SYSTEM AIR STREAM. PROVIDE TRAP AT CONNECTION. WATER SEAL DEPTH 1 INCH GREATER THAN UNIT OPERATING PRESSURE. DIRECT DRAINS TO NEAREST FLOOR DRAIN, MOP SINK, OR OTHER LOCATION APPROVED BY THE ARCHITECT/ENGINEER.
19. PROVIDE ALL LOUVERS FOR INSTALLATION. SUBMIT LOUVER COLOR AND CONFIGURATION TO THE ARCHITECT/ENGINEER FOR APPROVAL.
20. FURNISH AND INSTALL ALL NECESSARY CONTROL WIRING, CONDUIT, AND ACCESSORIES AS REQUIRED TO PROVIDE FULLY FUNCTIONING SYSTEMS AND SEQUENCES OF OPERATION.
21. FURNISH ALL LINTELS FOR DUCT AND PIPE PENETRATIONS IN INTERIOR MASONRY WALLS.
22. FURNISH ALL SLEEVES FOR PIPE AND CONDUIT FLOOR, WALL, PARTITION, AND ROOF PENETRATIONS.
23. FURNISH ALL DUCT PENETRATIONS.
24. PERFORM ALL CUTTING AND ROUGH PATCHING AS REQUIRED IN THE EXECUTION OF THE WORK. PERFORM ALL FINISH PATCHING AND FLASHING.

LEGENDS/ABBREVIATIONS NOTES

1. ABBREVIATIONS AND SYMBOLS ON THIS SHEET DO NOT DEFINE THE SCOPE OF WORK.

H2M architects + engineers

538 Broad Hollow Road, 4th Floor East
Melville, NY 11747
631.756.8000 • www.h2m.com

CONSULTANTS:

MARK	DATE	DESCRIPTION

STATE OF NEW YORK · JOHN LAHEY · 101303 · LICENSED PROFESSIONAL ENGINEER

"ALTERATION OF THIS DOCUMENT EXCEPT BY A LICENSED PROFESSIONAL IS ILLEGAL"

DESIGNED BY:	DRAWN BY:	CHECKED BY:	REVIEWED BY:
MJV	MJV	MJV	JML

PROJECT No.:	DATE:	SCALE:
VGFD2001	JULY 2022	AS SHOWN

CLIENT

VAILS GATE FIRE DISTRICT

New Storage Building (Phase I)
New Fire Station (Phase II)

872 Blooming Grove Turnpike
New Windsor, NY 12553

CONTRACT

CONTRACT G
GENERAL CONSTRUCTION

STATUS

FINAL BID DOCUMENT

SHEET TITLE

MECHANICAL COVER SHEET AND NOTES

DRAWING No.

M1 001.00

X:\VGFD\Vails Gate Fire Dept\VGFD2001-Vails Gate FD\New Firehouse\02-BIM-CADD\Cnc-docs\hvac_Storage Building\M1001.00 - Mechanical Cover Sheet.dwg Last Modified: May 06, 2022 - 10:39am Plotted on: Jul 15, 2022 - 1:07pm By dragone

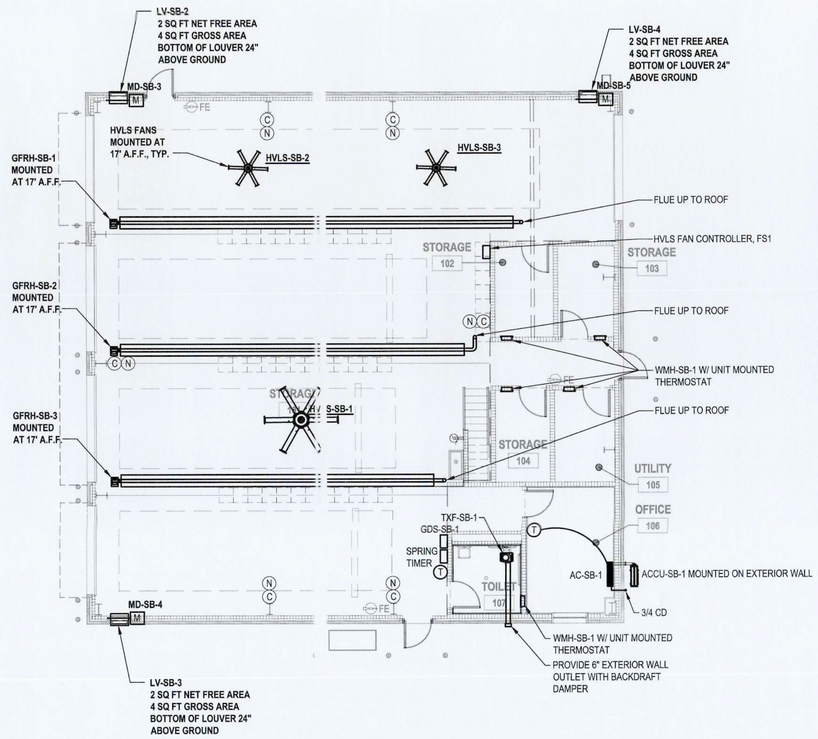

1 **Storage Building Mechanical Plan**
SCALE: 1/8" = 1'-0"

COMBUSTION AIR INDEX BASED ON 2020 NEW YORK STATE MECHANICAL CODE

ROOM NAME	SERVED BY	OCCUPANCY CLASSIFICATION	FLOOR AREA (FT^2)	SPACE VOLUME (FT^3)	CODE VOLUME PER 1,000 MBH INPUT (FT^3)	GAS INPUT (MBH)	VOLUME REQUIRED (FT^3)	NOTES
APPARATUS BAY	GFRH-SB-1,2,3	GARAGE	2650	79500	50	300	15000	SUFFICIENT VOLUME

NATURAL VENTILATION CALCULATION - OFFICE

IN ACCORDANCE WITH SECTION 402.2 OF THE 2020 NYS MECHANICAL CODE:
THE MINIMUM OPENABLE AREA TO THE OUTDOORS SHALL BE 4 PERCENT OF THE FLOOR AREA BEING VENTILATED.

FLOOR AREA * 0.04 = REQUIRED OPENABLE WINDOW AREA

135 SF * 0.04 = 5.94 SF AREA REQUIRED

TOTAL OPENABLE WINDOW AREA IN SPACE: 6 SF - COMPLIES

GENERAL NOTES:

1. REFER TO SEISMIC RESTRAINT SCHEDULE FOR DUCTWORK AND EQUIPMENT REQUIRING SEISMIC SUPPORTS

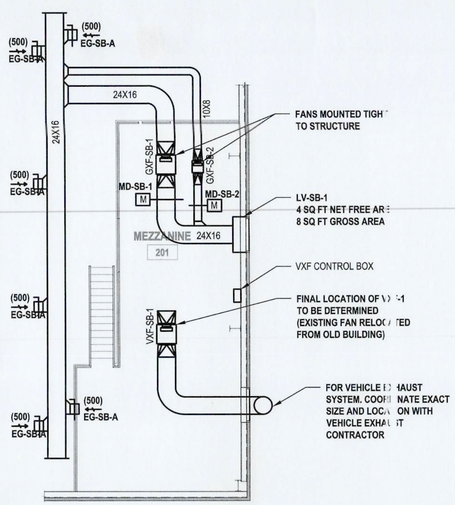

2 **Mezzanine Mechanical Plan**
SCALE: 1/8" = 1'-0"

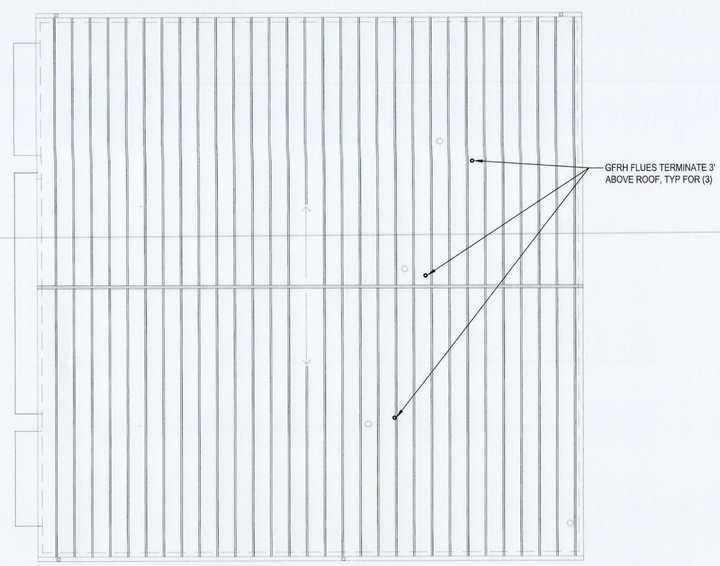

3 **Proposed Roof Plan**
SCALE: 1/8" = 1'-0"

H2M architects + engineers
538 Broad Hollow Road, 4th Floor East
Melville, NY 11747
631.756.8000 • www.h2m.com

CONSULTANTS:

MARK	DATE	DESCRIPTION
2	12/22/2022	REVS. PER TOWN COMMENTS

STATE OF NEW YORK · JOHN LAHEY · 101303 · LICENSED PROFESSIONAL ENGINEER

"ALTERATION OF THIS DOCUMENT EXCEPT BY A LICENSED PROFESSIONAL IS ILLEGAL"

DESIGNED BY:	DRAWN BY:	CHECKED BY:	REVIEWED BY:
MJV	MJV	MJV	JML

PROJECT No.:	DATE:	SCALE:
VGFD2001	JULY 2022	AS SHOWN

CLIENT
VAILS GATE FIRE DISTRICT

New Storage Building (Phase I)
New Fire Station (Phase II)

872 Blooming Grove Turnpike
New Windsor, NY 12553

CONTRACT
CONTRACT G
GENERAL CONSTRUCTION

STATUS
FINAL BID DOCUMENT

SHEET TITLE
FIRST FLOOR, MEZZANINE, & ROOF MECHANICAL PLANS

DRAWING No.
M1 100.02

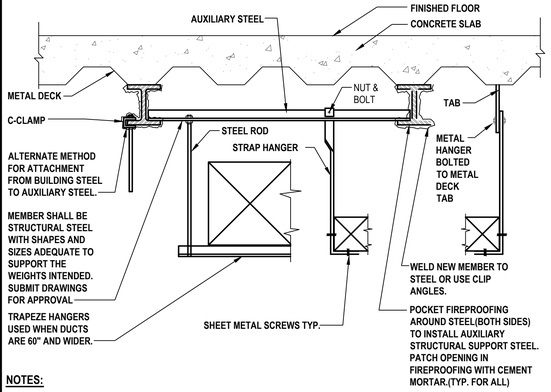

NOTES:

1. DUCTS SHALL NOT BE HUNG FROM OR SUPPORTED BY HUNG CEILING.
2. FOR DUCTS NOT EXCEEDING 2 SQ. FT. IN CROSS- SECTIONAL AREA, HANGERS SHALL BE OF METAL NOT LESS THAN 1/16".
3. FOR DUCTS LARGER THAN 2 SQ. FT. IN CROSS- SECTIONAL AREA, HANGERS SHALL BE OF METAL NOT LESS THAN 1" x 1/8".
4. FOR ALL DUCTS, HANGERS SHALL BE TURNED UNDER AND FASTENED TO THE BOTTOM OF DUCTS AS SHOWN ABOVE.
5. WHERE CROSS-SECTIONAL AREA OF DUCT EXCEEDS 8 SQ. FT., HANGERS SHALL BE SPACED NOT MORE THAN 4 FT. ON CENTERS.

1 Duct Support Attachment to I-Beam

SCALE: NTS (DETAIL #)

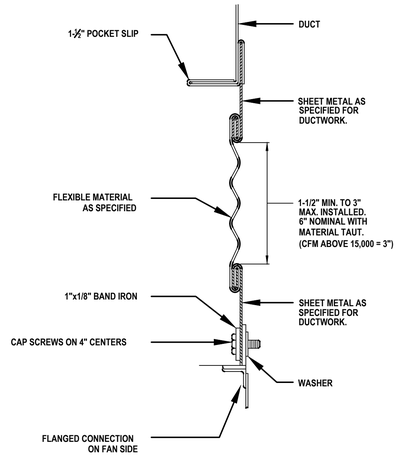

2 Flexible Duct Connection Detail

SCALE: NTS

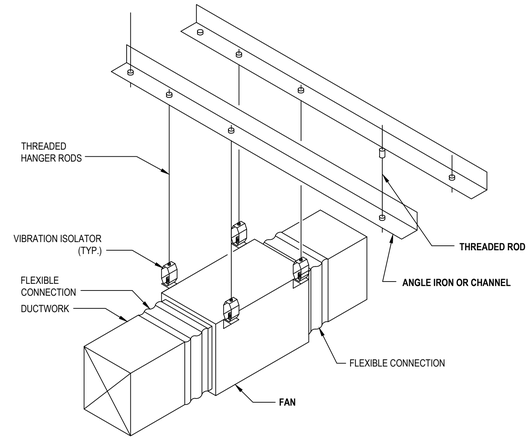

3 Inline Fan Hanging Support Detail

SCALE: NTS

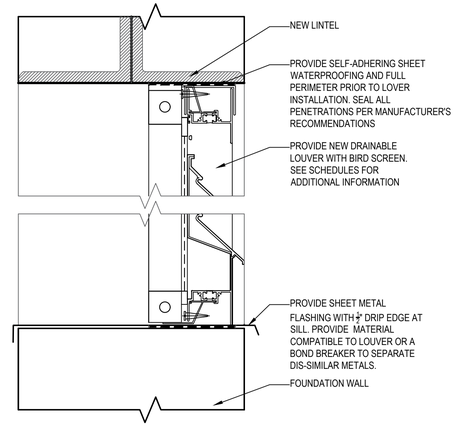

4 Typical Louver Detail

SCALE: NTS

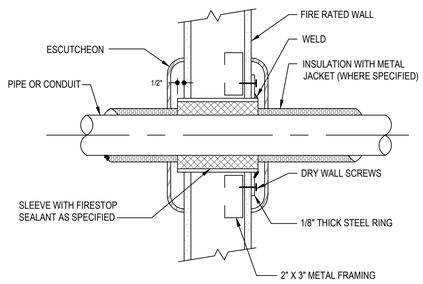

5 Pipe or Conduit Penetration Through Fire Rated Walls

SCALE: NTS (DETAIL #)

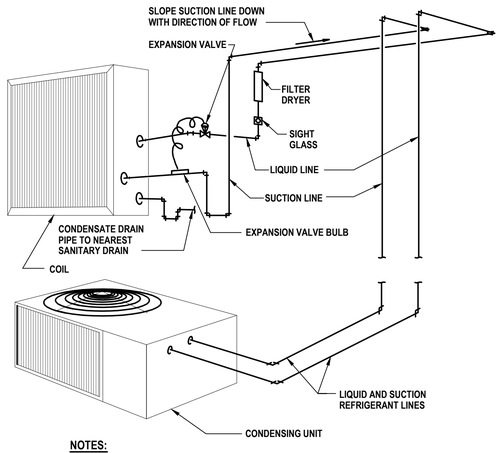

NOTES:

1. CONFORM TO MANUFACTURER'S RECOMMENDATIONS FOR PIPE SIZING AND INSTALLATION.
2. SINGLE CIRCUIT SHOWN, MULTIPLE CIRCUIT INSTALLATIONS SIMILAR.

6 Refrigerant Piping Detail

SCALE: NTS

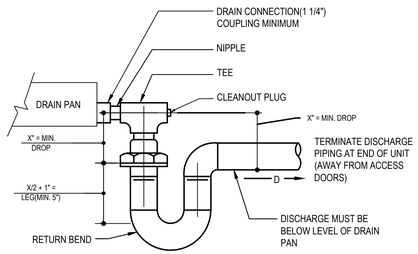

X = NEGATIVE INTERNAL STATIC PRESSURE AT FAN INLET(IN.)

NOTES:

1. ALLOW SUFFICIENT SPACE BELOW DRAIN PAN FOR TRAP.
2. PITCH DRAIN FOR PROPER RUN-OFF.
3. MANUALLY PRIME FILL TRAP BEFORE START-UP TO FORM INITIAL DRAIN SEAL.
4. SUPPORT LENGTHY DRAIN LINES TO PREVENT SAG AND CONDENSATE OVERFLOW.
5. PROVIDE DRAIN SEAL AT EACH AC UNIT.

7 Drain Pan Water Seal Piping Draw-Thru Unit

SCALE: NTS (DETAIL #)

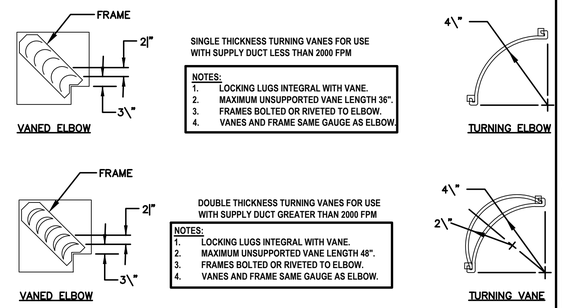

SINGLE THICKNESS TURNING VANES FOR USE WITH SUPPLY DUCT LESS THAN 2000 FPM

NOTES:

1. LOCKING LUGS INTEGRAL WITH VANE.
2. MAXIMUM UNSUPPORTED VANE LENGTH 36".
3. FRAMES BOLTED OR RIVETED TO ELBOW.
4. VANES AND FRAME SAME GAUGE AS ELBOW.

DOUBLE THICKNESS TURNING VANES FOR USE WITH SUPPLY DUCT GREATER THAN 2000 FPM

NOTES:

1. LOCKING LUGS INTEGRAL WITH VANE.
2. MAXIMUM UNSUPPORTED VANE LENGTH 48".
3. FRAMES BOLTED OR RIVETED TO ELBOW.
4. VANES AND FRAME SAME GAUGE AS ELBOW.

8 Turning Vanes For Square Elbows

SCALE: NTS

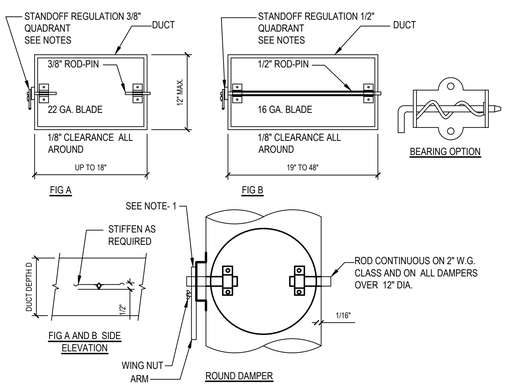

NOTES:

1. PROVIDE 2" HIGH STANDOFF REGULATORS FOR EXTERNALLY INSULATED DUCTWORK. PROVIDE REGULATORS WITH SEALS. DURO-DYNE MODEL E50.
2. STANDOFF BASE HEIGHT TO MATCH INSULATION THICKNESS. BASE CONSTRUCTION 16 GAUGE.
3. RAPIT DAMPER REGULATORS AND JIFFY DAMPERS ARE NOT ACCEPTABLE ON RECTANGULAR OR ROUND DUCTWORK.

9 Volume Dampers - Single Blade Type

SCALE: NTS (DETAIL #)

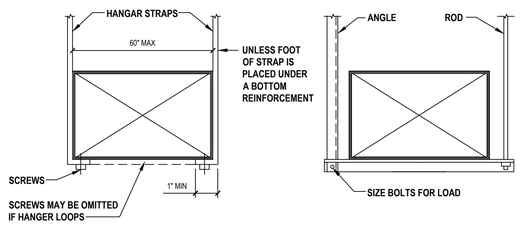

NOTES:

1. SIZE ALL SUPPORTS IN ACCORDANCE WITH THE SMACNA DUCT CONSTRUCTION STANDARDS, LATEST EDITION.

10 Hanger Detail

SCALE: NTS

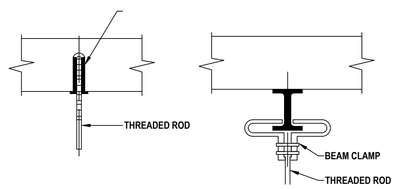

11 PIPE HANGER SUPPORT DETAIL

SCALE: NTS

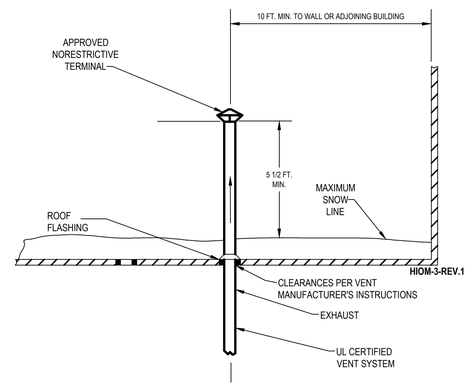

12 Vertical Venting for Direct Vent System

SCALE: NTS

H2M architects + engineers

538 Broad Hollow Road, 4th Floor East
Melville, NY 11747
631.756.8000 • www.h2m.com

CONSULTANTS:

MARK	DATE	DESCRIPTION

STATE OF NEW YORK · JOHN LAHEY · 101303 · LICENSED PROFESSIONAL ENGINEER

"ALTERATION OF THIS DOCUMENT EXCEPT BY A LICENSED PROFESSIONAL IS ILLEGAL"

DESIGNED BY:	DRAWN BY:	CHECKED BY:	REVIEWED BY:
MJV	MJV	MJV	JML

PROJECT No.:	DATE:	SCALE:
VGFD2001	JULY 2022	AS SHOWN

CLIENT

VAILS GATE FIRE DISTRICT

New Storage Building (Phase I)
New Fire Station (Phase II)

872 Blooming Grove Turnpike
New Windsor, NY 12553

CONTRACT

CONTRACT G
GENERAL CONSTRUCTION

STATUS

FINAL BID DOCUMENT

SHEET TITLE

MECHANICAL DETAILS SHEET

DRAWING No.

M1 510.00

X:\VGFD\Vails Gate Fire Dept\VGFD2001-(Vails Gate FD New Firehouse)\02-BIM-CADD\Cmc-docs\mech_Storage Building\M 510.00 - Mechanical Details.dwg Last Modified: May 09, 2022 - 10:39am Plotted on: Jul 15, 2022 - 1:07pm By dragone

EXHAUST FANS

FAN NO.	SYSTEM SERVED	PERFORMANCE/CONSTRUCTION REQUIREMENTS: CFM	EXT S. P. (IN. W.C.)	FAN/MOTOR RPM	BHP	BASIS OF DESIGN INFORMATION: MNF	MODEL NO.	NOMINAL DIMENSION (DIA" x H") (L" x W" x H")	WEIGHT (LBS.)	ELECTRICAL DATA: VOLTS /PHASE	MOTOR HP	REMARKS
GXF-SB-1	APPARATUS BAY	3,000	1.0	1,725	0.98	GREENHECK	SQ-160-VG	29 x 26 x 26	163	208/1	2	1,3,4,6,7,8
GXF-SB-2	APPARATUS BAY	200	0.1	1,725	0.01	GREENHECK	SQ-80-VG	19 x 15 x 15	49	115/1	1/10	1,2,6,11
TXF-SB-1	BATHROOM	80	0.1	900	18W	GREENHECK	SP-B80	15 x 14 x 7	9	115/1	18W	1,7,10
VXF-SB-1	VEHICLE EXHAUST	-	-	-	-	-	-	-	-	240/3	10	1,5,9

NOTES:
1. MANUFACTURER PROVIDED DISCONNECT SWITCH.
2. PROVIDE WITH 115VAC MOTORIZED DAMPER WITH END SWITCH AND END SEALS.
3. PROVIDE WITH 208-230VAC MOTORIZED DAMPER WITH END SWITCH AND END SEALS.
4. FAN TO OPERATE BASED ON SIGNALS FROM INTERLOCKED TEMPERATURE SENSOR OR GAS DETECTIONS SYSTEM OR 30-MINUTE SPRING TIMER.
5. ELECTRICAL CONTRACTOR TO PROVIDE WITH HOA SWITCH
6. PROVIDE WITH DIAL FOR BALANCING ONLY
7. ELECTRICAL CONTRACTOR TO PROVIDE TIME CLOCK AND SPRING TIMER
8. MANUFACTURER TO PROVIDE THERMOSTAT
9. VXF FOR INFORMATION ONLY. FAN TO BE RELOCATED FROM EXISTING FIREHOUSE BY OTHERS. VENDOR TO PROVIDE CONTROLS.
10. PROVIDE WITH GRAVITY BACKDRAFT DAMPER.
11. FAN TO RUN 24/7.

MOTORIZED DAMPERS

EQMT. TAG	PERFORMANCE/CONSTRUCTION REQUIREMENTS: CFM	EXT S. P. (IN. W.C.)	FACE VELOCITY (FPM)	FRAME THICKNESS	FAILURE MODE	BASIS OF DESIGN INFORMATION: MNF	MODEL NO.	ACTUATOR MNF	ACTUATOR MODEL NO.	ACTUATOR COUNT	ELECTRICAL DATA: VOLTAGE	POWER DRAW (W)	REMARKS
MD-SB-1	3,000	0.116	1,000	16 GAUGE	CLOSED	GREENHECK	VCD-23	HONEYWELL	MS4104F1010	1	208/1	18	1,2,3
MD-SB-2	200	0.068	675	16 GAUGE	CLOSED	GREENHECK	VCD-23	HONEYWELL	MS4104F1010	1	115/1	18	1,2,4
MD-SB-3	1000	0.068	675	16 GAUGE	CLOSED	GREENHECK	VCD-23	HONEYWELL	MS4104F1010	1	115/1	18	1,2,3
MD-SB-4	1000	0.068	675	16 GAUGE	CLOSED	GREENHECK	VCD-23	HONEYWELL	MS4104F1010	1	115/1	18	1,2,3
MD-SB-5	1000	0.068	675	16 GAUGE	CLOSED	GREENHECK	VCD-23	HONEYWELL	MS4104F1010	1	115/1	18	1,2,3

NOTES:
1. TWO POSITION W/ SPRING RETURN.
2. PROVIDE WITH STANDARD SLEEVE.
3. INTERLOCK WITH GXF-1.
4. INTERLOCK WITH GXF-2.
5. INTERLOCK WITH VXF-1.

VENTILATION INDEX BASED ON 2020 NEW YORK STATE MECHANICAL CODE

ROOM NAME	SERVED BY	OCCUPANCY CLASSIFICATION	FLOOR AREA (SF)	OCCUPANCY LOAD (PERSONS/1000 SF)	NUMBER OF OCCUPANTS	OCCUPANT BASED OA RATE (CFM/OCCUPANT)	AREA BASED OUTSIDE AIR RATE (CFM/SF)	EXHAUST RATE (CFM/SF)	Ez EFFICIENCY FACTOR (HEATING)	UNCORRECTED OA REQUIRED (CFM)	CORRECTED OA [HEATING] (CFM)	EXHAUST REQUIRED (CFM)	NOTES
APPARATUS BAY	GXF-SB-1	GARAGE	2650	N/A	N/A	N/A	0.00	0.75	1.0	N/A	N/A	1988	
MEZZANINE STORAGE	GXF-SB-1	GARAGE	750	N/A	N/A	N/A	0.00	0.75	1.0	N/A	N/A	563	
OFFICE	-	OFFICE	143	5	2	5	0.06	0.00	0.8	19	24	N/A	NATURAL VENTILATION

AIR INLETS & OUTLETS

SYMBOL	BASIS OF DESIGN: MNF/ MODEL NO.	TYPE	FACE SIZE (IN)	AIR FLOW RANGE (CFM)	NECK SIZE DIAMETER (IN.)	NOTES
EG-SB-A (CFM)	TITUS 350RL	SIDEWALL EXHAUST GRILLE	16" x 10"	300-500	-	1,2

NOTES:
1. PROVIDE VOLUME DAMPERS FOR ALL INLETS AND OUTLETS.
2. COORDINATE ALL COLORS WITH ARCH.

REFRIGERANT DENSITY CALCS

SYSTEM	EFFECTIVE PIPE LENGTH (FT.)	EFFECTIVE FURTHEST PIPE RUN (FT.)	TOTAL # OF ELBOWS	TOTAL REFR. (LBS)	ZONE SMALLEST SPACE, TOTAL AREA (SQFT.)	ZONE SMALLEST SPACE, TOTAL VOLUME (FT³)	REFRIGERANT DENSITY (LB/1000FT³)
ACCU-SB-1	50	50	0	2.6	143	1,144	2.27

NOTES:
1. REFRIGERANT LINE LENGTHS, SIZES & CHARGES TO BE VERIFIED BY EQUIPMENT MANUFACTURER.
2. CONTRACTOR TO NOTIFY ENGINEER IF ADDITIONAL SYSTEM CHARGE IS REQUIRED.

CONDENSING UNITS

EQMT NO.	LOCATION	INDOOR UNITS SERVED	PERFORMANCE/ CONSTRUCTION REQUIREMENTS: SEER	EER	REFRIGERANT	REMOTE CONDENSING UNIT COOLING PERFORMANCE: TOTAL CAPACITY (MBH)	MIN OPER. TEMP. (°F)	MAX OPER. TEMP. (°F)	BASIS OF DESIGN INFORMATION: MNF	MODEL NO.	NOMINAL DIMENSIONS L x W x H (IN.)	NOMINAL OPERATING WEIGHT (LBS.)	ELECTRICAL DATA: VOLTS/ PHASE	MCA	MOCP	NOTES
ACCU-SB-1	EXTERIOR MOUNTED TO BUILDING	AC-1	17	10.98	R410A	9	14	118	LG	LSU090HFV3	10 x 29 x 20	55	208/1	10	15	1-7

NOTES:
1. CONTRACTOR TO PROVIDE MOUNTING TO BUILDING.
2. PROVIDE ALL REFRIGERANT PIPING SPECIALTIES AS PER THE MANUFACTURER'S INSTALLATION INSTRUCTIONS.
3. CONTRACTOR TO PROVIDE DISCONNECT SWITCH FOR OUTDOOR UNIT.
4. PROVIDE REFRIGERANT PIPING W/ INSULATION BETWEEN CONDENSER AS PER THE NEW YORK STATE ENERGY CODE.
5. MANUFACTURER TO PROVIDE BUILT-IN BASE PAN HEATER
6. MANUFACTURER TO PROVIDE BACNET CARD.
7. CONDENSING UNIT SHALL POWER EVAPORATOR UNIT.

SPLIT EVAPORATING UNITS

UNIT TAG	UNIT LOCATION	TYPE	SERVED BY	PERFORMANCE/ CONSTRUCTION REQUIREMENTS: REFRIGERANT	SUPPLY UNIT DATA: DRY AIRFLOW (CFM) [HI-MED-LO]	EXTERNAL STATIC (IN. W.C.) [HI TO LO]	FAN POWER (A)	SOUND LEVEL LOW TO HIGH dB(A)	NOMINAL SIZE (MBH)	TOTAL COOLING CAPACITY (MBH)	HEATING CAPACITY AT 19F (MBH)	BASIS OF DESIGN INFORMATION: MANUF.	MODEL	NOMINAL DIMENSIONS L" x W" x H"	NOMINAL OPERATING WEIGHT (LBS.)	LIQUID - GAS CONNECTIONS (IN. OD)	CONDENSATE CONNECTION (IN. ID)	NOTES
AC-SB-1	OFFICE	WALL MOUNTED	ACCU-1	R410A	353/264/148	0.20	0.4	28/36/42	9	9.0	8.8	LG	LSN090HFV3	33 x 6 x 12	20.0	1/4 - 3/8	1	1-4

NOTES:
1. MANUFACTURER TO PROVIDE HARDWIRED, WALL MOUNTED, PROGRAMMABLE THERMOSTAT. THERMOSTAT SETPOINT TO BE SET TO 75°F (ADJUSTABLE BY END USER)
2. DRAIN PAN LEVEL SENSOR MODEL SS610E. THE UNIT SHALL TURN OFF IF WATER IS SENSED.
3. INSTALL ALL EQUIPMENT AND COMPONENTS ACCORDING TO MANUFACTURER'S INSTRUCTIONS.
4. POWERED BY PAIRED CONDENSER, PROVIDE DISCONNECT SWITCH MODEL TAZ-MS303 BETWEEN INDOOR AND OUTDOOR UNIT.

RADIANT HEATERS

EQUIPMENT NO.	LOCATION	CONFIGURATION	FAN DATA: CURRENT	VOLTS/ PHASE	TOTAL CAPACITY (MBH)	HEATING DATA – NATURAL GAS: INPUT CFH	MIN. PRESSURE (WC)	MAX. PRESSURE (WC)	BASIS OF DESIGN INFORMATION: MNF	MODEL NO.	NOMINAL DIMENSIONS L x W x H	NOMINAL OPERATING WEIGHT (LBS.)	REMARKS
GFRH-SB-1,2,3	SEE PLAN	CEILING HUNG	1.8A	120/1	80	100	5	14	REZNOR	VPSN80A	VARIES x 16 x 16	APPRX 60	1-6

NOTES:
1. REMOTE WALL MOUNTED THERMOSTAT.
2. UNIT MOUNTED DISCONNECT SWITCH.
3. ELECTRONIC PROGRAM START UP WITH SPARK IGNITION.
4. OPERATION INDICATOR LIGHTS
5. FLUE SHALL HAVE MAXIMUM 2 ELBOWS.
6. INTERLOCK WITH BAY DOORS. IF ONE DOOR IS OPEN, HEATERS SHALL TURN OFF UNTIL ALL DOORS ARE PROVEN CLOSED.

HIGH VOLUME LOW SPEED FANS

FAN NO.	AREA SERVED	PERFORMANCE REQUIREMENTS: FAN/MOTOR RPM	BASIS OF DESIGN INFORMATION: MNF	MODEL NO.	NOMINAL DIMENSIONS (DIA" x H")	WEIGHT (LBS.)	ELECTRICAL DATA: VOLTS / PHASE	MOTOR POWER	FAN POWER	REMARKS
HVLS-SB-1	APPARATUS BAY	107	GREENHECK	DC-5-8-13LV	96 x 27	86	115V / 1	175W	68W	1-3
HVLS-SB-2,3	APPARATUS BAY	85	GREENHECK	DC-5-4-3LV	52 x 39	30	115V / 1	50W	6W	1-3

NOTES:
1. MANUFACTURER PROVIDED WALL MOUNTED CONTROLLER, FS1.
2. ELECTRICAL CONTRACTOR TO PROVIDE DISCONNECT SWITCH
3. PROVIDE SUPPLEMENTAL STEEL AS REQUIRED TO MOUNT FAN.

LOUVERS

EQUIPMENT NO.	LOCATION	SYSTEM SERVED	PERFORMANCE/CONSTRUCTION REQUIREMENTS: MAX AIR FLOW RATE (CFM)	MAX. PD (IN. W.C.)	FREE AREA (SQ. FT.)	OVERALL NOMINAL SIZE W X H	SERVICE	BASIS OF DESIGN INFORMATION: MNF	MODEL NO.	REMARKS
LV-SB-1	SEE PLAN	GXF-1	3000	0.02	4	48" X 24"	EXHAUST	GREENHECK	ESD-435	1-3
LV-SB-2	SEE PLAN	GXF-1	1000	0.02	2	24" X 12"	INTAKE	GREENHECK	ESD-435	1-3
LV-SB-3	SEE PLAN	GXF-1	1000	0.02	2	24" X 12"	INTAKE	GREENHECK	ESD-435	1-3
LV-SB-4	SEE PLAN	GXF-1	1000	0.02	2	24" X 12"	INTAKE	GREENHECK	ESD-435	1-3
LV-SB-5	SEE PLAN	VXF-1	TBD	0.02	4	48" X 24"	EXHAUST	GREENHECK	ESD-435	1-4

NOTES:
1. PROVIDE 12" SLEEVE
2. COORDINATE COLOR WITH ARCHITECT AND OWNER. PROVIDE COLOR SAMPLES
3. PROVIDE INTERNAL BIRD SCREEN
4. LOUVER FOR VEHICLE EXHAUST SHALL BE COORDINATED WITH VEHICLE EXHAUST CONTRACTOR. SIZE IS FOR REFERENCE ONLY.

GAS DETECTION SYSTEM

EQMT. NO.	LOCATION	SYSTEM SERVED	BASIS OF DESIGN INFORMATION: MNF	MODEL NO.	NOMINAL DIMENSIONS L" x W" x H"	VOLTAGE / PHASE	REMARKS
GDS-SB-1	APPARATUS BAY	GXF-1	SIERRA MONITORING COMPANY	5100-04-IT	7.9"X5.7"X 3.9"	24	1 - 7

NOTES:
1. INCLUDE DIGITAL CONTROLLER IN NEMA 4 ENCLOSURE FOR WALL MOUNT.
2. LED DISPLAY FOR NO2 AND CO.
3. INCLUDE NITROGEN DIOXIDE SENSORS AND CARBON MONOXIDE SENSORS.
4. PROVIDE CONFIGURABLE ALARM OUTPUTS WITH ISOLATION RELAYS FOR INTERLOCK WITH FANS AND FACP.
5. PROVIDE PANEL MOUNTED AUDIBLE ALARM AND SILENCING SWITCH
6. PROVIDE ALARM HORN WITH STROBE.
7. PROVIDE STARTUP, TEST AND CALIBRATION REPORT

ELECTRIC UNIT HEATERS

EQUIPMENT NO.	LOCATION	CONFIGURATION	FAN DATA: FLOW (CFM)	AMPS	VOLTS/ PHASE	TOTAL CAPACITY (MBH)	ELECTRIC COIL CAPACITY (W)	AIR DATA: ENT. DB TEMP. (DEG. F)	LVG. DB TEMP. (DEG. F)	BASIS OF DESIGN INFORMATION: MNF	MODEL NO.	NOMINAL DIMENSIONS L x W x H	REMARKS
WMH-SB-1	STORAGE AND BATHROOM	RECESSED CABINET	160	-	120	5.1	1500	55	108	STELPRO	AWF1501T	5 1/2" x 16 3/8" x 23 1/8"	1,2

NOTES:
1. MANUFACTURER TO PROVIDE UNIT MOUNTED THERMOSTAT.
2. ELECTRICAL CONTRACTOR TO PROVIDE UNIT MOUNTED DISCONNECT SWITCH.

H2M architects + engineers
538 Broad Hollow Road, 4th Floor East
Melville, NY 11747
631.756.8000 ▪ www.h2m.com

CONSULTANTS:

MARK	DATE	DESCRIPTION

STATE OF NEW YORK · JOHN LAHEY · 101303 · LICENSED PROFESSIONAL ENGINEER

"ALTERATION OF THIS DOCUMENT EXCEPT BY A LICENSED PROFESSIONAL IS ILLEGAL"

DESIGNED BY: MJV | DRAWN BY: MJV | CHECKED BY: MJV | REVIEWED BY: JML

PROJECT No.: VGFD2001 | DATE: JULY 2022 | SCALE: AS SHOWN

CLIENT
VAILS GATE FIRE DISTRICT

New Storage Building (Phase I)
New Fire Station (Phase II)

872 Blooming Grove Turnpike
New Windsor, NY 12553

CONTRACT
CONTRACT G
GENERAL CONSTRUCTION

STATUS
FINAL BID DOCUMENT

SHEET TITLE
MECHANICAL SCHEDULE SHEET

DRAWING No.
M1 610.00

X:\VGFD (Vails Gate Fire Dept)\VGFD2001-(Vails Gate FD-New Firehouse)\02-BIM-CADD\Con-docs\hvac_Storage Building\M-610.00 - Mechanical Schedules.dwg Last Modified: May 06, 2022 - 10:39am Plotted on: Jul 15, 2022 - 1:07pm By dragone

" VIBRATION ISOLATION / SEISMIC & WIND RESTRAINTS SCHEDULE (VIBRO-ACOUSTICS)
2020 New York State Building Code, SDC = C, RISK CAT = IV"

UNIT TAG	EQUIPMENT TYPE	"LOCATION (IN LEVEL)"	MOUNTING METHOD	BASE TYPE	ISOLATOR TYPE	NOM. DEFL., IN.	RESTRAINT REQ'D	SEISMIC COMPONENT IMPORTANCE FACTOR, Ip	NOTES (1,2,
DUCTWORK (≥ 6' CLEAR AREA)	DUCTWORK	VARIOUS	SUSPENDED	---			SEIS	1.5	
HVAC PIPING (>2" NOMINAL DIAMETER)	PIPING	VARIOUS	SUSPENDED	---			SEIS	1.5	
GXF-SB-1, 2	EXHAUST FAN	APPARATUS BAY	SUSPENDED	---	SHR	2.00	SEIS	1.5	6,7
VXF-SB-1	VEHICLE EXHAUST	MECH MEZ	SUSPENDED	---	SHR	2.00	SEIS	1.5	6,7
ACCU-SB-1	CONDENSING UNIT	EXTERIOR MOUNTED TO BUILDING	WALL	---	NP	0.18	SEIS	1.5	3
GFRH-SB-1,2,3	RADIANT HEATERS	STORAGE	SUSPENDED	---	---	---	SEIS	1.5	6
HVLS	HVL FANS	VARIOUS	SUSPENDED	---	---	---	SEIS	1.5	6

NOTES:

1. BASIS OF DESIGN: VIBRO-ACOUSTICS.
2. SEISMICALLY RATED FOR PROJECT CONDITIONS.
3. STAND SUPPORT MUST BE ABLE TO MEET CALCULATED SEISMIC LOADS
4. PROVIDE FLEXIBLE PIPING CONNECTORS
5. PROVIDE TYPE SHR OR SFS ISOLATORS ON ADJACENT PIPING/DUCTWORK
6. PROVIDE SEISMIC RESTRAINT CABLES. PROVIDE ROD STIFFENERS AS REQUIRED.
7. PROVIDE SEISMIC UPLIFT STOP WASHER.
8. SUPPORT INLINE PUMP AT FLANGE CONNECTION.

BASE TYPE:

CIB - CONCRETE INERTIA BASE
VCR - ADJUSTABLE SPRING CURB
RC: ROOF CURB

ISOLATOR TYPE:

NP - RUBBER PAD
SIPS - SEISMIC INLINE PUMP STANDS
SFS - SEISMIC FLOOR MOUNT
SHR - SPRING + RUBBER HANGER

H2M architects + engineers

538 Broad Hollow Road, 4th Floor East
Melville, NY 11747
631.756.8000 • www.h2m.com

CONSULTANTS:

MARK	DATE	DESCRIPTION
2	12/22/2022	REVS. PER TOWN COMMENTS

STATE OF NEW YORK · JOHN LAHEY · 101283 · LICENSED PROFESSIONAL ENGINEER

"ALTERATION OF THIS DOCUMENT EXCEPT BY A LICENSED PROFESSIONAL IS ILLEGAL"

DESIGNED BY:	DRAWN BY:	CHECKED BY:	REVIEWED BY:
MJV	MJV	MJV	JML

PROJECT No.:	DATE:	SCALE:
VGFD2001	JULY 2022	AS SHOWN

CLIENT

VAILS GATE FIRE DISTRICT

New Storage Building (Phase I)
New Fire Station (Phase II)

872 Blooming Grove Turnpike
New Windsor, NY 12553

CONTRACT

CONTRACT G
GENERAL CONSTRUCTION

STATUS

FINAL BID DOCUMENT

SHEET TITLE

MECHANICAL SCHEDULE SHEET

DRAWING No.

M1 611.02

C:\Users\mvitrano\AppData\Local\Temp\AcPublish_16088\M-610.00 - Mechanical Schedules.dwg Last Modified: Dec 22, 2022 - 3:23pm Plotted on: Dec 22, 2022 - 3:41pm By: mvitrano

ELECTRICAL LEGENDS

SYMBOL	DESCRIPTION	COMMENTS
S_3	THREE - WAY SWITCH	46" AFF TO CL UON
S_4	FOUR - WAY SWITCH	46" AFF TO CL UON
S_4	ILLUMINATED SWITCH	46" AFF TO CL UON
S^A	SINGLE POLE SWITCH; "A" INDICATES SWITCH CONTROL	46" AFF TO CL UON
S_D	SINGLE POLE DIMMER SWITCH	46" AFF TO CL UON
S_{3D}	THREE - WAY DIMMER SWITCH	46" AFF TO CL UON
S_K	SINGLE POLE KEYED SWITCH	46" AFF TO CL UON
S_{K3}	KEYED THREE - WAY SWITCH	46" AFF TO CL UON
S_{K4}	KEYED FOUR - WAY SWITCH	46" AFF TO CL UON
S_P	SWITCH AND PILOT LIGHT	
S_T	SWITCH WITH THERMAL OVERLOAD PROTECTION (CONTRACTOR SHALL COORDINATE VOLTAGE AND PHASE WITH EQUIPMENT)	
$S_{OS/VS}$	OCCUPANCY/VACANCY SENSOR WITH MANUAL OVERRIDE, WALL MOUNT	
TC	TIME CLOCK	
E,G	EMERGENCY SHUT OFF SWITCH; 'E' INDICATES ELECTRICAL; 'G' INDICATES GAS	
	2 #12 AWG + #12 AWG GND IN 3/4" E.C. CONCEALED IN WALL OR CEILING	
	3 #12 AWG + #12 AWG GND IN 3/4" E.C. CONCEALED IN OR BELOW SLAB	
LP1-35	DEDICATED HOME RUN TO PANEL LP1 FOR CIRCUIT NO. 35 ONLY. 2 #12 AWG + #12 AWG GND IN 3/4" E.C. CONCEALED IN WALL OR CEILING	
	SIMPLEX RECEPTACLE: 120V, 20A. COORDINATE MOUNTING HEIGHT WITH MECHANICAL CONTRACTOR TO CLEAR BASEBOARDS.	FLUSH
	DUPLEX RECEPTACLE: 120V, 20A. COORDINATE MOUNTING HEIGHT WITH MECHANICAL CONTRACTOR TO CLEAR BASEBOARDS.	FLUSH
	QUAD RECEPTACLE, DOUBLE DUPLEX RECEPTACLE: 120V, 20A. COORDINATE MOUNTING HEIGHT WITH MECHANICAL CONTRACTOR TO CLEAR BASEBOARDS.	FLUSH
C	DUPLEX RECEPTACLE: 120V, 20A; SUBSCRIPT "C" INDICATES CEILING MOUNT.	FLUSH
	DUPLEX RECEPTACLE: 120V, 20A; FLOOR MOUNTED.	FLUSH
	QUAD RECEPTACLE: 120V, 20A; FLOOR MOUNTED.	
D/T	DUPLEX RECEPTACLE AND DATA JACK: 120V, 20A; FLOOR MOUNTED.	
D/T	DATA JACK; FLOOR MOUNTED.	
IG	ISOLATED GROUND DUPLEX RECEPTACLE. COORDINATE MOUNTING HEIGHT WITH MECHANICAL CONTRACTOR TO CLEAR BASEBOARDS.	FLUSH
GFI	DUPLEX RECEPTACLE: 120V, 20A; WITH GROUND FAULT INDICATOR. COORDINATE MOUNTING HEIGHT WITH MECHANICAL CONTRACTOR TO CLEAR BASEBOARDS.	FLUSH
UC	DUPLEX RECEPTACLE: 120V, 20A; SUBSCRIPT "UC" INDICATES UNDER COUNTER	AS PER ENGINEER
CT	DUPLEX RECEPTACLE: 120V, 20A; SUBSCRIPT "CT" INDICATES COUNTER TOP.	AS PER ENGINEER
WP	DUPLEX RECEPTACLE: 120V, 20A; SUBSCRIPT "WP" INDICATED WEATHER PROOF.	AS PER ENGINEER
USB	DUPLEX RECEPTACLE: 120V, 20A; SUBSCRIPT "USB" INDICATES INTEGRAL USB.	FLUSH
40 240	SPECIAL PURPOSE OUTLET: 240V, 40A. VERIFY NEMA CONFIGURATION WITH EQUIPMENT MANUFACTURER.	AS PER ENGINEER
TL	TWISTED LOCK RECEPTACLE: 125V, 20A, 3 WIRE; UNLESS OTHERWISE NOTED.	AS PER ENGINEER
	SURFACE RACEWAY WITH 2 GROUNDED AND ISOLATED TYPE DUPLEX RECEPTACLES AND 1 DATA OUTLET PER POSITION, 18" AFF UNLESS OTHERWISE NOTED.	
S1	MAGNETIC STARTER "S1"; SEE STARTER SCHEDULE	
DS1	DISCONNECTION SWITCH "DS1"; SEE DISCONNECT SWITCH SCHEDULE.	
J	JUNCTION BOX.	
4X	NEMA 4X STAINLESS STEEL JUNCTION BOX WITH GASKET COVER.	
S	JUNCTION BOX RECESSED IN WALL WITH BLANK COVER. PROVIDE 3/4" E.C. AND DRAG LINE TO ABOVE FINISHED CEILING. MOUNT 18" AFF, UNLESS OTHERWISE NOTED.	
M	FOR MONITOR, JUNCTION BOX RECESSED IN WALL WITH BLANK COVER. PROVIDE 3/4" E.C. AND DRAG LINE TO ABOVE FINISHED CEILING.	
HD	FOR HAND DRYER, JUNCTION BOX RECESSED IN WALL WITH BLANK COVER. PROVIDE 3/4" E.C. AND DRAG LINE TO ABOVE FINISHED CEILING. COORDINATE MOUNTING HEIGHT WITH ARCHITECT.	
T1	TRANSFORMER "T1"; SEE TRANSFORMER SCHEDULE.	
P1	ELECTRICAL PANEL "P1", RECESSED; SEE PANEL SCHEDULE.	
P1	ELECTRICAL PANEL "P1", SURFACE MOUNT; SEE PANEL SCHEDULE.	
	CONDUIT GOING UP.	
	CONDUIT GOING DOWN.	
T	TELEPHONE. PROVIDE CAT-6 CABLE IN 3/4" E.C. TO UTILITY ROOM (105) WITH J. BOX RECESSED IN WALL WITH RJ-11 COVER.	
TV	CABLE TELEVISION. PROVIDE COAXIAL CABLE IN 3/4" E.C. TO UTILITY ROOM (105) WITH J. BOX RECESSED IN WALL WITH COAXIAL COVER.	
D	DATA. PROVIDE CAT-6 CABLE IN 3/4" E.C. TO UTILITY ROOM (105) WITH J. BOX RECESSED IN WALL WITH RJ-45 COVER.	
D/T	COMBINED DATA AND TV. PROVIDE (2) TWO CAT-6 CABLES IN 3/4" E.C. TO UTILITY ROOM (105) WITH J. BOX RECESSED IN WALL WITH RJ-45/RJ-11 COVER.	
S	SECURITY CAMERA. PROVIDE 3/4" E.C. WITH DRAG LINE TO THE OFFICE AND EMPTY J. BOX RECESSED IN WALL WITH BLANK COVER.	

ABBREVIATION	DESCRIPTION	COMMENTS
AFF	ABOVE FINISHED FLOOR	
AFC	ABOVE FINISHED CEILING	
AFCI	ARC FAULT CIRCUIT INTERRUPTER	
AFG	ABOVE FINISHED GRADE	
AHJ	AUTHORITY HAVING JURISDICTION	
AMP, A	AMPERE	
ATS	AUTOMATIC TRANSFER SWITCH; SEE TRANSFER SWITCH SCHEDULE	
AWG	AMERICAN WIRE GAUGE	
BFC	BELOW FINISHED CEILING	
CL	CENTERLINE	
CT	COUNTER TOP	
EC	ELECTRICAL CONDUIT	
GFCI	GROUND FAULT CIRCUIT INTERRUPTER	
GFI	GROUND FAULT INDICATOR	
GND	GROUND	
CH	CENTRAL HUDSON (ELECTRIC UTILITY)	
MCB	MAIN CIRCUIT BREAKER	
MLO	MAIN LUGS ONLY	
NTS	NOT TO SCALE	
TYP	TYPICAL	
UON	UNLESS OTHERWISE NOTED	
UC	UNDER COUNTER	
V	VOLT	
VAC	VOLTS ALTERNATING CURRENT	
VDC	VOLTS DIRECT CURRENT	
X-FMR	TRANSFORMER	
WP	WEATHERPROOF	

SINGLE LINE DIAGRAM LEGEND

SYMBOL	DESCRIPTION	COMMENTS
T	LINE VOLTAGE THERMOSTAT, 120V, 10A.	
100AF 100AT	CIRCUIT BREAKER WITH TRIP AND POLES AS NOTED; 100 AMP FRAME, 100 AMP TRIP.	
	TRANSFER SWITCH 'TS1'; SEE TRANSFER SWITCH SCHEDULE.	
M.C.B. 30A/3P PANEL "P1"	DISTRIBUTION PANEL P1 WITH 30A, 2 POLE M.C.B.; SEE DISTRIBUTION PANEL SCHEDULE.	
100AS	UNFUSED DISCONNECT SWITCH DS1, 100 AMP; SEE DISCONNECT SWITCH SCHEDULE.	
DS1 100AS 100AF	FUSED DISCONNECT SWITCH 'DSI', FUSED AT 100 AMP SIZE, 100 AMP FUSED, 3 POLES; SEE DISCONNECT SWITCH SCHEDULE.	
G	GENERATOR SET 'G'	
M	ELECTRIC METER AND METER PAN AS PER CENTRAL HUDSON REQUIREMENTS.	
5HP	MOTOR, NUMBER INDICATES HORSEPOWER.	
CTS	CURRENT TRANSFORMERS.	
PTS	VOLTAGE TRANSFORMERS.	
UPS	UNINTERRUPTIBLE POWER SUPPLY	
120/208V 277/480 T2	TRANSFORMER 'T2' WITH SIZE, PRIMARY AND SECONDARY VOLTAGES AS NOTED.	
100AF 100AT	RACK OUT CIRCUIT BREAKER	
RVRM 10	REDUCED VOLTAGE SOLID STATE RAMPING MODULE, SIZED FOR 10 H.P.	
RVSS 150	REDUCED VOLTAGE SOLID STATE STARTER, SIZED FOR 150 H.P.	
VFD 25	VARIABLE FREQUENCY DRIVE, RATED FOR 25 H.P.	
FVNR 6	FULL VOLTAGE NON-REVERSING STARTER, NEMA SIZE 6	
FVR 5	FULL VOLTAGE REVERSING STARTER, NEMA SIZE 5	
JJS	FAST ACTING SOLID STATE FUSES AS PER MANUFACTURER.	
	MULTIPLE BRANCH CIRCUITS AS REQUIRED.	
	CONTROL CIRCUIT; MIN 2 #12 AWG IN 3/4" E.C.	

LIST OF DRAWINGS

E1 001.00	ELECTRICAL LEGENDS
ES-100.00	ELECTRICAL SITE PLAN (REFER TO PHASE II DWG)
E1 100.00	FIRST FLOOR & MEZZANINE ELECTRICAL LIGHTING AND POWER PLANS
E1 500.00	STORAGE BUILDING ELECTRICAL DETAILS
E1 501.00	STORAGE BUILDING ELECTRICAL DETAILS
E1 502.00	STORAGE BUILDING ELECTRICAL GENERATOR DETAILS
E1 503.00	STORAGE BUILDING ELECTRICAL GENERATOR DETAILS
E1 600.00	STORAGE BUILDING ELECTRICAL SINGLE LINE DIAGRAM

SYMBOLS LEGEND

100	ROOM DESIGNATION
5 A2.2	BUILDING SECTION CUT
5 A2.2	WALL SECTION CUT
5 A2.2	DETAIL KEY
5 A2.2	ELEVATION KEY
H	COLUMN GRID
	ELEVATION LINE
1 Title SCALE:	DRAWING TITLE
4 3 5 A2.2 1 2	INTERIOR ELEVATION REFERENCE
# #	SEE NOTE # ON DWG #

H 2 M architects + engineers

538 Broad Hollow Road, 4th Floor East
Melville, NY 11747
631.756.8000 • www.h2m.com

CONSULTANTS:

MARK	DATE	DESCRIPTION

STATE OF NEW YORK · ANTHONY W. CUMMINGS · 072580 · LICENSED PROFESSIONAL ENGINEER

"ALTERATION OF THIS DOCUMENT EXCEPT BY A LICENSED PROFESSIONAL IS ILLEGAL"

DESIGNED BY:	DRAWN BY:	CHECKED BY:	REVIEWED BY:
SMP	SMP	AWK	AWK
PROJECT No.: VGFD2001	DATE: JULY 2022	SCALE: AS SHOWN	

CLIENT

VAILS GATE FIRE DISTRICT

New Storage Building (Phase I)
New Fire Station (Phase II)

872 Blooming Grove Turnpike
New Windsor, NY 12553

CONTRACT

CONTRACT G
GENERAL CONSTRUCTION

STATUS

FINAL BID DOCUMENT

SHEET TITLE

ELECTRICAL LEGEND
PHASE 1

DRAWING No.

E1 001.00

C:\Users\pgalacios\appdata\local\temp\Acad\-Plotter\ 25304E1 001.00 - Electrical Legend (Storage Building).dwg Last Modified: Jul 07, 2022 - 1:25pm Plotted on: Jul 15, 2022 - 2:48pm By pgalacios

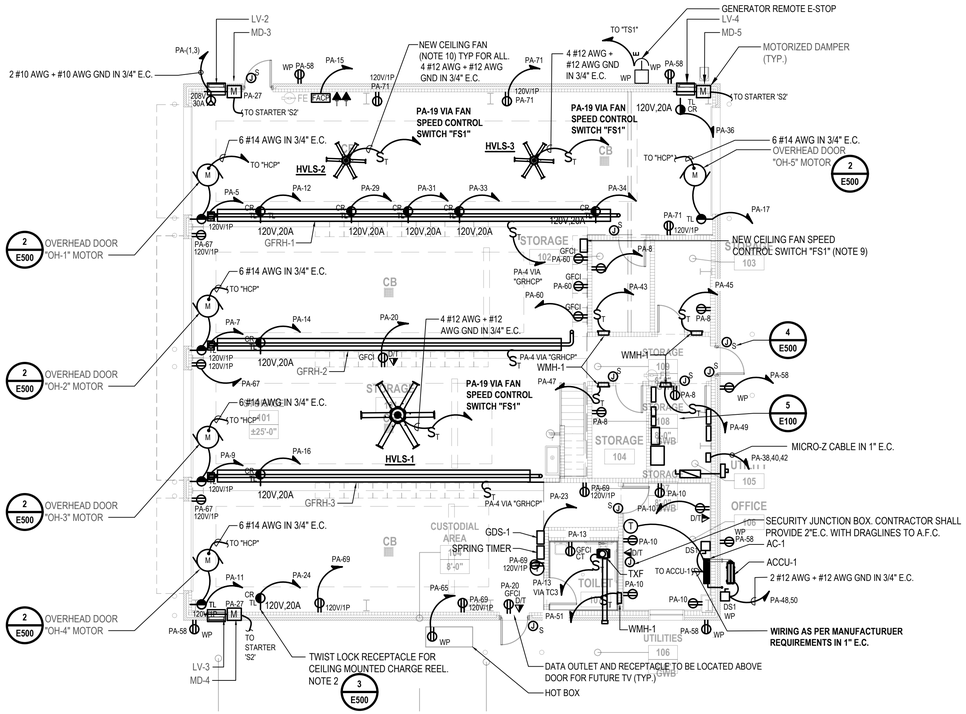

1 Storage Building Power Plan
SCALE: 1/8" = 1'-0"

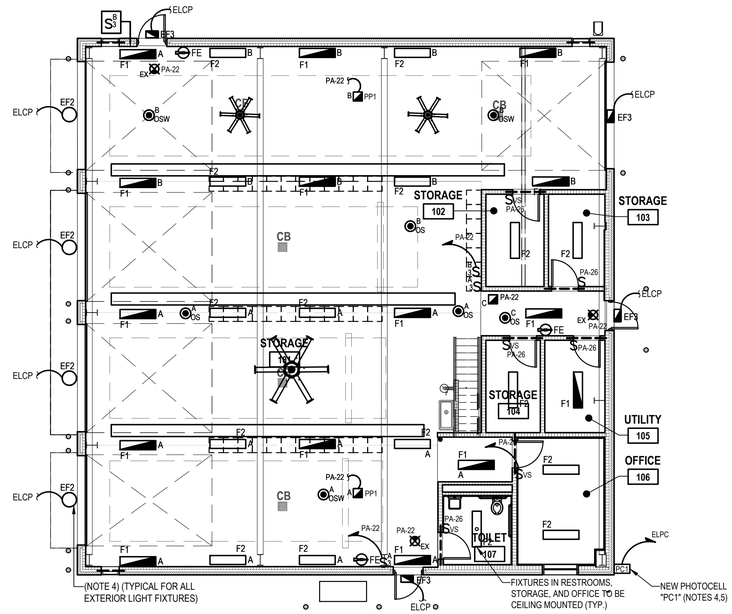

2 Storage Building Lighting Plan
SCALE: 1/8" = 1'-0"

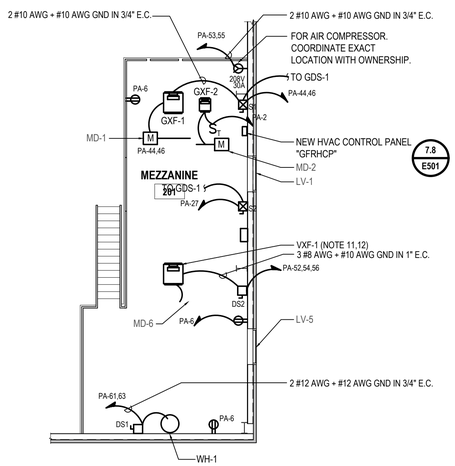

3 Mezzanine Electrical Power Plan
SCALE: 1/8" = 1'-0"

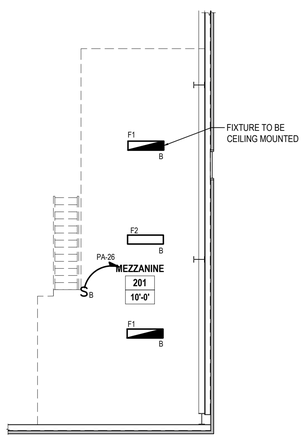

4 Mezzanine Electrical Lighting Plan
SCALE: 1/8" = 1'-0"

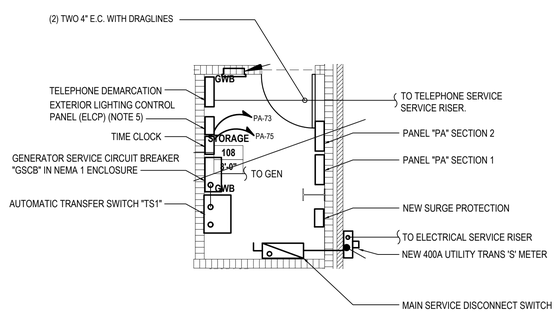

5 Utility Room Equipment Layout
SCALE: 1/4" = 1'-0"

NOTES:

1. ALL RECEPTACLES IN APPARATUS ROOM SHALL BE MOUNTED 46" A.F.F. U.O.N.
2. CONTRACTOR SHALL COORDINATE EXACT MOUNTING LOCATION WITH DISTRICT.
3. CONTRACTOR SHALL PROVIDE AND INSTALL NEW SHUTDOWN CONTROL MODULES, ALL ASSOCIATED RELAYS, WIRING AND CONDUIT AND INTEGRATE IT WITH HVAC EQUIPMENT AND NEW FACP. ALL HVAC EQUIPMENT SHALL BE INTERCONNECTED TO THE FIRE ALARM SYSTEM AND ALL FANS SHALL SHUT DOWN UPON FIRE ALARM SYSTEM ALARM ACTIVATION.
4. EXTERIOR LIGHT FIXTURES SHALL BE CONTROLLED BY EXTERIOR LIGHTING CONTROL PANEL TIME CLOCK "TC1" AND PHOTOCELL "PC1" AS SHOWN ON THIS DRAWING. BOTH THE TIME CLOCK AND THE PHOTOCELL SHALL BE IN THE "ON" POSITION FOR THE EXTERIOR LIGHT FIXTURES TO TURN ON. EXTERIOR LIGHT FIXTURES SHALL BE PROVIDED WITH AN UNSWITCHED FEED AS SHOWN ON THIS DRAWING FOR EMERGENCY BATTERY BACKUP. TIME CLOCK "TC1" SHALL BE TORK (MODEL: EWZ103 OR APPROVED EQUAL). PHOTOCELL "PC1" SHALL BE INTERMATIC (MODEL: K4221C OR APPROVED EQUAL). CONTRACTOR SHALL PROVIDE AND INSTALL UNSWITCHED POWER FEEDS AS REQUIRED TO POWER THE TIME CLOCK AND PHOTOCELL.
5. PHOTOCELL "PC1" SHALL BE MOUNTED ON THE EXTERIOR OF THE BUILDING AT 11'-0" ABOVE FINISHED GRADE. CONTRACTOR SHALL LOCATE PHOTOCELL SO IT IS NOT ACTIVATED BY THE ADJACENT LIGHT FIXTURE.
6. CONTRACTOR SHALL NOTE THAT THE INTERIOR OF THE BUILDING IS UNFINISHED. CONTRACTOR SHALL PROVIDE AND INSTALL CHANNEL SUPPORT SYSTEMS AS REQUIRED TO SUPPORT ALL EQUIPMENT FROM THE BUILDING STRUCTURE AND TO INSTALL ALL EQUIPMENT AT THE LOCATIONS SHOWN ON THIS DRAWING. CONTRACTOR SHALL PROVIDE AND INSTALL ALL MOUNTING HARDWARE AND ACCESSORIES AS REQUIRED.
7. REFER TO REFER TO DRAWING E600.00 FOR ELECTRICAL PANEL SCHEDULES. REFER TO DRAWING E600.00 FOR LIGHTING FIXTURE SCHEDULE. REFER TO DRAWING FA001.00 FOR FIRE ALARM RISER AND NOTES.
8. CONTRACTOR SHALL TERMINATE NEW POWER FEED TO GAS DETECTION SYSTEM AS PER MANUFACTURER'S RECOMMENDATIONS. CONTRACTOR SHALL PROVIDE AND INSTALL A POWER FEED (HARD WIRE) AS REQUIRED TO CONNECT THE GAS DETECTION SYSTEM POWER SUPPLY TO THE NEW POWER FEED. CONTRACTOR SHALL PROVIDE AND INSTALL ALL MOUNTING HARDWARE AND ACCESSORIES AS REQUIRED.
9. MECHANICAL CONTRACTOR SHALL PROVIDE AND INSTALL A WALL MOUNTED FAN SPEED CONTROL SWITCH COMPATIBLE WITH THE CEILING FAN SCHEDULED TO BE INSTALLED PER THE CEILING FAN MANUFACTURER'S RECOMMENDATIONS. CONTRACTOR SHALL FEED NEW CEILING FAN VIA NEW FAN SPEED CONTROL SWITCH. CONTRACTOR SHALL PROVIDE AND INSTALL ALL WIRE CONDUIT AND ACCESSORIES REQUIRED TO CONTROL THE FAN AS PER THE MANUFACTURER'S RECOMMENDATIONS.
10. REFER TO ARCHITECTURAL DRAWINGS FOR MODEL NUMBER OF CEILING FAN TO BE PROVIDED AND INSTALLED. SUPPORT CEILING FAN FROM BUILDING STRUCTURE PER CEILING FAN MANUFACTURER'S RECOMMENDATIONS.
11. **VXF-1 TO BE FURNISHED BY DISTRICT, INSTALLED BY MECHANICAL CONTRACTOR. CONTRACTOR SHALL PROVIDE ALL WIRING, CONDUITS, AND EQUIPMENT AS SPECIFIED. PROVIDE ALL ADDITIONAL RELAYS, STARTERS, AND WIRING/CONDUIT AS REQUIRED TO OPERATE VEHICLE EXHAUST FAN IN ACCORDNACE WITH MANUFACTURER REQUIREMENTS.**
12. CONTRACTOR SHALL COORDINATE VOLTAGE OF VEHICLE EXHAUST FAN WITH BUILDING VOLTAGE. PROVIDE ALL TRANSFORMERS TO MATCH VOLTAGES AS REQUIRED

LIGHTING GENERAL NOTES:

G1. PROVIDE ALL REQUIRED WIRING NECESSARY BETWEEN SWITCHES, CONTROLLERS AND/OR OCCUPANCY SENSORS FOR COMPLETE LIGHTING CONTROL. WHERE 3 OR 4 WAY SWITCHES ARE USED, PROVIDE ALL REQUIRED WIRING BETWEEN SWITCHES. WIRE SIZE SHALL EQUAL POWER FEED SIZE.

G2. CONTRACTOR SHALL LOCATE AND INSTALL ALL LIGHT FIXTURES IN MECHANICAL ROOMS TO PROVIDE CLEARANCE FROM ALL MECHANICAL EQUIPMENT. COORDINATE WITH MECHANICAL CONTRACTOR PRIOR TO INSTALLING FIXTURES, SWITCHES, CONDUIT, AND WIRING.

G3. FIXTURES INDICATED WITH CIRCUIT DESIGNATIONS SHALL BE CONNECTED TO LINE SIDE OF CIRCUIT.

G4. FIXTURES INDICATED WITH LETTER DESIGNATIONS SHALL BE CONNECTED TO THE SWITCH, OCCUPANCY SENSOR AND/OR POWER PACK WITH CORRESPONDING LETTER DESIGNATION.

G5. PROVIDE AND INSTALL A DEDICATED NEUTRAL FOR EACH CIRCUIT. CONTRACTOR IS NOT PERMITTED TO USE COMMON NEUTRALS.

G6. PROVIDE BOX AND ACCESSORIES AS PER MANUFACTURER'S RECOMMENDATION FOR ALL SWITCHES OCCUPANCY SENSORS, AND/OR POWER PACKS.

G7. PROVIDE AND INSTALL 10" X 8" PHENOLIC NAMEPLATE DESCRIBING SWITCH FUNCTION. PROVIDE ON/OFF LOCK FOR MAINTENANCE SWITCH.

G8. ALL CEILING MOUNTED FIXTURES WITH EMERGENCY BALLASTS AND ALL FIXTURES THAT ARE PART OF AN EMERGENCY LIGHTING SYSTEM, FED FROM AN EMERGENCY GENERATOR OR CENTRAL BATTERY SYSTEM SHALL BE LABELED. THESE LABELS SHALL BE EASILY READ FROM THE FLOOR LEVEL AND STATE THAT THE FIXTURE IS AN EMERGENCY FIXTURE AND CONTAIN THE PANEL NAME AND CIRCUIT NUMBER THAT IT IS FED FROM.

G9. WIRING FOR EMERGENCY BALLAST IS NOT SHOWN ON PLANS. FIXTURES WITH EMERGENCY BALLASTS SHALL BE PROVIDED WITH AN UNSWITCHED POWER FEED FROM CIRCUIT FEEDING LIGHT FIXTURE.

G10. CONTRACTOR SHALL USE SILICONE WATER PROOF SEALANT TO SEAL TOP, LEFT, AND RIGHT EDGES OF LIGHT FIXTURES TO WALL TO PREVENT MOISTURE FROM ACCUMULATING BEHIND FIXTURE. BOTTOM EDGE SHALL BE LEFT UNSEALED FOR DRAINAGE. COLOR OF SILICONE SHALL MATCH EITHER WALL COLOR OR FIXTURE COLOR. (TYP. OF ALL WALL EXTERIOR MOUNTED FIXTURES).

H2M architects + engineers
538 Broad Hollow Road, 4th Floor East
Melville, NY 11747
631.756.8000 • www.h2m.com

CONSULTANTS:

MARK	DATE	DESCRIPTION

STATE OF NEW YORK — ANTHONY W. KOENIG JR. — 072585 — LICENSED PROFESSIONAL ENGINEER

"ALTERATION OF THIS DOCUMENT EXCEPT BY A LICENSED PROFESSIONAL IS ILLEGAL"

DESIGNED BY:	DRAWN BY:	CHECKED BY:	REVIEWED BY:
SMP	SMP	AWK	AWK
PROJECT No.: VGFD2001	DATE: JULY 2022	SCALE: AS SHOWN	

CLIENT
VAILS GATE FIRE DISTRICT

New Storage Building (Phase I)
New Fire Station (Phase II)

872 Blooming Grove Turnpike
New Windsor, NY 12553

CONTRACT
CONTRACT G
GENERAL CONSTRUCTION

STATUS
FINAL BID DOCUMENT

SHEET TITLE
FIRST FLOOR & MEZZANINE ELECTRICAL LIGHTING AND POWER PLANS PHASE 1

DRAWING No.
E1 100.00

\\h2m.com\shares\Projects\VGFD\Vails Gate Fire Dept\VGFD2001-Vails Gate FD\New Firehouse\02-BIM-CAD\Cmn-docs\elec\E1 100.00 - Electrical Floor Plan.dwg Last Modified: Jul 07, 2022 - 4:27pm Plotted on: Jul 15, 2022 - 2:48pm By:pjackson

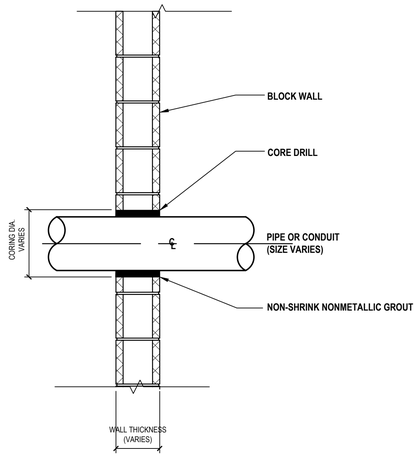

1 Typical Penetration Through Block Wall
SCALE: NTS

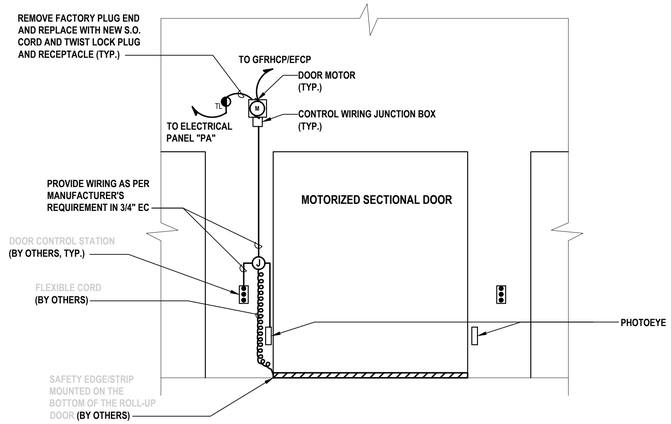

2 Garage Door Control - Elevation Plan
SCALE: NTS

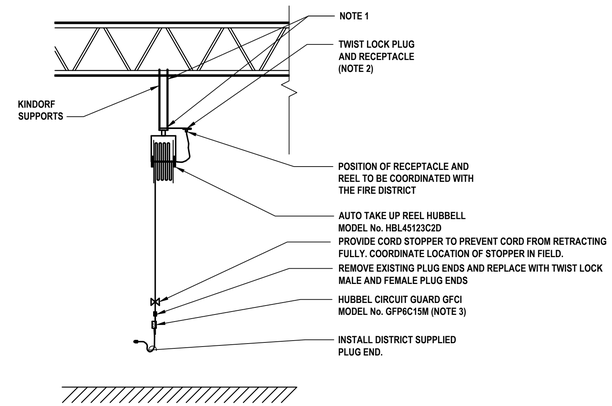

3 Charge Reel Receptacle Detail
SCALE: NTS

NOTES:

1. CONTRACTOR SHALL PROVIDE AND INSTALL ALL MOUNTING HARDWARE AND ACCESSORIES AS REQUIRED TO MOUNT CORD REEL TO CEILING.
2. CONTRACTOR SHALL COORDINATE FINAL MOUNTING LOCATION WITH DISTRICT.
3. COORDINATE FINAL PLUG END WIT DISTRICT/ OWNER IN FIELD.

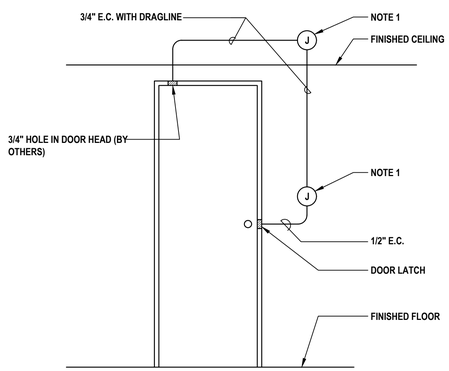

4 Security System Conduit Detail (Single Door)
SCALE: NTS

NOTES:

1. CONTRACTOR SHALL INSTALL JUNCTION BOX SUPPLIED BY OTHERS.
2. COORDINATE INSTALLATION AND EXACT MOUNTING HEIGHT AND LOCATION WITH ARCHITECT/ENGINEER IN FIELD.

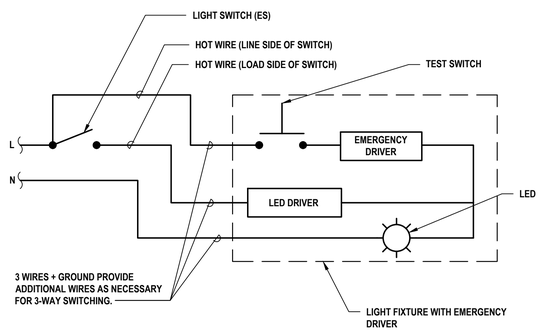

5 Typical Detail of Light Fixture with Emergency Driver
SCALE: NTS

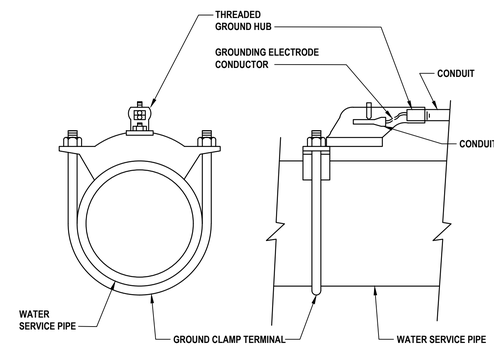

6 Water Pipe Electrode Connection
SCALE: NTS

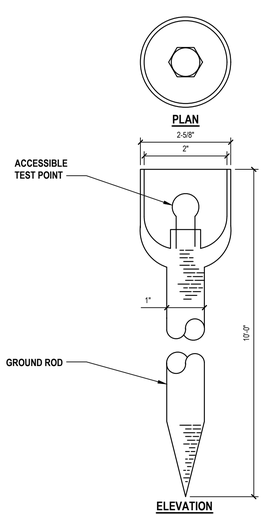

7 Accessible Ground Rod
SCALE: NTS

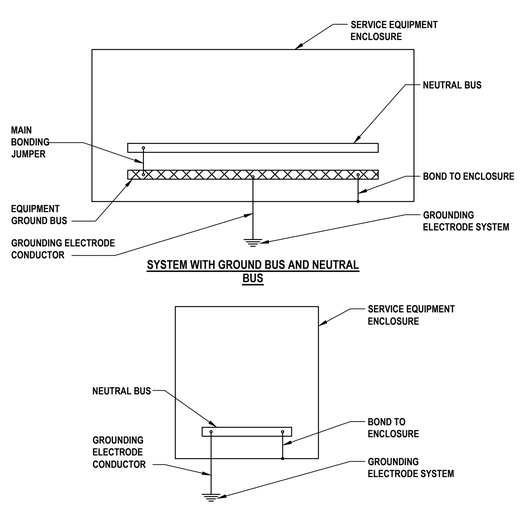

8 Basic System Grounding
SCALE: NTS

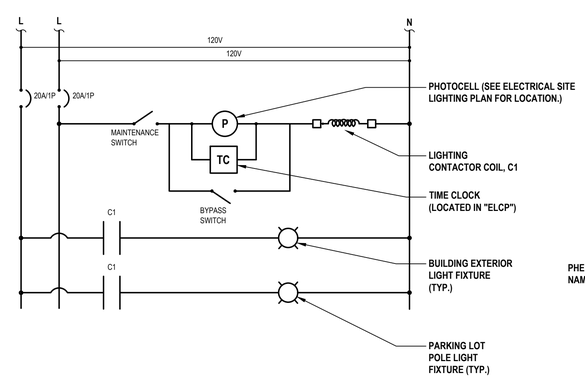

9 Exterior Lighting Control Schematic
SCALE: NTS

NOTES:

1. PROVIDE AND INSTALL NEW LIGHTING CONTROLS, CONTROL WIRING, RELAYS, CONTACTORS, AND SENSORS. INSTALL CONTROLS AND CONTACTORS IN NEW NEMA 1 HINGED DOOR ENCLOSURE. PROVIDE LOCKABLE HANDLE.
2. FUNCTION NAMEPLATE DESCRIPTION:
   MAINTENANCE SWITCH - TURN TO "ON" POSITION FOR NORMAL OPERATION. TURN TO OFF POSITION TO PREVENT LIGHTS FROM TURNING ON
   BYPASS SWITCH - TURN TO "OFF" POSITION FOR NORMAL OPERATION. TURN TO "ON" POSITION TO TURN ON LIGHT FIXTURES. (MAINTENANCE SWITCH MUST BE IN "ON" POSITION).

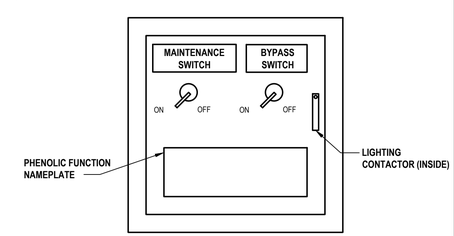

10 Exterior Lighting Control Panel
SCALE: NTS

H 2 M architects + engineers

538 Broad Hollow Road, 4th Floor East
Melville, NY 11747
631.756.8000 • www.h2m.com

CONSULTANTS:

MARK	DATE	DESCRIPTION

STATE OF NEW YORK · SAMUEL M. POLIMENO · 072250 · LICENSED PROFESSIONAL ENGINEER

"ALTERATION OF THIS DOCUMENT EXCEPT BY A LICENSED PROFESSIONAL IS ILLEGAL"

DESIGNED BY:	DRAWN BY:	CHECKED BY:	REVIEWED BY:
SMP	SMP	AWK	AWK
PROJECT No.: VGFD2001	DATE: JULY 2022	SCALE: AS SHOWN	

CLIENT

VAILS GATE FIRE DISTRICT

New Storage Building (Phase I)
New Fire Station (Phase II)

872 Blooming Grove Turnpike
New Windsor, NY 12553

CONTRACT

CONTRACT G
GENERAL CONSTRUCTION

STATUS

FINAL BID DOCUMENT

SHEET TITLE

STORAGE BUILDING ELECTRICAL DETAILS

DRAWING No.

E1 500.00

\\h2m.com\shares\Projects\VGFD\Vails Gate Fire Dept\VGFD2001-Vails Gate FD New Firehouse\02-BIM-CAD\Cons-docs\exhibit\E1 500.00 - Electrical Details (Storage Building).dwg Last Modified: Jul 07, 2022 - 1:23pm Plotted on: Jul 15, 2022 - 2:45pm By jrpalacios

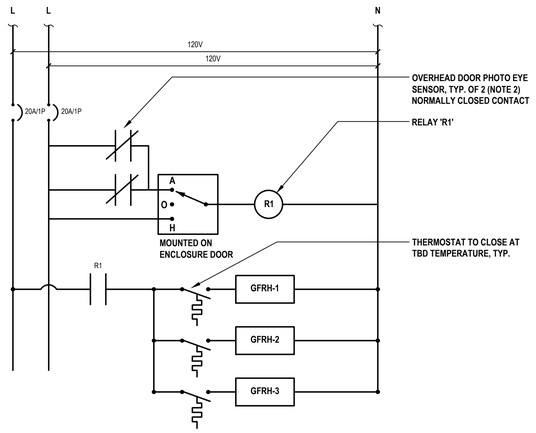

1 Apparatus Bay GFRH Control Panel Schematic

SCALE: NTS

NOTES:

1. CONTRACTOR SHALL PROVIDE ALL REQUIRED RELAYS, CONTACTORS, CONTROL TRANSFORMERS, FUSES, HARDWARE, AND ACCESSORIES REQUIRED FOR COMPLETE CONTROL SYSTEM IN NEMA 1 ENCLOSURE.
2. MOUNT PHOTO EYE SO THAT WHEN ANY OVERHEAD DOOR IS IN THE RAISED POSITION THE CONTACT INDICATED OPENS AND THE HEATERS ARE PREVENTED FROM RUNNING. PROVIDE ADDITIONAL DEVICES AND ACCESSORIES AS REQUIRED.

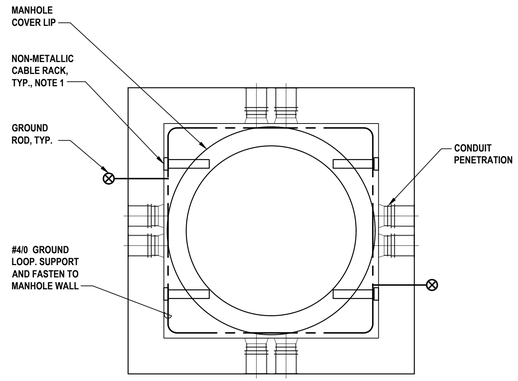

2 Electrical Manhole - Plan View

SCALE: NTS

NOTES:

1. NUMBER OF CABLE RACKS SHOWN IS FOR REFERENCE ONLY. ACTUAL NUMBER OF RACKS MAY VARY PER MANHOLE.

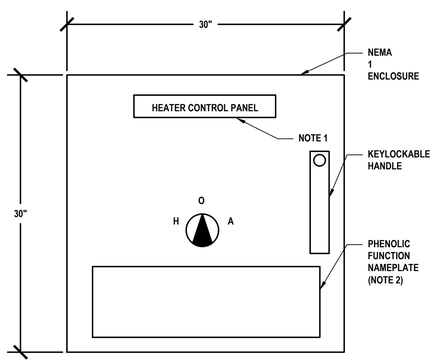

3 GFRHCP STD ELEVATION

SCALE: NTS

NOTES:

1. FOR 'GFRHCP' LABEL SHALL READ "HEATER CONTROL PANEL".
2. PHENOLIC NAMEPLATE:
   FOR GFRHCP: HEATERS SHALL BE SHUT OFF AND PREVENT FROM RUNNING WHEN APPARATUS OVERHEAD DOORS ARE IN OPEN POSITION.

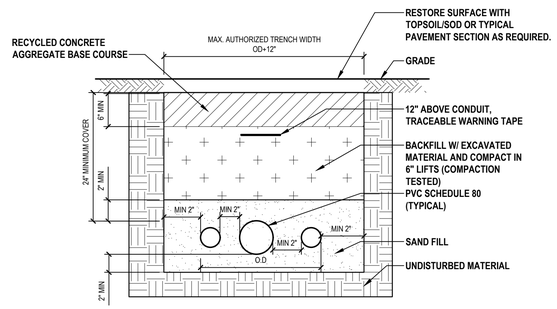

4 Typical Conduit Trench Detail

SCALE: NTS

NOTE:

1. MINIMIZE ALL TRENCH WIDTHS IN ORDER TO AVOID EXCESSIVE DISTURBANCE OF ADJACENT AREAS. TRENCH WALLS SHALL BE VERTICAL. USE SHEET PILING OR A SHEETING BOX TO MAINTAIN THE SPECIFIED TRENCH.

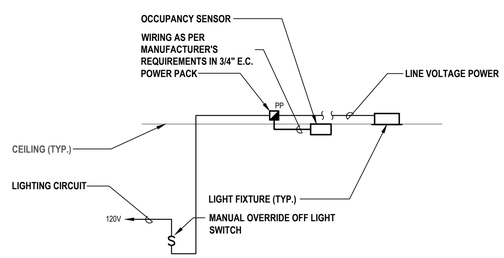

5 Typical Detail of Light Fixture with Occupancy Control Sensor

SCALE: NTS

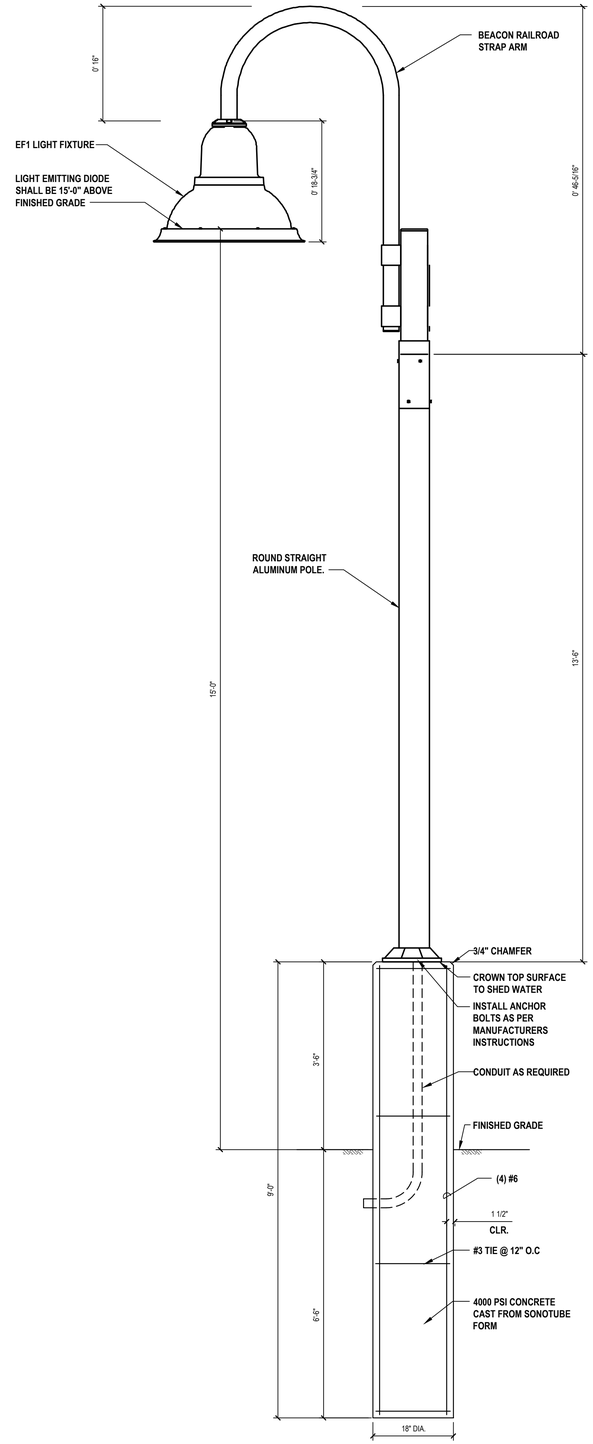

6 Light Pole Base Detail

SCALE: NTS

H 2 M architects + engineers

538 Broad Hollow Road, 4th Floor East
Melville, NY 11747
631.756.8000 • www.h2m.com

CONSULTANTS:

MARK	DATE	DESCRIPTION

STATE OF NEW YORK · ANTHONY W. MOONEY · 092580 · LICENSED PROFESSIONAL ENGINEER

"ALTERATION OF THIS DOCUMENT EXCEPT BY A LICENSED PROFESSIONAL IS ILLEGAL"

DESIGNED BY:	DRAWN BY:	CHECKED BY:	REVIEWED BY:
SMP	SMP	AWK	AWK
PROJECT No.: VGFD2001	DATE: JULY 2022	SCALE: AS SHOWN	

CLIENT

VAILS GATE FIRE DISTRICT

New Storage Building (Phase I)
New Fire Station (Phase II)

872 Blooming Grove Turnpike
New Windsor, NY 12553

CONTRACT

CONTRACT G
GENERAL CONSTRUCTION

STATUS

FINAL BID DOCUMENT

SHEET TITLE

STORAGE BUILDING
ELECTRICAL DETAILS
PHASE 1

DRAWING No.

E1 501.00

\\h2m.com\shares\Projects\VGFD \Vails Gate Fire Dept\VGFD2001 \Vails Gate FD-New Firehouse\02-BIM-CADD\Con-struct\ele\E1.501.00 - Electrical Details (Storage Building).dwg Last Modified: Jul 15, 2022 - 11:29am Plotted on: Jul 15, 2022 - 2:48pm By: ysalazar

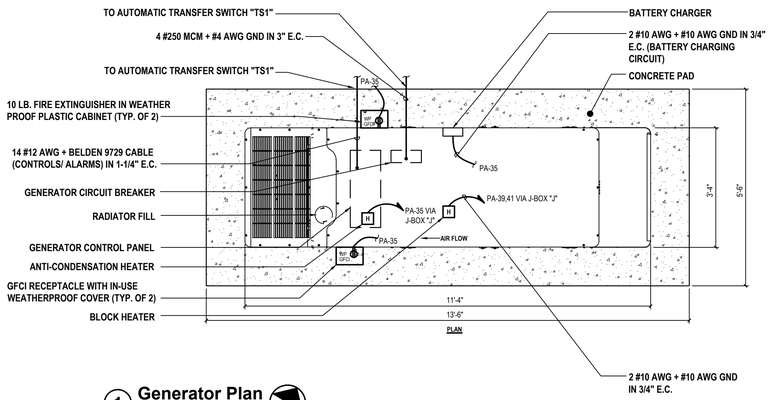

1 **Generator Plan**
SCALE: 1/2"=1'-0"

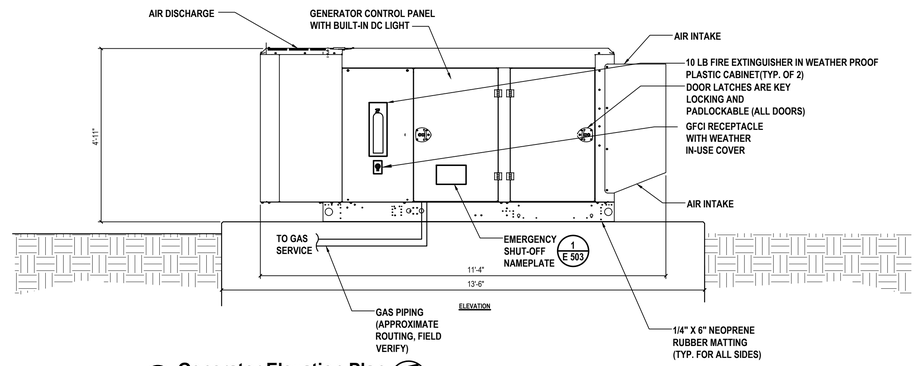

2 **Generator Elevation Plan**
SCALE: 1/2"=1'-0"

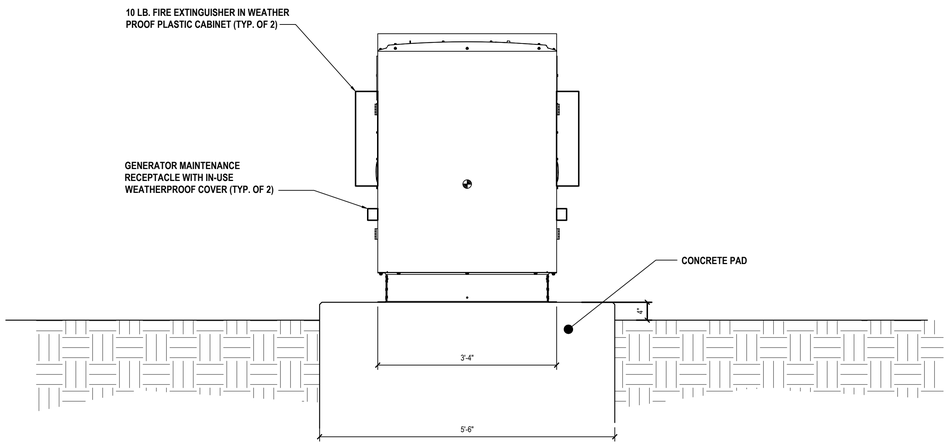

4 **Generator Elevation Details**
SCALE: 1/2"=1'-0"

H 2 M architects + engineers

538 Broad Hollow Road, 4th Floor East
Melville, NY 11747
631.756.8000 • www.h2m.com

CONSULTANTS:

MARK	DATE	DESCRIPTION

STATE OF NEW YORK · SUSAN M. WOOD · 092580 · LICENSED PROFESSIONAL ENGINEER

"ALTERATION OF THIS DOCUMENT EXCEPT BY A LICENSED PROFESSIONAL IS ILLEGAL"

DESIGNED BY:	DRAWN BY:	CHECKED BY:	REVIEWED BY:
SMP	SMP	AWK	AWK

PROJECT No.:	DATE:	SCALE:
VGFD2001	JULY 2022	AS SHOWN

CLIENT

VAILS GATE FIRE DISTRICT

New Storage Building (Phase I)
New Fire Station (Phase II)

872 Blooming Grove Turnpike
New Windsor, NY 12553

CONTRACT

CONTRACT G
GENERAL CONSTRUCTION

STATUS

FINAL BID DOCUMENT

SHEET TITLE

STORAGE BUILDING ELECTRICAL GENERATOR DETAILS PHASE 1

DRAWING No.

E1 502.00

\\h2m.com\shares\Projects\VGFD \Vails Gate Fire Dept\VGFD2001-\Vails Gate FD-New Firehouse\02-BIM-CADD\Cnc-docs\elec\E1 502.00 - Electrical Generator Details (Storage Building).dwg Last Modified: Jul 07, 2022 - 1:25pm Plotted on: Jul 15, 2022 - 2:48pm By pyalacios

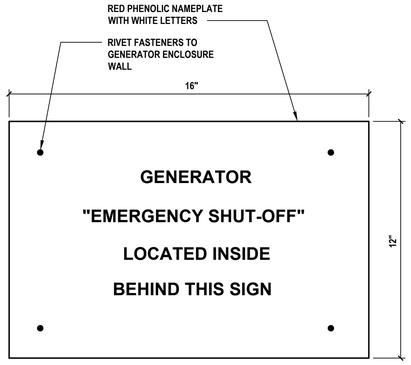

1 **Emergency Shut-Off Name Plate**
SCALE: NTS

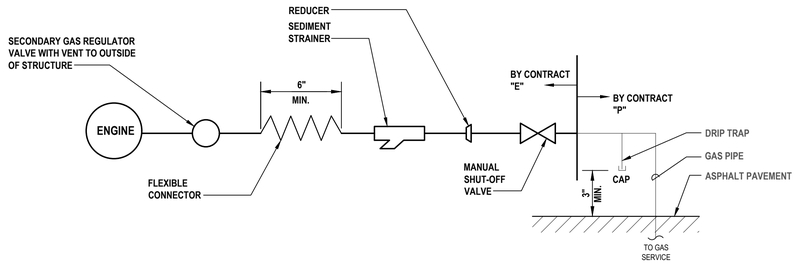

2 **Fuel Supply Schematic**
SCALE: NO SCALE

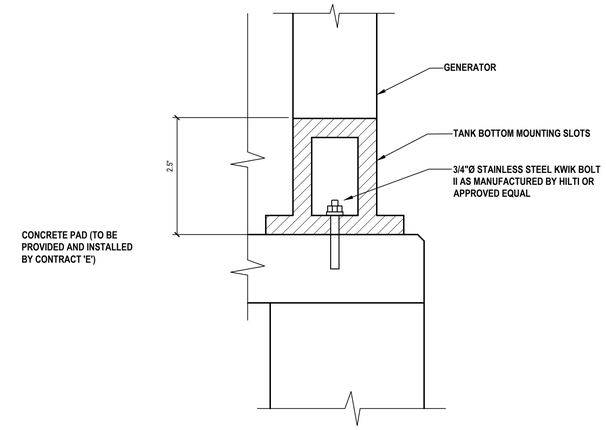

3 **Generator Enclosure Anchoring Detail**
SCALE: NTS

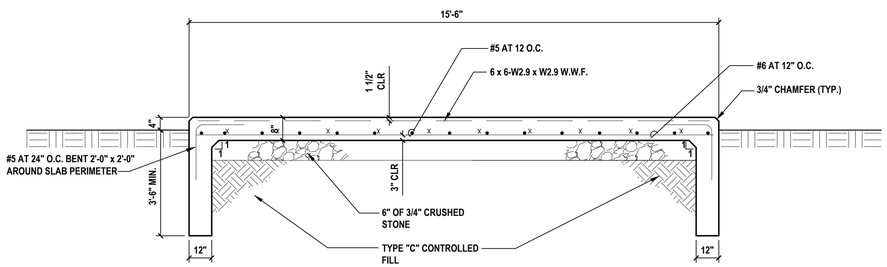

4 **Section A-A**
SCALE: NO SCALE

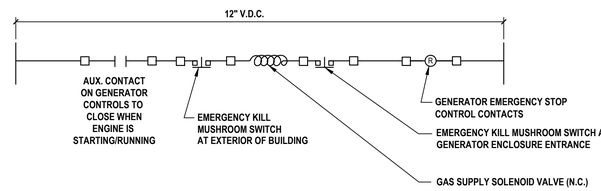

5 **Generator Emergency Shutoff Control Circuit**
SCALE: NO SCALE

6 **No Smoking Sign Detail**
SCALE: NTS

NOTE:

1. "NO SMOKING" SIGNS SHALL BE PLACED CONSPICUOUSLY ON GENERATOR ENCLOSURE.

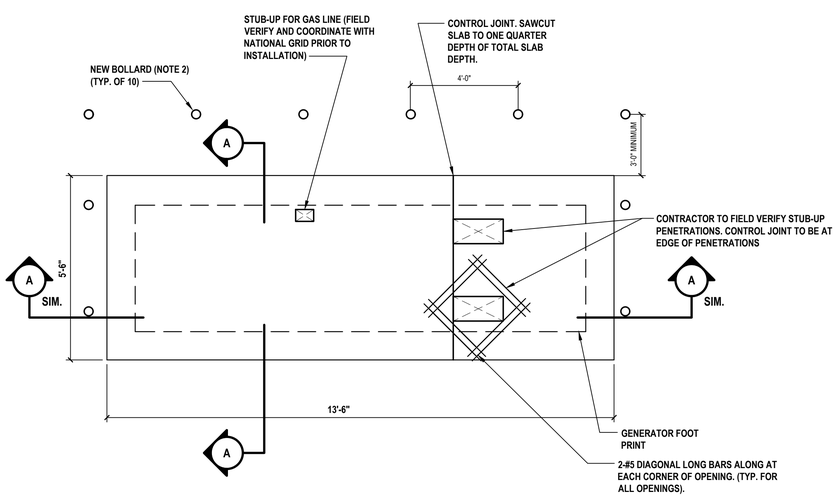

7 **Generator Pad Plan**
SCALE: NO SCALE

NOTES:

1. PAD DIMENSION BASED ON SPECIFIED EQUIPMENT. 1'-0" MIN ALL AROUND

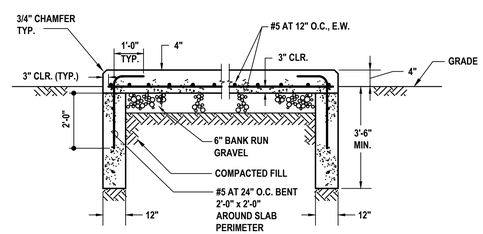

8 **Section B-B**
SCALE: NTS

H2M architects + engineers
538 Broad Hollow Road, 4th Floor East
Melville, NY 11747
631.756.8000 • www.h2m.com

CONSULTANTS:

MARK	DATE	DESCRIPTION

"ALTERATION OF THIS DOCUMENT EXCEPT BY A LICENSED PROFESSIONAL IS ILLEGAL"

DESIGNED BY:	DRAWN BY:	CHECKED BY:	REVIEWED BY:
SMP	SMP	AWK	AWK
PROJECT No.: VGFD2001	DATE: JULY 2022		SCALE: AS SHOWN

CLIENT
VAILS GATE FIRE DISTRICT

New Storage Building (Phase I)
New Fire Station (Phase II)

872 Blooming Grove Turnpike
New Windsor, NY 12553

CONTRACT
CONTRACT G
GENERAL CONSTRUCTION

STATUS
FINAL BID DOCUMENT

SHEET TITLE
STORAGE BUILDING ELECTRICAL GENERATOR DETAILS PHASE 1

DRAWING No.
E1 503.00

\\h2m.com\shares\Projects\VGFD\Vails Gate Fire Dist\VGFD2001-V\Vails Gate FD New Firehouse\02-BIM-CADD\Cons-docs\elec\E1 503.00 - Electrical Generator Details (Storage Building).dwg Last Modified: Jul 07, 2022 - 1:25pm Plotted on: Jul 15, 2022 - 2:46pm By pgalacios

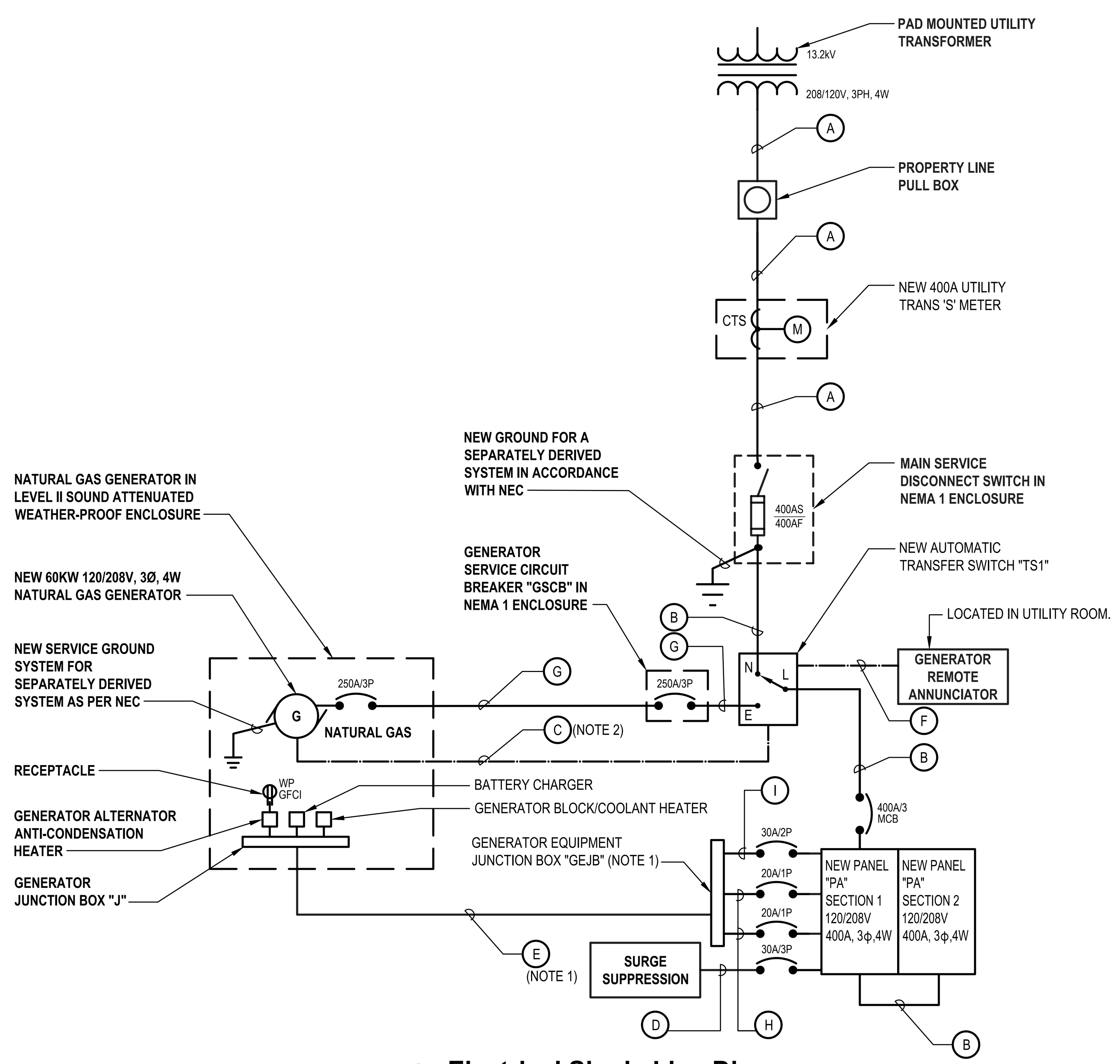

1 Electrical Single Line Diagram
SCALE: NTS

FEEDER SCHEDULE

FEEDER	COPPER CONDUCTOR AND CONDUITS FEEDER SCHEDULE
A	4 - 500 MCM IN 4" E.C. (PVC SCHEDULE 80)
B	4 - 500 MCM + #3 AWG GND IN 4" E.C.
C	10 #14 AWG + BELDEN 9729 CABLE IN 1-1/4" E.C (CONTROLS / ALARMS) AND 2 #10 AWG GND IN 3/4" E.C. (BATTERY CHARGING CIRCUIT)
D	MICRO Z, LOW INDUCTANCE CABLE IN 1" E.C
E	6 # 8AWG + 3 #8 AWG GND IN 1-1/2" E.C.
F	BELDEN '9729' CABLE IN 1" E.C. (ROUTED CONTINUOUS FROM GENERATOR)
G	4 #250 MCM + #4 AWG GND IN 3" E.C.
H	2 # 12AWG + #12 AWG GND IN 3/4" E.C.
I	2 # 10AWG + #10 AWG GND IN 3/4" E.C.

SINGLE LINE NOTES:

1. CONTRACTOR SHALL COMBINE CIRCUITS INTO ONE CONDUIT TO GENERATOR.
2. BELDEN '9729' CABLE SHALL BE ROUTED CONTINUOUS FROM GENERATOR TO GENERATOR REMOTE ANNUNCIATOR.

EXTERIOR LIGHTING FIXTURE SCHEDULE

DESIGNATION	SYMBOL	MANUFACTURER	MODEL NUMBER	TYPE	WATTS	COLOR TEMPERATURE	VOLTAGE	LUMENS	MOUNTING	REMARKS	MOUNTING HEIGHT
○	EF1	BEACON	URB-CAP-21-24L-55-4K7-UNV-4-BC	LED	27	4000K	UNV	-	POLE	PARKING LOT POLE LIGHTING POLE MODEL NUMBER: RSA-B-SHO-S-15-40-A/B/C-CAP-2L-B3-DBT-VM2	15'-0" AFF
○	EF2	PRESCOLITE	LTR-4RD-H-HL40L-DM1_LTR-4RD-T-HL40K8WDS	LED	42.9	4000K	UNV	-	IN CANOPY	EMERGENCY BATTERY BACKUP WITH 90 MINUTES OF BACKUP CAPACITY	RECESSED IN CANOPY
◪	EF3	HUBBELL	QSP2-24L-30-4K7-4	LED	30	3000K	UNV	-	WALL MOUNT SURFACE	EMERGENCY BATTERY BACKUP WITH 90 MINUTES OF BACKUP CAPACITY	6" ABOVE DOOR

INTERIOR LIGHTING FIXTURE SCHEDULE

DESIGNATION	SYMBOL	MANUFACTURER	MODEL NUMBER	TYPE	WATTS	COLOR TEMPERATURE	VOLTAGE	LUMENS	MOUNTING	REMARKS	MOUNTING HEIGHT
◪	F1	COLUMBIA	LXEM-4-40-HL-RFA-EDU-ELL14 +XEHC	LED	47	4000K	UNV	-	CEILING MOUNTED CHAIN HUNG	EMERGENCY BATTERY BACKUP WITH 90 MINUTES OF BACKUP CAPACITY	17'-0" AFF
▭	F2	COLUMBIA	LXEM-4-40-HL-RFA-EDU+XEHC	LED	47	4000K	UNV	-	CEILING MOUNTED CHAIN HUNG		17'-0" AFF
⊗	EX	COMPASS LIGHTING	CEWSRE	LED	2.7	3000K	UNV	-	WALL MOUNT SURFACE	EMERGENCY BATTERY BACKUP WITH 90 MINUTES OF BACKUP CAPACITY (NOTE EL2)	6" ABOVE DOOR

LIGHT FIXTURE SCHEDULE NOTES:

EL1. CONTRACTOR SHALL PROVIDE, INSTALL, LOCATE AND MOUNT OCCUPANCY SENSOR AS PER MANUFACTURES RECOMMENDATIONS. CONTRACTOR SHALL NOT MOUNT OCCUPANCY SENSOR DIRECTLY TO SLOPED CEILING. CONTRACTOR SHALL PROVIDE AND INSTALL MOUNTING HARDWARE TO ENSURE OCCUPANCY SENSOR LENS FACE IS ORIENTATED DOWNWARD, FACING THE FINISHED FLOOR.

EL2. CONTRACTOR SHALL COVER LEFT AND RIGHT ILLUMINATED DIRECTIONAL ARROWS AS PER MANUFACTURER'S RECOMMENDATIONS.

SPARE EQUIPMENT:

SE1. IN ADDITION TO THE EQUIPMENT SHOWN ON THE DRAWINGS, THE CONTRACTOR SHALL INCLUDE THE COST FOR PROVIDING THE FOLLOWING SPARE EQUIPMENT TYPES IN THE BASE BID. CONTRACTOR SHALL INCLUDE IN BASE BID THE COST TO DELIVER THE FOLLOWING EQUIPMENT TO A STORAGE LOCATION DESIGNATED BY THE OWNER. REFER TO THE LIGHT FIXTURE SCHEDULE ABOVE FOR ADDITIONAL INFORMATION.

LIGHTING CONTROLS SCHEDULE

TYPE	MANUFACTURER	MODEL NUMBER	VOLTAGE	MOUNTING	MOUNTING HEIGHT	REMARKS
S_{VS}	HUBBELL	LHDMIRS3-N-WH-M	120V	WALL MOUNTED	48"AFF	VS DENOTES VACANCY SENSOR
◪ P1-X A PP1	HUBBELL	UVPP	-	AFC	CEILING	POWER PACK
PC	INTERMATIC	K4221C	120V			PHOTOCELL
◉ OSW	HUBBELL	SENSOR: WSP-SM-24V-WH + LENS: WSP-L360-WH	-	CEILING MOUNTED SURFACE	CEILING	NOTE EL1

CONTRACTOR SHALL COORDINATE ALL DEVICE COLORS AND FACEPLATES WITH ARCHITECT/OWNER IN FIELD.
* PIR = PASSIVE INFRARED

NOTES:

1. CONTRACTOR SHALL PROVIDE ALL MATERIALS AND ACCESSORIES AS REQUIRED TO PROVIDE FULL FUNCTIONING LIGHTING CONTROL SYSTEM TO FUNCTION AS SHOWN IN THE CONSTRUCTION DOCUMENTS. ALL SUBSTITUTE CONTROLS WILL REQUIRE SUBMISSION OF NEW CONTROL LAYOUT, STAMPED BY A PROFESSIONAL ENGINEER. SUBSTITUTE CONTROLS SHALL FUNCTION AS DESIGNED ON THE CONTRACT DOCUMENTS AND CONTRACTOR SHALL GUARANTEE FUNCTIONALITY.
2. CONTRACTOR SHALL REFER TO CONTRACT DRAWINGS FOR SPECIFIC OUTPUT CONTROLS, AND DIMMING REQUIRED FOR ROOM CONTROLLER.
3. ALL SWITCHES AND SWITCH BANKS TYPES SHALL BE COORDINATED WITH THE ENGINEER/DISTRICT IN FIELD.

DISCONNECT SWITCH SCHEDULE

DISCONNECT SWITCH IDENTIFICATION	TYPE	ENCLOSURE	VOLTS	POLES	FRAME SIZE AMPS	FUSE RATING
DS1	UNFUSED	NEMA 3R	208	2	30A	-
DS2	UNFUSED	NEMA 3R	208	3	60A	-

TRANSFER SWITCH SCHEDULE

TRANSFER SWITCH IDENTIFICATION	TYPE	ENCLOSURE	VOLTS	PHASE	POLES	AMPS
TS1	AUTOMATIC	NEMA 1	208	3Ø	4	400

TIME CLOCK SCHEDULE

RELAY	VOLTAGE/POLE	PANEL-CIRCUIT No.	LOAD	CONTROLS
1	120/1	PA-24	EXTERIOR BUILDING LIGHTING	PHOTOCELL/TIMER
2	120/1	PA-62	EXTERIOR POLE LIGHT FIXTURES	PHOTOCELL/TIMER
3	120/1	PA-4	TXF-1	TIMER

MOTOR STARTER SCHEDULE

IDENTIFICATION	NEMA SIZE	VOLTS / PHASE	ENCLOSURE TYPE	DISCONNECT AMPS / POLE	ACCESSORIES
S1	0	120 / 1Ø	NEMA 1	30 / 2	H-O-A SWITCH, RUN AND OVERLOAD LIGHT
S2	0	120 / 1Ø	NEMA 1	15 / 1	H-O-A SWITCH, RUN AND OVERLOAD LIGHT

Panel Wiring Schedule (3-Phase)

Panelboard: PA (SECTION 1) Voltage: 120/208 Phase: 3 Wire: 4 AIC Rating: 65,000
Manufacturer: SIEMENS Mains: 400A MCB Mains Rating: 400A
Panel Type: P2 Mounting: SURFACE Options: - Note: LOCATED IN UTILITY CLOSET
NEMA Type Enclosure: 1

LOAD DESCRIPTION	BREAKER OPTION	TRIP AMPS AND POLES	ØA	ØB	ØC	CIRC. No.	CIRC. No.	ØA	ØB	ØC	TRIP AMPS AND POLES	BREAKER OPTION	LOAD DESCRIPTION
POWER WASHER		30A/2P	2496			1	2	528			15A/1P	HACR	GXF-2
				2496		3	4		702		20A/1P	HACR	(3)-APP BAY RADIANT HEATERS
"OH-1" DOOR MOTOR		20A/1P			1500	5	6			540	20A/1P		MEZZ RECEPTACLES
"OH-2" DOOR MOTOR		20A/1P	1500			7	8	720			20A/1P		STORAGE RECEPTACLES
"OH-3" DOOR MOTOR		20A/1P		1500		9	10		900		20A/1P		OFFICE RECEPTACLES
"OH-4" DOOR MOTOR		20A/1P			1500	11	12			500	20A/1P	GFCI	CEILING CORD REEL
BATHROOM RECEPTACLE / TXF-1	GFCI	15A/1P	200			13	14	500			20A/1P	GFCI	CEILING CORD REEL
FIRE ALARM CONTROL PANEL	LO	20A/1P		500		15	16		500		20A/1P	GFCI	CEILING CORD REEL
"OH-5" DOOR MOTOR		20A/1P			1500	17	18			–	20A/1P		SPARE
CEILING FANS		20A/1P	275			19	20	360			20A/1P		T.V. RECEPTACLE
SPARE		20A/1P		0		21	22		713.1		20A/1P		STORAGE LIGHTING
GAS DETECTION SYSTEM (GDS-1)		20A/1P			200	23	24			292	20A/1P	TC	EXTERIOR LIGHTING
FUELSHIELD & METER		20A/1P	200			25	26	846			20A/1P		INTERIOR LIGHTING
MOTORIZED DAMPERS		20A/1P		200		27	28		–		20A/1P		SPARE
CEILING CORD REEL	GFCI	20A/1P			1500	29	30			–	20A/1P		SPARE
CEILING CORD REEL	GFCI	20A/1P	1500			31	32	–			20A/1P		SPARE
CEILING CORD REEL	GFCI	20A/1P		1500		33	34		1500		20A/1P	GFCI	CEILING CORD REEL
ANTI COND HEATER, BATTERY, RECEPT.		20A/1P			1500	35	36			1500	20A/1P	GFCI	CEILING CORD REEL
GENERATOR OVERFILL PANEL		20A/1P	1500			37	38	2880			30A/3P		SURGE PROTECTION
BLOCK HEATER		30A/2P		2496		39	40		2880				
					2496	41	42			2880			

Breaker Options:
AFCI - Arc Fault Circuit Interrupter
AS - Powerlink AS Breaker
AUX - Auxiliary Contacts
GFCI - Ground Fault Circuit Interrupter
HACR - Heating, A/C & Refrigeration
LO - Handle lock-off device
PA - Handle Padlock Attachment
SF - Subfeed
ST - Shunt Trip Type
TC - Time Clock Control

Panel Wiring Schedule (3-Phase)

Panelboard: PA (SECTION 2) Voltage: 120/208 Phase: 3 Wire: 4 AIC Rating: 65,000
Manufacturer: SIEMENS Mains: MLO Mains Rating: 400A
Panel Type: P2 Mounting: SURFACE Options: - Note: LOCATED IN UTILITY CLOSET
NEMA Type Enclosure: 1

LOAD DESCRIPTION	BREAKER OPTION	TRIP AMPS AND POLES	ØA	ØB	ØC	CIRC. No.	CIRC. No.	ØA	ØB	ØC	TRIP AMPS AND POLES	BREAKER OPTION	LOAD DESCRIPTION
WMH-1	HACR	20A/1P	1500			43	44	1373			20A/2P	HACR	GXF-1
WMH-1	HACR	20A/1P		1500		45	46		1373				
WMH-1	HACR	20A/1P			1500	47	48			885	15A/2P	HACR	ACCU-1/AC-1
WMH-1	HACR	20A/1P	1500			49	50	885					
WMH-1	HACR	20A/1P		1500		51	52		3723		50A/3P	HACR	VXF-1
AIR COMPRESSOR		30A/2P			1500	53	54			3723			
			1500			55	56	3723					
FUEL STORAGE PUMP		20A/2P		1644		57	58		900		20A/1P	GFCI	EXTERIOR RECEPTACLES
					1644	59	60			540	20A/1P	GFCI	WORK BENCH RECEPTACLES
WH-1		20A/2P	1497			61	62	124			20A/1P		SITE LIGHTING
				1497		63	64		500		20A/1P		TIME CLOCK / PHOTOCELL
HOT BOX		20A/1P			90	65	66			-	20A/1P		SPARE
GENERAL RECEPTACLES		20A/1P	720			67	68	-			20A/1P		SPARE
GENERAL RECEPTACLES		20A/1P		720		69	70		-		20A/1P		SPARE
GENERAL RECEPTACLES		20A/1P			720	71	72			-	20A/1P		SPARE
ELCP		20A/1P	200			73	74	-			20A/1P		SPARE
EXTERIOR LTG		20A/1P		54		75	76		-		20A/1P		SPARE
SPARE					-	77	78			-	20A/1P		SPARE
SPARE			-			79	80	-			20A/1P		SPARE
SPARE				-		81	82		-		20A/1P		SPARE
SPARE					-	83	84			-	20A/1P		SPARE

Connected Totals:
ØA 26.5 KVA
ØB 29.3 KVA
ØC 26.5 KVA
Total 82.3 KVA 228.5 Amperes

(All Phases to be balanced to within 7% using Actual Load Totals.)

Breaker Options:
AFCI - Arc Fault Circuit Interrupter
AS - Powerlink AS Breaker
AUX - Auxiliary Contacts
GFCI - Ground Fault Circuit Interrupter
HACR - Heating, A/C & Refrigeration
LO - Handle lock-off device
PA - Handle Padlock Attachment
SF - Subfeed
ST - Shunt Trip Type
TC - Time Clock Control

H2M architects + engineers
538 Broad Hollow Road, 4th Floor East
Melville, NY 11747
631.756.8000 ▪ www.h2m.com

CONSULTANTS:

MARK	DATE	DESCRIPTION

STATE OF NEW YORK ANTHONY WOONGJIN KIM 092583 LICENSED PROFESSIONAL ENGINEER

"ALTERATION OF THIS DOCUMENT EXCEPT BY A LICENSED PROFESSIONAL IS ILLEGAL"

DESIGNED BY:	DRAWN BY:	CHECKED BY:	REVIEWED BY:
SMP	SMP	AWK	AWK

PROJECT No.:	DATE:	SCALE:
VGFD2001	JULY 2022	AS SHOWN

CLIENT

VAILS GATE FIRE DISTRICT

New Storage Building (Phase I)
New Fire Station (Phase II)

872 Blooming Grove Turnpike
New Windsor, NY 12553

CONTRACT
CONTRACT G
GENERAL CONSTRUCTION

STATUS
FINAL BID DOCUMENT

SHEET TITLE
STORAGE BUILDING
ELECTRICAL
SINGLE LINE DIAGRAM
PHASE 1

DRAWING No.
E1 600.00

\\h2m.com\shares\Projects\VGFD (Vails Gate Fire Dept)\VGFD2001-(Vails Gate FD-New Firehouse)\02-BIM-CADD\Con-docs\elec\E1 600.00 - Electrical Single Line Diagram (Storage Building).dwg Last Modified: Jul 07, 2022 - 1:59pm Plotted on: Jul 15, 2022 - 2:49pm By ppalacios

	CONTROL UNIT ANNUNCIATION					NOTIFICATION				SUPPLEMENTARY		
	ACTUATE COMMON ALARM SIGNAL INDICATOR	ACTUATE VISUAL ALARM SIGNAL	ACTUATE COMMON SUPERVISORY SIGNAL INDICATOR	ACTUATE COMMON TROUBLE SIGNAL	ACTUATE ZONE INDICATION	ACTUATE FULL BUILDING EVACUATION SIGNAL	DISPLAY CHANGE OF STATUS	TRANSMIT FIRE ALARM SIGNAL TO SUPERVISING STATION	TRANSMIT SUPERVISION SIGNAL TO SUPERVISING STATION	TRANSMIT TROUBLE SIGNAL TO SUPERVISING STATION	HVAC FAN SHUTDOWN	INITIATE EXTERIOR STROBE
MANUAL PULL STATION	●	●			●	●	●	●			●	●
SMOKE DETECTOR	●	●			●	●	●	●			●	●
HEAT DETECTOR	●	●			●	●	●	●			●	●
DUCT DETECTOR	●	●			●	●	●	●			●	●
CARBON MONOXIDE DETECTOR					●		●		●			
FIRE PANEL AC POWER FAILURE			●						●			
FA SYSTEM LOW BATTERY				●						●		
OPEN CIRCUIT				●						●		
GROUND FAULT				●						●		
NOTIFICATION APPLIANCE CIRCUIT SHORT				●						●		

1 Fire Alarm Sequence of Operation

SCALE: NOT TO SCALE

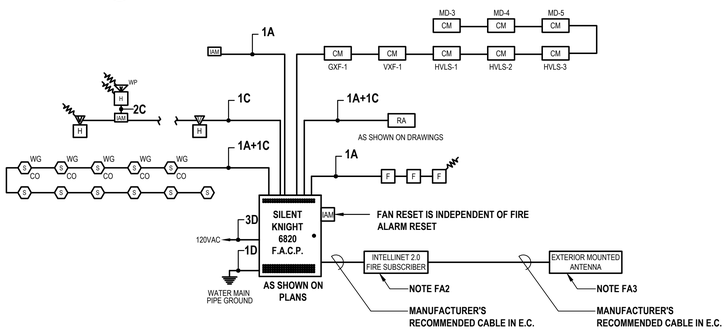

2 Fire Alarm Riser Diagram (Note FA4)

SCALE: NTS

WIRE LEGEND

	WIRE DESCRIPTION	TYPE	NOTES
A	1 PAIR TWISTED SHIELDED #18	FPLP	-
B	#14 AWG. NON SHIELDED	THHN	-
C	1 PAIR #14 AWG. NON SHIELDED	FPLP	-
D	#12 AWG. NON SHIELDED	THHN	NOTE FA1

LIST OF DRAWINGS

FA-001.00	FIRE ALARM LEGEND
FA-100.00	FIRST FLOOR & MEZZANINE FIRE ALARM PLANS

TYPICAL DEVICE LOCATIONS

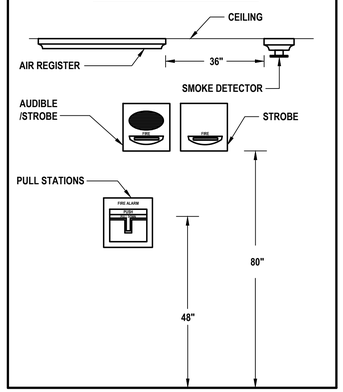

3 Typical Fire Alarm Device Location

SCALE: NTS

FIRE ALARM LEGEND

SYMBOL	DESCRIPTION	COMMENTS
FACP	FIRE ALARM CONTROL PANEL.	
RA	REMOTE ANNUNCIATOR WITH BACKBOX.	
S	SMOKE DETECTOR.	
RAL S	ABOVE CEILING SMOKE DETECTOR WITH REMOTE ALARM LAMP.	
RAL D S / RT	DUCT DETECTOR WITH REMOTE ALARM LAMP; "S" DENOTES SUPPLY, "R" DENOTES RETURN.	
	HEAT DETECTOR.	
F	HEAT DETECTOR 200°.	
CO	CARBON MONOXIDE DETECTOR	
	HORN/STROBE COMBO.	
	SPEAKER/STROBE COMBINATION	
WP	WEATHER PROOF HORN/STORBE COMBO WITH BACKBOX.	
AM	ADAPTER MODULE WITH MOUNTING PLATE.	
SH	SMOKE HATCH (F.B.O.).	
	STROBE.	
DH	MAGNETIC DOOR HOLDER.	
F	MANUAL PULL STATION WITH BACKBOX.	
R	RELAY.	
IAM	INDIVIDUAL ADDRESSABLE MODULE.	
AES	AUTOMATIC EXTINGUISHING SYSTEM.	
	MOTOR STARTER.	
	END OF LINE RESISTOR.	
BT	BEAM DETECTOR TRANSMITTER.	
BR	BEAM DETECTOR RECEIVER.	
SP	SURGE PROTECTOR.	
	BELL/STROBE.	
ER S	SMOKE DETECTOR FOR ELEVATOR RECALL.	
SRP	SUPPRESSION RELEASING PANEL.	
MS	MAINTENANCE SWITCH.	
SOL	SOLENOID (F.B.O.).	
PS	PRESSURE SWITCH.	
TS	TAMPER SWITCH	
FS	FLOW SWITCH	
CS	COIL SUPERVISORY (F.B.O.).	
CL	AIR COMPRESSOR, LOW PRESSURE (F.B.O.).	
CH	AIR COMPRESSOR, HIGH PRESSURE (F.B.O.).	
CM	CONTROL MODULE	
YELLO B STAGE 2	STAGE 2 BELL.	

FIRE ALARM RISER NOTES:

FA1. PROVIDE ALL 120 VOLT CIRCUITS IN CONDUIT.

FA2. CONTRACTOR SHALL PROVIDE AND INSTALL A NEW INTELLINET 2.0 FIRE SUBSCRIBER INCLUDING ONBOARD INTELLIPRO CARD (AES CORPORATION MODEL NUMBER: 7707P-88-ULP OR APPROVED EQUAL). CONTRACTOR SHALL PROVIDE AND INSTALL FIRE SUBSCRIBER ADJACENT TO THE NEW FIRE ALARM CONTROL PANEL AS REQUIRED TO SEND UNIQUE ALARM, SUPERVISORY, AND TROUBLE SIGNALS TO THE FIRE DISTRICT'S CENTRAL STATION MONITORING SERVICE UPON ACTIVATION OF FIRE ALARM SYSTEM. FIRE SUBSCRIBER SHALL BE PROGRAMMED TO SEND UNIQUE SIGNALS TO THE CENTRAL STATION INDICATING ACTIVATION OF CARBON MONOXIDE DETECTORS. CONTRACTOR SHALL PROVIDE AND INSTALL ALL WIRING, CONDUIT AND ACCESSORIES AS REQUIRED TO INTERCONNECT THE FIRE SUBSCRIBER WITH THE NEW FIRE ALARM CONTROL PANEL, INCLUDING LINE VOLTAGE WIRING. FIRE ALARM CONTROL PANEL SHALL BE PROVIDED WITH A DIALER WHICH IS COMPATIBLE WITH THE FIRE SUBSCRIBER.

FA3. CONTRACTOR SHALL PROVIDE AND INSTALL A WEATHERPROOF ANTENNA COMPATIBLE WITH THE FIRE SUBSCRIBER ON THE EXTERIOR OF THE BUILDING SIZED AS REQUIRED TO COMMUNICATE WITH THE DISTRICT'S CENTRAL STATION VIA THE LONG RANGE WIRELESS NETWORK IN THE AREA. CONTRACTOR SHALL PROVIDE AND INSTALL ALL MOUNTING HARDWARE AND ACCESSORIES REQUIRED. CONTRACTOR SHALL PROVIDE AND INSTALL ALL WIRING AND CONDUIT BETWEEN THE ANTENNA AND THE FIRE SUBSCRIBER AS REQUIRED.

FA4. FIRE ALARM RISER DIAGRAM IS SCHEMATIC. REFER TO FLOOR PLANS FOR DEVICE TYPES AND QUANTITIES.

GENERAL FIRE ALARM NOTES:

1. ALL WIRING TO BE PROVIDED AND INSTALLED ACCORDING TO THE LATEST REVISION OF THE NATIONAL ELECTRIC CODE OR AS DICTATED BY CONTRACT SPECIFICATIONS, AND THE LATEST EDITION OF N.F.P.A 72 REQUIRED BY LOCAL ORDINANCE.
2. ALL CONDUCTORS MUST BE TEST FREE OF OPENS, SHORTS AND GROUNDS.
3. GROUNDING MUST COMPLY WITH THE NATIONAL ELECTRIC CODE. GROUNDING MUST BE No. 12 A.W.G.
4. ALL PANEL TERMINATIONS TO BE SUPERVISED BY A FACTORY AUTHORIZED TECHNICIAN PRIOR TO POWERING EQUIPMENT.
5. FOR COMPONENT WIRING AND INSTALLATION INFORMATION REFER TO MANUFACTURERS REQUIREMENTS.
6. REFER TO CONTRACT DRAWINGS FOR APPROXIMATE DEVICE LOCATIONS. DRAWINGS REPRESENT DEVICE QUANTITIES. SHOP DRAWINGS SHALL BE SUBMITTED SHOWING SCALED LOCATIONS. CONTRACTOR TO SUBMIT PLANS STAMPED BY LICENSED NEW YORK PROFESSIONAL ENGINEER ONLY. SHOP DRAWINGS WITHOUT P.E STAMP WILL BE AUTOMATICALLY REJECTED.
7. ALL HVAC EQUIPMENT WITH A CFM RATING OF 1000 CFM OR GREATER SHALL BE INTERCONNECTED TO THE FIRE ALARM SYSTEM AND SHUT DOWN UPON FIRE ALARM SYSTEM ALARM ACTIVATION.
8. PLENUM WIRING TO BE USED IN ALL AREAS. CONDUIT MUST BE USED IN ALL AREAS.
9. PROVIDE AND INSTALL DETECTORS A MINIMUM OF 3'-0" FROM ANY SUPPLY OR RETURN AIR REGISTERS.
10. WHEN INSTALLING SHIELDED CABLE THE FOLLOWING MUST BE OBSERVED:
    A. METALLIC CONTINUITY MUST BE MAINTAINED THROUGHOUT THE CABLE RUN.
    B. THE CABLE SHIELD MUST BE ISOLATED FROM GROUND AND TERMINATED ONLY IN THE ASSOCIATED CONTROL PANEL AT THE TERMINAL INDICATED ON THE CONTROL PANEL DRAWINGS. THE REMOTE END OF THE SHIELD (AT LAST DEVICE) MUST BE TAPED AND ISOLATED FROM GROUND.
11. ALL STROBE APPLIANCES SHALL BE SYNCHRONIZED. ALL ALARM INDICATING APPLIANCES SHALL SOUND A 'TEMPORAL 3' CODE PATTERN FOR SMOKE ALARM. EACH CO DETECTOR SOUNDER BASE SHALL SOUND A 'TEMPORAL 4' CODE PATTERN WHEN THAT SPECIFIC DETECTOR IS IN ALARM.
12. AFTER ALARM INDICATION, ALL FANS SHALL BE MANUALLY RESET INDEPENDENT FROM F.A.C.P. SYSTEM RESET. PROVIDE ALL REQUIRED HARDWARE ACCESSORIES, MOTOR STARTERS, CONTROLS, POWER AND CONTROL WIRING AND CONDUITS TO PROVIDE INDEPENDENT RESET OF ALL FANS AFTER ALARM INDICATION.
13. INSTALL ALL DEVICES IN ACCORDANCE WITH A.D.A REQUIREMENTS. ALL DEVICES SHALL BE MOUNTED AS FOLLOWS:
    A. - MANUAL PULL STATIONS 48" O.C. TO HANDLE
    B. - ALARM INDICATING APPLIANCE 80" A.F.F.
    C. - VERIFY WITH CONTRACT SPECIFICATIONS FOR ANY DEVIATIONS.
14. ALL STROBES SHALL BE WIRED TO REMAIN ACTIVE AFTER HORNS ARE SILENCED. STROBES SHALL REMAIN ACTIVE UNTIL ALARM IS RESOLVED.
15. PROVIDE AND INSTALL ALL NECESSARY CONTROL MODULES, SYNCHRONIZATION MODULES AND MONITOR MODULES AS REQUIRED BY MANUFACTURER.
16. COORDINATE EXACT LOCATION OF REMOTE ANNUNCIATOR AND F.A.C.P. WITH LOCAL FIRE MARSHALL AND OWNER.

EXTRA MATERIALS:

EM1. REFER TO SECTION 283100 - FIRE DETECTION AND ALARM, SUB-SECTION "EXTRA MATERIALS":

A. PROVIDE TWO (2) OF EACH TYPE OF MULTI-CRITERIA DETECTOR.
B. PROVIDE TWO (2) OF EACH TYPE OF NOTIFICATION APPLIANCE.
C. PROVIDE TWO (2) OF EACH TYPE OF PULL STATION.
D. PROVIDE TWO (2) ADDRESSABLE CONTROL MODULES.

DEVICES LISTED ARE NOT IN ADDITION TO THE DEVICES LISTED IN THE SPECIFICATIONS. LIST IS DUPLICATED FOR CLARIFICATION PURPOSES.

H2M architects + engineers
538 Broad Hollow Road, 4th Floor East
Melville, NY 11747
631.756.8000 • www.h2m.com

CONSULTANTS:

MARK	DATE	DESCRIPTION

STATE OF NEW YORK · ANTHONY W. CIMINO · 092580 · LICENSED PROFESSIONAL ENGINEER

"ALTERATION OF THIS DOCUMENT EXCEPT BY A LICENSED PROFESSIONAL IS ILLEGAL"

DESIGNED BY:	DRAWN BY:	CHECKED BY:	REVIEWED BY:
SMP	SMP	AWK	AWK
PROJECT No.: VGFD2001	DATE: JULY 2022	SCALE: AS SHOWN	

CLIENT

VAILS GATE FIRE DISTRICT

New Storage Building (Phase I)
New Fire Station (Phase II)

872 Blooming Grove Turnpike
New Windsor, NY 12553

CONTRACT

CONTRACT G
GENERAL CONSTRUCTION

STATUS

FINAL BID DOCUMENT

SHEET TITLE

FIRE ALARM LEGEND
PHASE 1

DRAWING No.

FA1 001.00

\\h2m.com\shares\Projects\VGFD\Vails Gate Fire Dept\VGFD2001-(Vails Gate FD New Firehouse)\02-BIM-CADD\Cmc-docs\series\FA1 001.00 - Fire Alarm Legend (Storage Building).dwg Last Modified: Jul 07, 2022 - 4:27pm Plotted on: Jul 15, 2022 - 2:42pm By:pstelicos

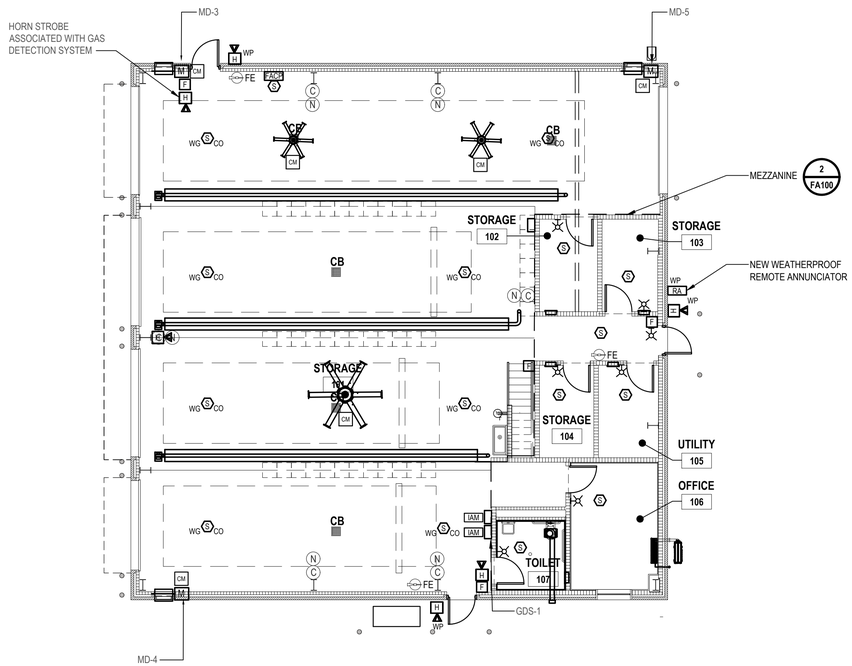

1 **Storage Building Fire Alarm Plan**
SCALE: 1/8" = 1'-0"

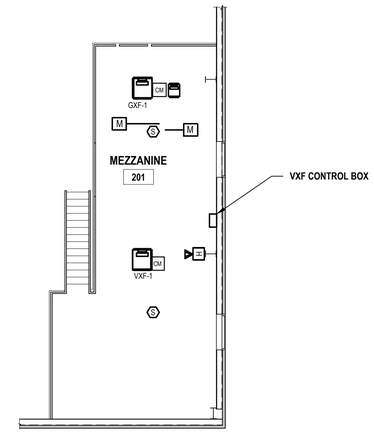

2 **Mezzanine Fire Alarm Plan**
SCALE: 1/8" = 1'-0"

H 2 M architects + engineers

538 Broad Hollow Road, 4th Floor East
Melville, NY 11747
631.756.8000 • www.h2m.com

CONSULTANTS:

MARK	DATE	DESCRIPTION

STATE OF NEW YORK
ANTHONY W. KOENIG, JR.
082258
LICENSED PROFESSIONAL ENGINEER

"ALTERATION OF THIS DOCUMENT EXCEPT BY A LICENSED PROFESSIONAL IS ILLEGAL"

DESIGNED BY:	DRAWN BY:	CHECKED BY:	REVIEWED BY:
SMP	SMP	AWK	AWK
PROJECT No.: VGFD2001	DATE: JULY 2022		SCALE: AS SHOWN

CLIENT
VAILS GATE FIRE DISTRICT

New Storage Building (Phase I)
New Fire Station (Phase II)

872 Blooming Grove Turnpike
New Windsor, NY 12553

CONTRACT
CONTRACT G
GENERAL CONSTRUCTION

STATUS
FINAL BID DOCUMENT

SHEET TITLE
FIRST FLOOR & MEZZANINE FIRE ALARM PLANS PHASE 1

DRAWING No.
FA1 100.00

X:\VGFD\Vails Gate Fire Dept\VGFD2001-Vails Gate FD\New Firehouse\02-BIM-CADD\Cnx-docs\sheet\FA1 100.00 - Fire Alarm Floor Plan.dwg Last Modified: Jul 18, 2022 - 9:56am Plotted on: Jul 18, 2022 - 9:57am By: CPileggi

PHASE II

NEW FIRE STATION

(BASE BID U.N.O.)

C:\Users\jguzman\Documents\VGFD2001_Central21_A_jguzman.rvt

7/18/2022 8:17:07 AM

H2M architects + engineers

538 Broad Hollow Road, 4th Floor East
Melville, NY 11747
631.756.8000 • www.h2m.com

CONSULTANTS:

MARK	DATE	DESCRIPTION

REGISTERED ARCHITECT ROBERT BEE 032389 STATE OF NEW YORK

*ALTERATION OF THIS DOCUMENT EXCEPT BY A LICENSED PROFESSIONAL IS ILLEGAL.

DESIGNED BY:	DRAWN BY:	CHECKED BY:	REVIEWED BY:
KEM	JHG		

PROJECT No:	DATE:	SCALE:
VGFD2001	JULY 2022	AS SHOWN

CLIENT

VAILS GATE FIRE DISTRICT

New Storage Building (Phase I)
New Fire Station (Phase II)

872 Blooming Grove Turnpike
New Windsor, NY 12553

CONTRACT

CONTRACT G
GENERAL CONSTRUCTION

STATUS

FINAL BID DOCUMENT

SHEET TITLE

COVER
NEW FIRE STATION
PHASE 2

DRAWING No.

A2 001.00

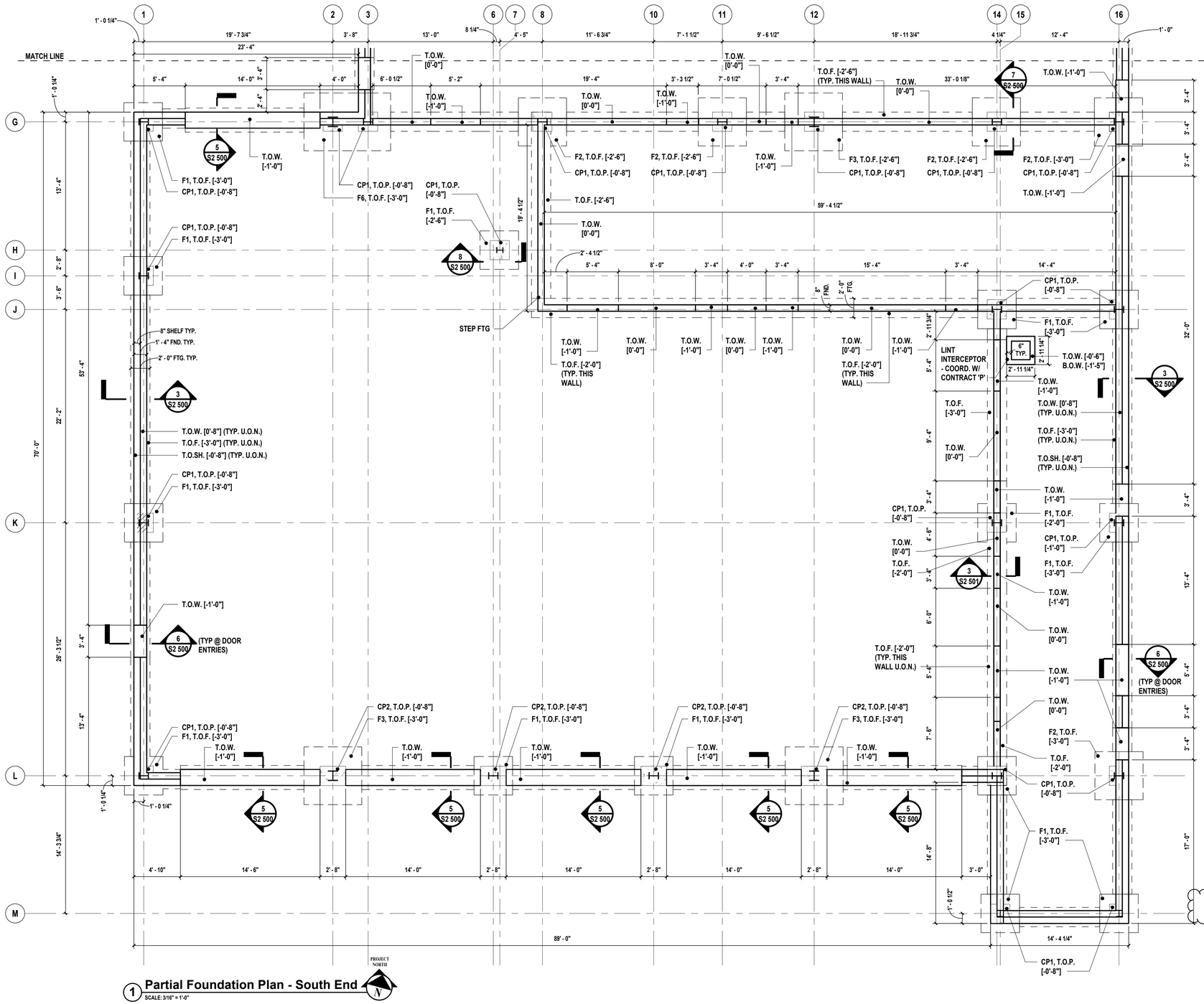

1 Partial Foundation Plan - South End
SCALE: 3/16" = 1'-0"

LEGEND:

U.O.N. =	UNLESS OTHERWISE NOTED
F# =	FOOTING DESIGNATION
T.O.F. =	TOP OF FOOTING
T.O.W. =	TOP OF WALL
T.O.B.S. =	TOP OF BRICK SHELF
T.O.P. =	TOP OF PEDESTAL

DESIGN LOADS:

ALL DESIGN LOADS ARE IN ACCORDANCE WITH 2020 BC-NYS AND ASCE 7-16
STRUCTURAL OCCUPANCY (RISK) CATEGORY IV

1. BUILDING DESIGN LOADS:
   FIRST FLOOR LIVE LOAD = 100 PSF
   FIRST FLOOR COLLATERAL DEAD LOAD = 10 PSF
   MEZZANINE LIVE LOAD = 125 PSF
   MEZZANINE DEAD LOAD = 60 PSF
   SECOND FLOOR LIVE LOAD (OFFICES) = 50 PSF
   SECOND FLOOR LIVE LOAD (CORRIDOR) = 80 PSF
   SECOND FLOOR LIVE LOAD (CONFERENCE, COMPANY, TRAINING, & EXCERCISE ROOM)= 100 PSF
   SECOND FLOOR DEAD LOAD = 60 PSF
   FLAT ROOF LIVE LOAD = 20 PSF
   FLAT ROOF DEAD LOAD = 20 PSF
   ROOF T.C. LIVE LOAD = 20 PSF
   ROOF T.C. DEAD LOAD = 15 PSF
   ROOF B.C. LIVE LOAD = 20 PSF
   ROOF B.C. DEAD LOAD = 15 PSF

2. SNOW LOADS:

GROUND SNOW LOAD,	Pg = 30 PSF
(EXPOSURE)	Ce = 1.0
(THERMAL)	Ct = 1.0
(IMPORTANCE)	Is = 1.20
FLAT ROOF SNOW LOAD	PF = 25.2

3. WIND LOADS:

BASIC WIND SPEED:	125 MPH
EXPOSURE:	C
EXPOSURE ADJUSTMENT FACTOR:	1.53
INTERNAL PRESSURE COEFFICIENT:	Gcpi = ±0.18

FLAT ROOF CONDITION	EXPOSURE B WIND LOADS		EXPOSURE ADJUSTMENT COEFFICIENT		DESIGN WIND LOADS
MWFRS WALL (END ZONE)	24.8 PSF	x	1.53	x =	37.9 PSF
MWFRS WALL (INT. ZONE)	16.4 PSF	x	1.53	x =	25.1 PSF
MWFRS ROOF (END ZONE)	-12.9 PSF	x	1.53	x =	-19.7 PSF
MWFRS ROOF (INT. ZONE)	-7.6 PSF	x	1.53	x =	-11.6 PSF
MWFRS ROOF (UPLIFT)	-29.8 PSF	x	1.53	x =	-45.6 PSF
C&C (WALL END ZONE PRESSURE)	30.4 PSF	x	1.53	x =	46.5 PSF
C&C (WALL END ZONE SUCTION)	-40.7 PSF	x	1.53	x =	-62.3 PSF
C&C (WALL INT. ZONE PRESSURE)	30.4 PSF	x	1.53	x =	46.5 PSF
C&C (WALL INT. ZONE SUCTION)	-33 PSF	x	1.53	x =	-50.5 PSF
C&C (ROOF END ZONE PRESSURE)	12.4 PSF	x	1.53	x =	19.0 PSF
C&C (ROOF END ZONE SUCTION)	-51 PSF	x	1.53	x =	-78.0 PSF
C&C (ROOF INT. ZONE PRESSURE)	12.4 PSF	x	1.53	x =	19.0 PSF
C&C (ROOF INT ZONE SUCTION)	-30.4 PSF	x	1.53	x =	-46.5 PSF

8:12 ROOF CONDITION	EXPOSURE B WIND LOADS		EXPOSURE ADJUSTMENT COEFFICIENT		DESIGN WIND LOADS
MWFRS WALL (END ZONE)	27.9 PSF	x	1.53	x =	42.7 PSF
MWFRS WALL (INT. ZONE)	22.2 PSF	x	1.53	x =	34.0 PSF
MWFRS ROOF (END ZONE)	19.1 PSF	x	1.53	x =	29.2 PSF
MWFRS ROOF (INT. ZONE)	15.2 PSF	x	1.53	x =	23.3 PSF
MWFRS ROOF (UPLIFT)	-16.9 PSF	x	1.53	x =	-25.9 PSF
C&C (WALL END ZONE PRESSURE)	30.4 PSF	x	1.53	x =	46.5 PSF
C&C (WALL END ZONE SUCTION)	-40.7 PSF	x	1.53	x =	-62.3 PSF
C&C (WALL INT. ZONE PRESSURE)	30.4 PSF	x	1.53	x =	46.5 PSF
C&C (WALL INT. ZONE SUCTION)	-33 PSF	x	1.53	x =	-50.5 PSF
C&C (ROOF END ZONE PRESSURE)	27.8 PSF	x	1.53	x =	42.5 PSF
C&C (ROOF END ZONE SUCTION)	-68.9 PSF	x	1.53	x =	-105.4 PSF
C&C (ROOF INT. ZONE PRESSURE)	27.8 PSF	x	1.53	x =	42.5 PSF
C&C (ROOF INT ZONE SUCTION)	-51 PSF	x	1.53	x =	-78.0 PSF

4. SEISMIC CRITERIA:
   SITE CLASS: C
   (IMPORTANCE) Ie = 1.50
   Fa = 1.3 FV = 1.5
   Ss = 0.242%g S1 = 0.058%g
   Sms = 0.314 Sm1 = 0.086
   Sds = 0.209 Sd1 = 0.058
   SEISMIC DESIGN CATEGORY: C
   EQUIVALENT LATERAL FORCE PROCEDURE:
   STEEL SYSTEMS NOT SPECIFICALLY DETAILED FOR SEISMIC RESISTANCE
   R = 3.0

5. SOIL BEARING CAPACITY: 2 TONS/S.F.
   AS REFERENCED BY SUB-SURFACE SOILS INVESTIGATION PERFORMED BY CARLIN-SIMPSON (04/12/2021)

6. AS PER FIGURE 1611.1 NYS BC, RAIN INTENSITY = 2.75 IN/HR

FOUNDATION PLAN NOTES:

1. ELEVATIONS SHOWN THUS [ ] ARE RELATIVE TO FINISHED FIRST FLOOR ELEVATION, TAKEN AS DATUM = [0'-0"] (EQUIVALENT TO 266.00' ON CIVIL DWGS)
2. PREPARE SUBGRADE AS RECOMMENDED IN SUB-SURFACE INVESTIGATION REPORT BY CARLIN-SIMPSON (4/12/2021)
3. ALL EXCAVATED EARTH AND UNSUITABLE SOILS SHALL BE REPLACED WITH CONTROLLED FILL AS PER SPECIFICATION SECTION 312323.13.
4. ALL CONCRETE PEDESTALS SHALL BE 2'-0"x2'-0" AND CONSTRUCTED AS PER DETAIL UNLESS OTHERWISE NOTED.
5. ALL CONCRETE PEDESTALS AND COLUMN FOOTINGS SHALL BE CENTERED ON THE COLUMN UNLESS OTHERWISE NOTED.
6. CONTRACTOR SHALL COORDINATE SIZE AND LOCATIONS OF ALL REQUIRED PIPING AND CONDUIT PENETRATIONS THROUGH FOUNDATION WALL WITH ALL OTHER CONTRACTS. PROVIDE PIPE SLEEVES AND REINFORCEMENT AROUND PENETRATIONS AS PER DETAIL 8 ON SHEET S2 501.
7. REFER TO 'A' DWGS FOR WATERPROOFING REQUIREMENTS.
8. COORDINATE LOCATIONS OF REINFORCEMENT DOWELS INTO BUILDING WALLS WITH MASONRY TRADE.
9. EXISTING FILL IS PRESENT THROUGHOUT THE SITE OF DEPTHS RANGING FROM 5'-0" TO 8'-5" BELOW EXISTING GROUND SURFACE. THE EXISTING FILL IS NOT A SUITABLE BEARING MATERIAL FOR THE NEW BUILDING FOUNDATIONS AND FLOOR SLABS. WHERE EXISTING FILL IS ENCOUNTERED IN THE BUILDING AREAS, IT SHALL BE COMPLETELY REMOVED AND REPLACED WITH CONTROLLED FILL. EXCAVATION OF THE EXISTING FILL WILL LIKELY EXTEND 1 TO 2 FEET BELOW THE GROUNDWATER TABLE, THEREFORE DEWATERING WITH SUMPS AND PUMPS WILL BE NECESSARY. THE REMOVAL OF THE EXISTING FILL FROM THE BUILDING FOOTPRINT SHALL BE PERFORMED UNDER THE FULL TIME INSPECTION OF CARLIN-SIMPSON & ASSOCIATES OR A QUALIFIED GEOTECHINICAL ENGINEEER.

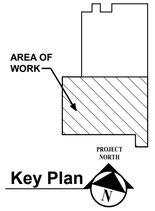

Key Plan

H2M architects + engineers
538 Broad Hollow Road, 4th Floor East
Melville, NY 11747
631.756.8000 • www.h2m.com

CONSULTANTS:

MARK	DATE	DESCRIPTION
3	02/02/2023	REVS. PER TOWN COMMENTS

STATE OF NEW YORK · SCOTT D. LEHN · 087143 · LICENSED PROFESSIONAL ENGINEER

"ALTERATION OF THIS DOCUMENT EXCEPT BY A LICENSED PROFESSIONAL IS ILLEGAL"

DESIGNED BY:	DRAWN BY:	CHECKED BY:	REVIEWED BY:
MDH	MDH		
PROJECT No: VGFD2001	DATE: JULY 2022		SCALE: AS SHOWN

CLIENT
VAILS GATE FIRE DISTRICT

New Storage Building (Phase I)
New Fire Station (Phase II)

872 Blooming Grove Turnpike
New Windsor, NY 12553

CONTRACT
CONTRACT G
GENERAL CONSTRUCTION

STATUS
FINAL BID DOCUMENT

SHEET TITLE
STRUCTURAL
PARTIAL FOUNDATION PLAN AND DESIGN LOADS

DRAWING No.
S2 100.03

C:\Users\jguzman\Documents\VGFD2001-Central21-S_jguzmanBK622.rvt
2/2/2023 3:35:26 PM

LEGEND:

U.O.N. =	UNLESS OTHERWISE NOTED
F# =	FOOTING DESIGNATION
T.O.F. =	TOP OF FOOTING
T.O.W. =	TOP OF WALL
T.O.B.S. =	TOP OF BRICK SHELF
T.O.P. =	TOP OF PEDESTAL

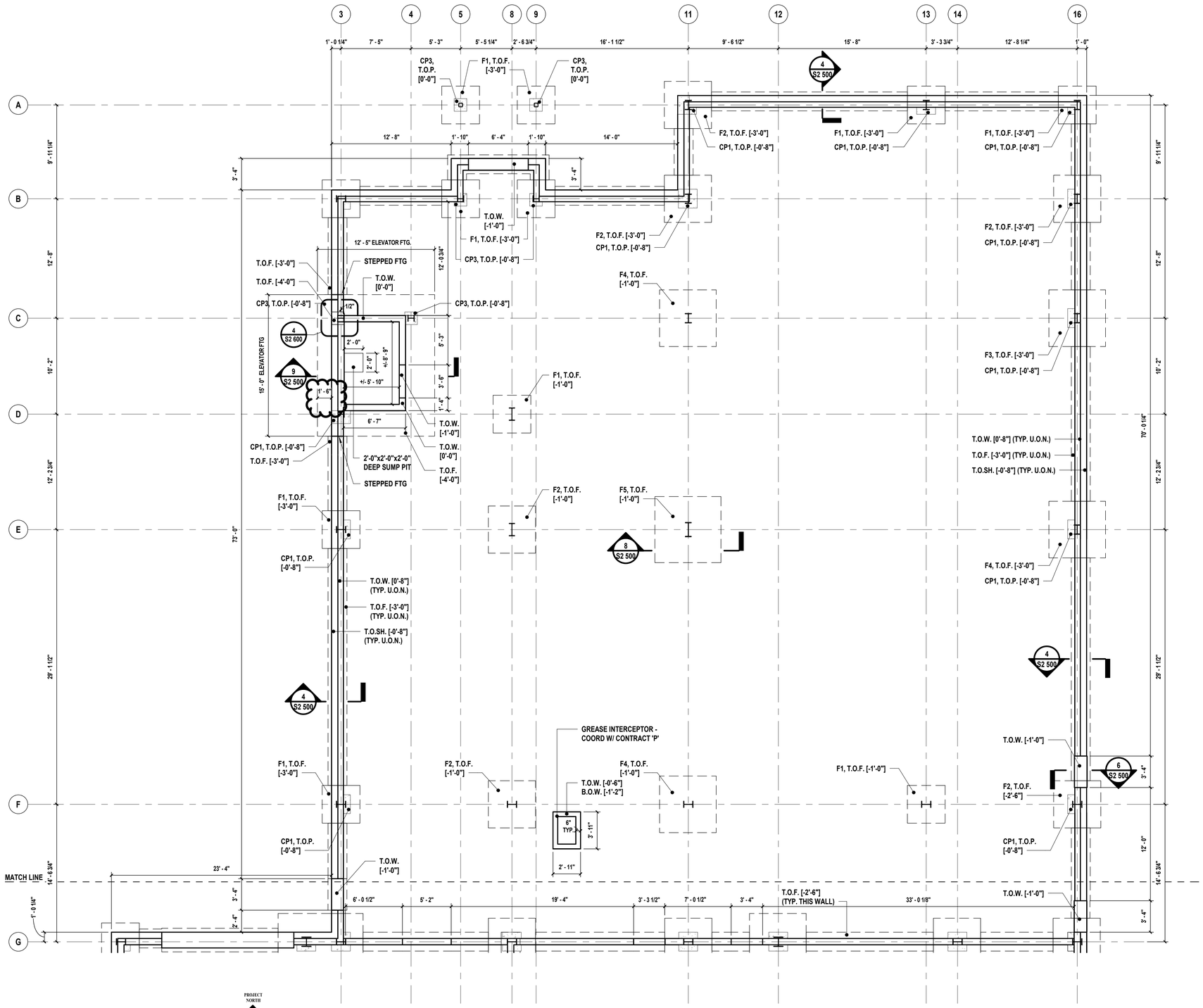

1 Partial Foundation Plan - North End

SCALE: 3/16" = 1'-0"

PROJECT NORTH

FOUNDATION PLAN NOTES:

1. ELEVATIONS SHOWN THUS [ ] ARE RELATIVE TO FINISHED FIRST FLOOR ELEVATION, TAKEN AS DATUM = [0'-0"] (EQUIVALENT TO 266.00' ON CIVIL DWGS)
2. PREPARE SUBGRADE AS RECOMMENDED IN SUB-SURFACE INVESTIGATION REPORT BY CARLIN-SIMPSON (4/12/2021)
3. ALL EXCAVATED EARTH AND UNSUITABLE SOILS SHALL BE REPLACED WITH CONTROLLED FILL AS PER SPECIFICATION SECTION 312323.13.
4. ALL CONCRETE PEDESTALS SHALL BE 2'-0"x2'-0" AND CONSTRUCTED AS PER DETAIL UNLESS OTHERWISE NOTED.
5. ALL CONCRETE PEDESTALS AND COLUMN FOOTINGS SHALL BE CENTERED ON THE COLUMN UNLESS OTHERWISE NOTED.
6. CONTRACTOR SHALL COORDINATE SIZE AND LOCATIONS OF ALL REQUIRED PIPING AND CONDUIT PENETRATIONS THROUGH FOUNDATION WALL WITH ALL OTHER CONTRACTS. PROVIDE PIPE SLEEVES AND REINFORCEMENT AROUND PENETRATIONS AS PER DETAIL 8 ON SHEET S2 501.
7. REFER TO 'A' DWGS FOR WATERPROOFING REQUIREMENTS.
8. COORDINATE LOCATIONS OF REINFORCEMENT DOWELS INTO BUILDING WALLS WITH MASONRY TRADE.
9. EXISTING FILL IS PRESENT THROUGHOUT THE SITE OF DEPTHS RANGING FROM 5'-0" TO 8'-5" BELOW EXISTING GROUND SURFACE. THE EXISTING FILL IS NOT A SUITABLE BEARING MATERIAL FOR THE NEW BUILDING FOUNDATIONS AND FLOOR SLABS. WHERE EXISTING FILL IS ENCOUNTERED IN THE BUILDING AREAS, IT SHALL BE COMPLETELY REMOVED AND REPLACED WITH CONTROLLED FILL. EXCAVATION OF THE EXISTING FILL WILL LIKELY EXTEND 1 TO 2 FEET BELOW THE GROUNDWATER TABLE, THEREFORE DEWATERING WITH SUMPS AND PUMPS WILL BE NECESSARY. THE REMOVAL OF THE EXISTING FILL FROM THE BUILDING FOOTPRINT SHALL BE PERFORMED UNDER THE FULL TIME INSPECTION OF CARLIN-SIMPSON & ASSOCIATES OR A QUALIFIED GEOTECHINICAL ENGINEEER.
10. CONTRACTOR SHALL COORDINATE ELEVATOR SHAFT SIZE WITH APPROVED ELEVATOR FABRICATOR'S SHOP DRAWINGS AND INSTALLATION REQUIREMENT.

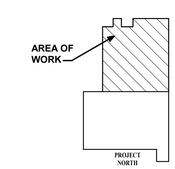

Key Plan

H2M architects + engineers

538 Broad Hollow Road, 4th Floor East
Melville, NY 11747
631.756.8000 • www.h2m.com

CONSULTANTS:

MARK	DATE	DESCRIPTION
3	02/02/2023	REVS. PER TOWN COMMENTS

STATE OF NEW YORK · SCOTT D. LEWIN · 087149 · LICENSED PROFESSIONAL ENGINEER

"ALTERATION OF THIS DOCUMENT EXCEPT BY A LICENSED PROFESSIONAL IS ILLEGAL"

DESIGNED BY:	DRAWN BY:	CHECKED BY:	REVIEWED BY:
MDH	MDH		

PROJECT No:	DATE:	SCALE:
VGFD2001	JULY 2022	AS SHOWN

CLIENT

VAILS GATE FIRE DISTRICT

New Storage Building (Phase I)
New Fire Station (Phase II)

872 Blooming Grove Turnpike
New Windsor, NY 12553

CONTRACT

CONTRACT G
GENERAL CONSTRUCTION

STATUS

FINAL BID DOCUMENT

SHEET TITLE

STRUCTURAL
PARTIAL FOUNDATION PLAN - NORTH END

DRAWING No.

S2 101.03

C:\Users\jgusman\Documents\VGFD2001-Central21-S_jgusmanBK622.rvt

2/2/2023 3:35:28 PM

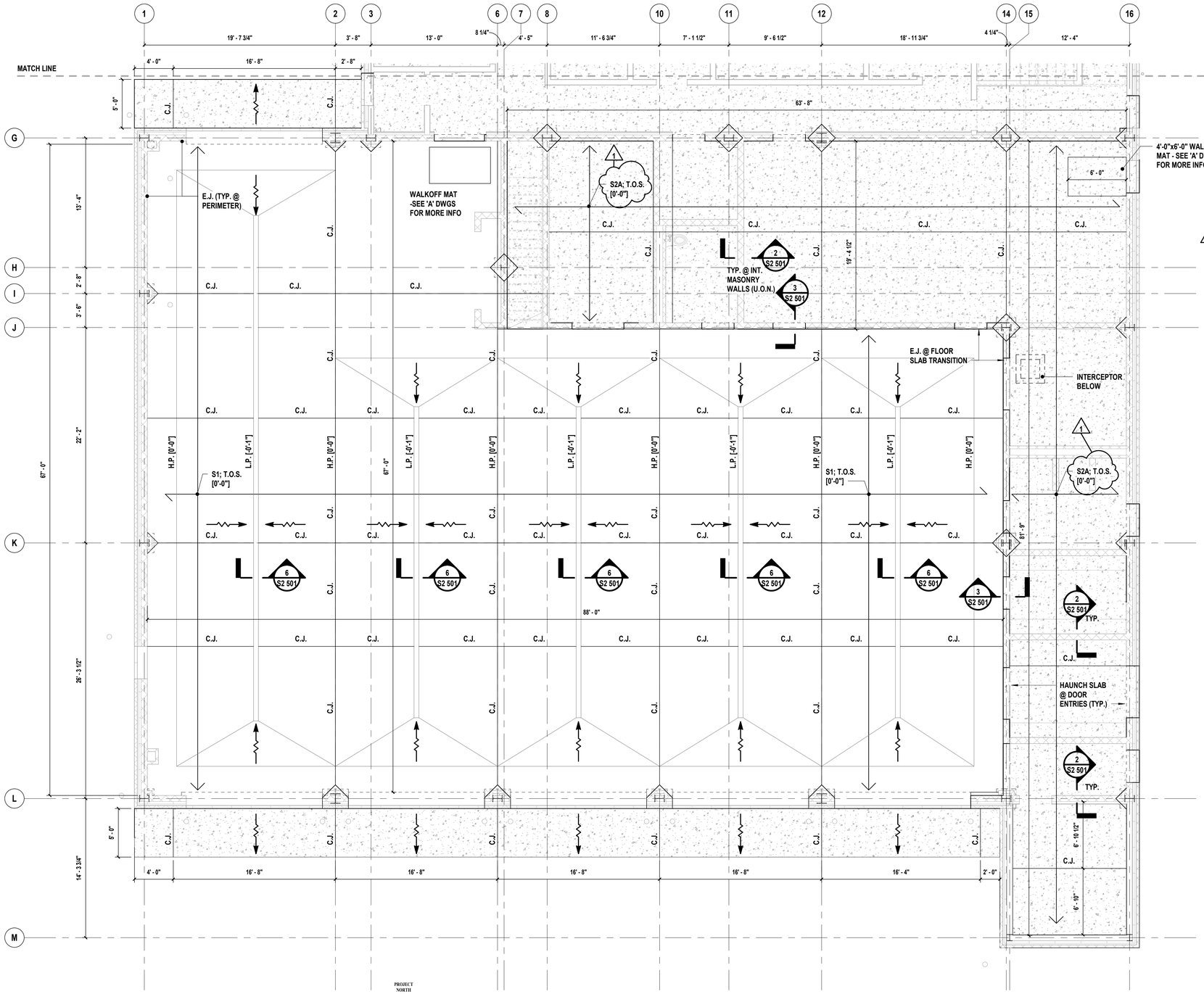

1 **Partial First Floor Slab Plan - South End**
SCALE: 3/16" = 1'-0"

PROJECT NORTH

LEGEND:

C.J. = CONTROL JOINT
E.J. = EXPANSION JOINT
E.O.S. = EDGE OF SLAB
T.O.S. = TOP OF SLAB
U.O.N. = UNLESS OTHERWISE NOTED
H.P. = HIGH POINT OF PITCHED SLAB
L.P. = LOW POINT OF PITCHED SLAB
INDICATES PITCH DIRECTION OF SLAB

SLAB NOTES:

1. ELEVATIONS SHOWN THUS [ ] ARE RELATIVE TO FINISHED FIRST FLOOR DATUM ELEVATION [0'-0"] (EQUIVALENT TO 266.00' ON CIVIL DWGS).
2. S1 — INDICATES SPAN ON 8" CONCRETE SLAB ON GRADE REINFORCED WITH (2) LAYERS OF 6x6-W4.0xW4.0 W.W.M. W/ RADIANT HEAT TUBES
3. S2A — INDICATES SPAN ON 6" CONCRETE SLAB ON GRADE REINFORCED WITH 6x6-W2.9xW2.9 W.W.M. W/ RADIANT HEAT TUBES
4. PROVIDE 1/2" PRE-MOLDED EXPANSION JOINT AROUND PERIMETER OF CONCRETE SLAB ON GRADE WHERE IT ABUTS THE FOUNDATION WALL OF THE BUILDING.

MASONRY NOTES:

1. ALL VERTICAL MASONRY WALL REINFORCEMENT SHALL BE #6 BARS SPACED AT MAXIMUM OF 32" O.C., TYP. UNLESS OTHERWISE NOTED. PROVIDE #5 @ 48" O.C. FOR NON-LOAD BEARING CMU PARTITIONS.
2. THE FIRST CELL ADJACENT TO MASONRY OPENINGS, AS WELL AS ALL CORNERS, SHALL CONTAIN (1) CONT. #5 BAR, TYP. AT EACH SIDE OF OPENING.
3. FILL ALL MASONRY CELLS CONTAINING REINFORCEMENT SOLID WITH MORTAR, TYP.
4. REFER TO 'A' DWGS AND SPECIFICATIONS FOR ADDITIONA REQUIREMENTS NOT OUTLINED HERE, INCLUDING HORIZONTAL REINFORCEMENT AND BRICK TIES.
5. ALL VERTICAL REINFORCEMENT INTERRUPTED BY STRUCTURAL STEEL SHALL BE WELDED TO TOP OF STEEL MEMBERS, TYP.
6. COORDINATE PLACEMENT OF VERTICAL WALL DOWELS EMBEDDED INTO FOUNDATION WALL WITH CELLS OF MASONRY WALL. DOWEL SPACING TO MATCH SPACING OF VERTICAL REINFORCEMENT IN WALLS, TYP.

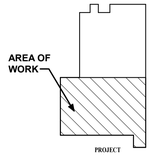

Key Plan

PROJECT NORTH

H2M architects + engineers
538 Broad Hollow Road, 4th Floor East
Melville, NY 11747
631.756.8000 • www.h2m.com

CONSULTANTS:

MARK	DATE	DESCRIPTION
1	8/24/2022	ADDENDUM #1

STATE OF NEW YORK · SCOTT D. LEHR · 067145 · LICENSED PROFESSIONAL ENGINEER

*ALTERATION OF THIS DOCUMENT EXCEPT BY A LICENSED PROFESSIONAL IS ILLEGAL.

DESIGNED BY:	DRAWN BY:	CHECKED BY:	REVIEWED BY:
MDH	MDH		

PROJECT No:	DATE:	SCALE:
VGFD2001	JULY 2022	AS SHOWN

CLIENT

VAILS GATE FIRE DISTRICT

New Storage Building (Phase I)
New Fire Station (Phase II)

872 Blooming Grove Turnpike
New Windsor, NY 12553

CONTRACT
CONTRACT G
GENERAL CONSTRUCTION

STATUS
FINAL BID DOCUMENT

SHEET TITLE
STRUCTURAL
PARTIAL SLAB PLAN - SOUTH END

DRAWING No.
S2 110.01

C:\Users\mhomberger\Documents\VGFD2001-CentralZ1-S_mhomberger\FD145.rvt

8/23/2022 8:59:05 AM

LEGEND:

C.J. = CONTROL JOINT
E.J. = EXPANSION JOINT
E.O.S. = EDGE OF SLAB
T.O.S. = TOP OF SLAB
U.O.N. = UNLESS OTHERWISE NOTED
H.P. = HIGH POINT OF PITCHED SLAB
L.P. = LOW POINT OF PITCHED SLAB

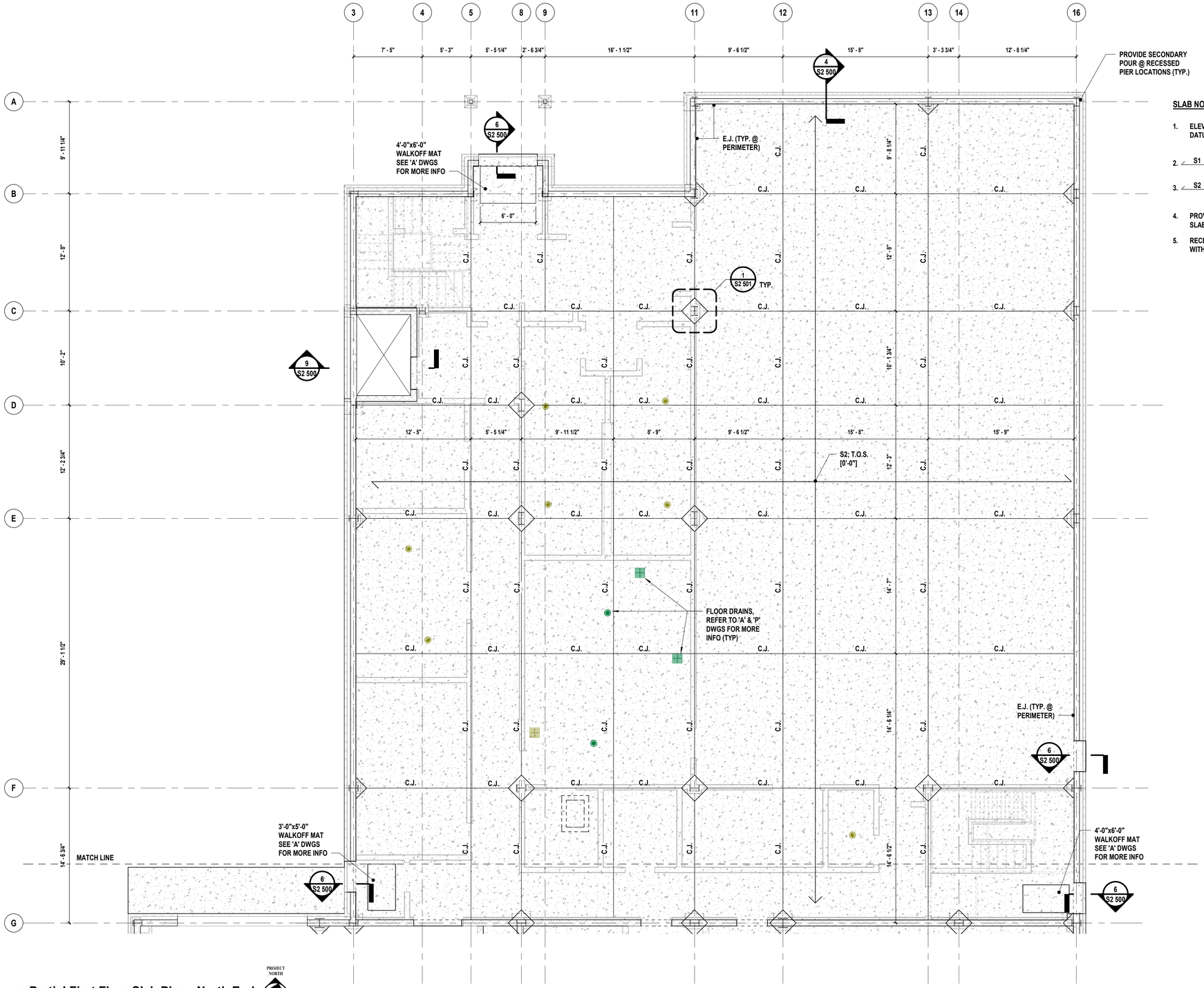

1 **Partial First Floor Slab Plan - North End**
SCALE: 3/16" = 1'-0"

SLAB NOTES:

1. ELEVATIONS SHOWN THUS [ ] ARE RELATIVE TO FINISHED FIRST FLOOR DATUM ELEVATION [0'-0"] (EQUIVALENT TO 266.00' ON CIVIL DWGS).
2. S1 — INDICATES SPAN ON 8" CONCRETE SLAB ON GRADE REINFORCED WITH (2) LAYERS OF 6x6-W4.0xW4.0 W.W.M. W/ RADIANT HEAT TUBES
3. S2 — INDICATES SPAN ON 6" CONCRETE SLAB ON GRADE REINFORCED WITH 6x6-W2.9xW2.9 W.W.M.
4. PROVIDE 1/2" PRE-MOLDED EXPANSION JOINT AROUND PERIMETER OF CONCRETE SLAB ON GRADE WHERE IT ABUTS THE FOUNDATION WALL OF THE BUILDING.
5. RECESS FLOOR SLAB AT ENTRANCE MAT LOCATIONS. COORDINATE SIZE & DEPTH WITH ARCHITECTURAL DRAWINGS.

H2M architects + engineers
538 Broad Hollow Road, 4th Floor East
Melville, NY 11747
631.756.8000 • www.h2m.com

CONSULTANTS:

MARK	DATE	DESCRIPTION

STATE OF NEW YORK · SCOTT D LEHN · 087145 · LICENSED PROFESSIONAL ENGINEER

*ALTERATION OF THIS DOCUMENT EXCEPT BY A LICENSED PROFESSIONAL IS ILLEGAL.

DESIGNED BY:	DRAWN BY:	CHECKED BY:	REVIEWED BY:
MDH	MDH		

PROJECT No:	DATE:	SCALE:
VGFD2001	JULY 2022	AS SHOWN

CLIENT

VAILS GATE FIRE DISTRICT

New Storage Building (Phase I)
New Fire Station (Phase II)

872 Blooming Grove Turnpike
New Windsor, NY 12553

CONTRACT
CONTRACT G
GENERAL CONSTRUCTION

STATUS
FINAL BID DOCUMENT

SHEET TITLE
STRUCTURAL
PARTIAL SLAB PLAN - NORTH END

DRAWING No.
S2 111.00

C:\Users\mhomberger\Documents\VGFD2001-Central21-S_mhomberger.rvt
7/14/2022 4:45:20 PM

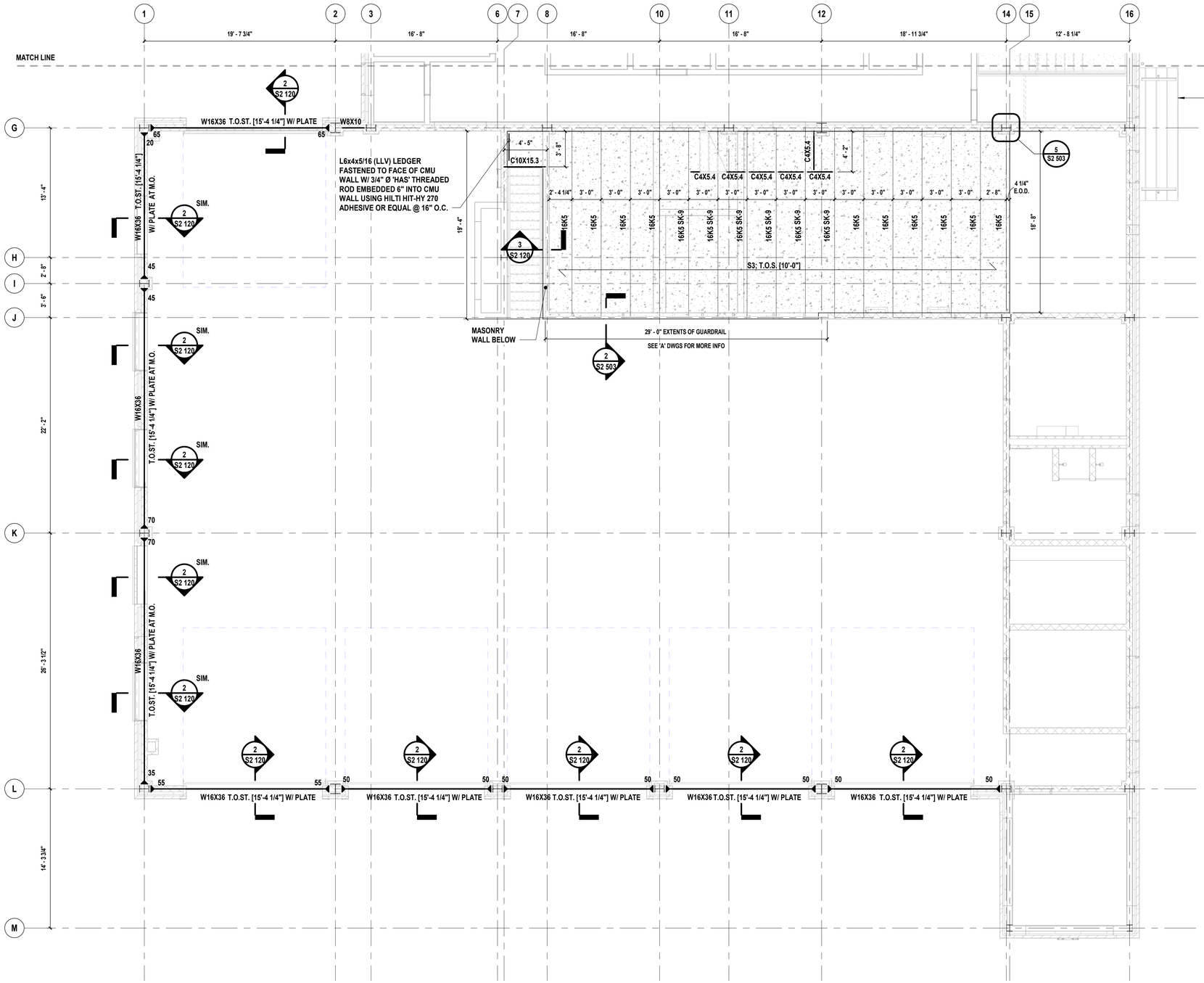

1 Mezzanine Framing Plan
SCALE: 3/16" = 1'-0"

LEGEND:

T.O.ST. = TOP OF STEEL
T.O.S. = TOP OF SLAB
E.O.S. = EDGE OF SLAB
E.O.D. = EDGE OF DECK
U.O.N. = UNLESS OTHERWISE NOTED

MEZZANINE NOTES:

1. TOP OF STEEL SHALL BE SET AT [9'-8"] ABOVE FINISHED FIRST FLOOR ELEVATION, UNLESS OTHERWISE NOTED AS THUS [ ].
2. S3 — INDICATES SPAN OF 4" CONCRETE SLAB, REINFORCED WITH 6x6-W2.9xW2.9 W.W.F. AND 1.5C 20GA METAL FORM DECK AS MANUFACTURED BY VULCRAFT NUCOR OR APPROVED EQUAL
3. INSTALL BRIDGING FOR BAR JOISTS AS PER S.J.I. REQUIREMENTS.
4. EDGE OF ALL FLOOR SLABS SHALL BE INSTALLED WITH CONTINUOUS 12GA. POURSTOPS AND 20GA. CELL CLOSURES (WHERE APPLICABLE), UNLESS OTHERWISE SHOWN IN DETAIL.
5. INDICATES BEAM TO COLUMN MOMENT CONNECTION WITH THE NUMBER REPRESENTING THE ASD MOMENT CAPACITY IN FT-KIPS
6. STEEL CONNECTION PIECE DETAILS SHALL BE SUBMITTED WITH CALCULATIONS SIGNED AND SEALED BY A NEW YORK STATE LICENSED PROFESSIONAL ENGINEER. CONNECTION DESIGNER SHALL DESIGN ALL MOMENT CONNECTIONS AND SIMPLE SHEAR CONNECTIONS NOT SHOWN ON THE DRAWINGS. WHERE DESIGN SHEAR REACTION IS NOT LISTED ON DRAWINGS, IT SHALL BE DETERMINED BY THE CONNECTION DESIGNER AS THE MAXIMUM REACTION RESULTING FROM THE INDICATED BEAM SECTION BEING FULLY LOADED WITH MAXIMUM ALLOWABLE UNIFORM LOADS AS SPECIFIED IN AISC SPECIFICATION. WHERE AXIAL FORCE IN BEAMS IS NOT LISTED ON DRAWINGS, IT SHALL BE TAKEN AS 10KIPS ASD. ALL CONNECTIONS SHALL BE DESIGNED CONSIDERING AXIAL, SHEAR AND MOMENT FORCES SIMULTANEOULSY AS REQUIRED BY BUILDING CODE. SEE STRUCTURAL STEEL SPECIFICATION FOR ADDITIONAL LOADING DESIGN REQUIREMENTS.

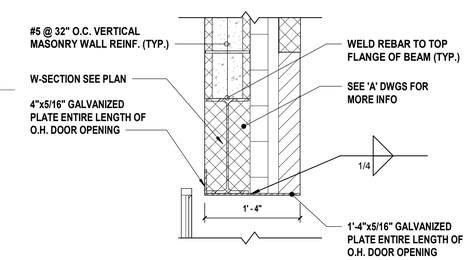

2 Section at Overhead Door
SCALE: 1" = 1'-0"

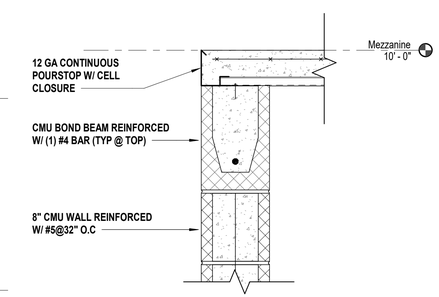

3 Section at Mezzanine
SCALE: 1 1/2" = 1'-0"

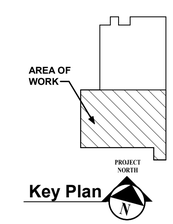

Key Plan

H2M architects + engineers
538 Broad Hollow Road, 4th Floor East
Melville, NY 11747
631.756.8000 • www.h2m.com

CONSULTANTS:

MARK	DATE	DESCRIPTION

STATE OF NEW YORK · SCOTT D LEHR · 087145 · LICENSED PROFESSIONAL ENGINEER

*ALTERATION OF THIS DOCUMENT EXCEPT BY A LICENSED PROFESSIONAL IS ILLEGAL.

DESIGNED BY:	DRAWN BY:	CHECKED BY:	REVIEWED BY:
MDH	MDH		
PROJECT No: VGFD2001	DATE: JULY 2022		SCALE: AS SHOWN

CLIENT
VAILS GATE FIRE DISTRICT

New Storage Building (Phase I)
New Fire Station (Phase II)

872 Blooming Grove Turnpike
New Windsor, NY 12553

CONTRACT
CONTRACT G
GENERAL CONSTRUCTION

STATUS
FINAL BID DOCUMENT

SHEET TITLE
STRUCTURAL
MEZZANINE FRAMING PLAN - SOUTH END

DRAWING No.
S2 120.00

C:\Users\mhomberger\Documents\VGFD2001-Central21-S_mhomberger.rvt
7/14/2022 4:45:22 PM

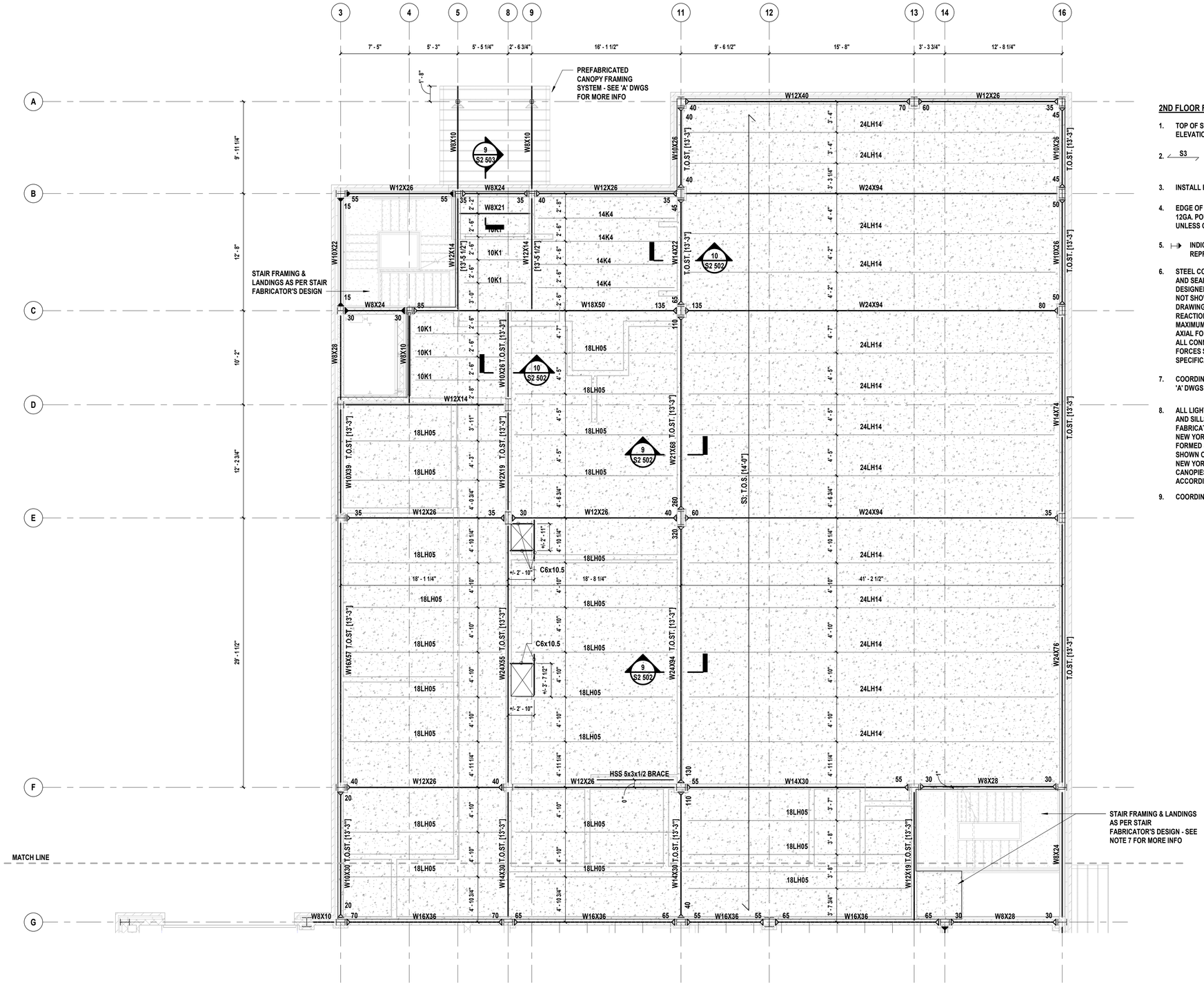

1 Partial Second Floor Framing Plan - North End

SCALE: 3/16" = 1'-0"

PROJECT NORTH

LEGEND:

T.O.ST. = TOP OF STEEL
T.O.S. = TOP OF SLAB
E.O.S. = EDGE OF SLAB
E.O.D. = EDGE OF DECK
U.O.N. = UNLESS OTHERWISE NOTED

2ND FLOOR FRAMING NOTES:

1. TOP OF STEEL SHALL BE SET AT [13'-8"] ABOVE FINISHED FIRST FLOOR ELEVATION, UNLESS OTHERWISE NOTED AS THUS [ ].
2. S3 — INDICATES SPAN OF 4" CONCRETE SLAB, REINFORCED WITH 6x6-W2.9xW2.9 W.W.F. AND 1.5C 20GA METAL FORM DECK AS MANUFACTURED BY VULCRAFT NUCOR OR APPROVED EQUAL
3. INSTALL BRIDGING FOR BAR JOISTS AS PER S.J.I. REQUIREMENTS.
4. EDGE OF ALL FLOOR SLABS SHALL BE INSTALLED WITH CONTINUOUS 12GA. POURSTOPS AND 20GA. CELL CLOSURES (WHERE APPLICABLE), UNLESS OTHERWISE SHOWN IN DETAIL.
5. INDICATES BEAM TO COLUMN MOMENT CONNECTION WITH THE NUMBER REPRESENTING THE ASD MOMENT CAPACITY IN FT-KIPS
6. STEEL CONNECTION PIECE DETAILS SHALL BE SUBMITTED WITH CALCULATIONS SIGNED AND SEALED BY A NEW YORK STATE LICENSED PROFESSIONAL ENGINEER. CONNECTION DESIGNER SHALL DESIGN ALL MOMENT CONNECTIONS AND SIMPLE SHEAR CONNECTIONS NOT SHOWN ON THE DRAWINGS. WHERE DESIGN SHEAR REACTION IS NOT LISTED ON DRAWINGS, IT SHALL BE DETERMINED BY THE CONNECTION DESIGNER AS THE MAXIMUM REACTION RESULTING FROM THE INDICATED BEAM SECTION BEING FULLY LOADED WITH MAXIMUM ALLOWABLE UNIFORM LOADS AS SPECIFIED IN AISC SPECIFICATION. WHERE AXIAL FORCE IN BEAMS IS NOT LISTED ON DRAWINGS, IT SHALL BE TAKEN AS 10KIPS ASD. ALL CONNECTIONS SHALL BE DESIGNED CONSIDERING AXIAL, SHEAR AND MOMENT FORCES SIMULTANEOULSY AS REQUIRED BY BUILDING CODE. SEE STRUCTURAL STEEL SPECIFICATION FOR ADDITIONAL LOADING DESIGN REQUIREMENTS.
7. COORDINATE DIMENSIONS OF STAIR LANDING FRAMING WITH STAIR MANUFACTURER. SEE 'A' DWGS FOR ADDITIONAL INFORMATION.
8. ALL LIGHT GAUGE EXTERIOR STUD WALLS, BOX HEADERS, CANOPY CONNECTION POINTS, AND SILLS SHALL BE DESIGNED BY THE COLD FORMED STEEL FABRICATOR. THE FABRICATOR'S ENGINEER SHALL SUBMIT A FULL SET OF CALCULATIONS AFFIXED WITH A NEW YORK STATE P.E.'S SIGN & SEAL TO THE A/E OF RECORD TO REVIEW. DESIGN OF COLD-FORMED STEEL FRAMING SHALL INCLUDE CONSIDERATION FOR ALL APPLICABLE LOADS AS SHOWN ON SHEET S2 100.00 AND SHALL BE IN CONFORMANCE WITH THE BUILDING CODE OF NEW YORK STATE. EXTERIOR CLADDING SYSTEMS AND ANCILLARY STRUCTURES INCLUDING CANOPIES SUPPORTED BY THE COLD FORMED STEEL SYSTEM SHALL BE CONSIDERED ACCORDINGLY. REFER TO SPECIFICATION 054000 FOR ADDITIONAL REQUIREMENTS.
9. COORDINATE ALL FLOOR OPENINGS WITH ARCHITECTURAL AND MEP DRAWINGS

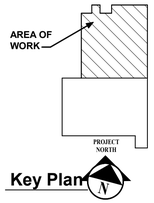

Key Plan

H2M architects + engineers
538 Broad Hollow Road, 4th Floor East
Melville, NY 11747
631.756.8000 • www.h2m.com

CONSULTANTS:

MARK	DATE	DESCRIPTION

STATE OF NEW YORK · SCOTT D LEHR · 087145 · LICENSED PROFESSIONAL ENGINEER

*ALTERATION OF THIS DOCUMENT EXCEPT BY A LICENSED PROFESSIONAL IS ILLEGAL.

DESIGNED BY:	DRAWN BY:	CHECKED BY:	REVIEWED BY:
MDH	MDH		
PROJECT No: VGFD2001	DATE: JULY 2022		SCALE: AS SHOWN

CLIENT

VAILS GATE FIRE DISTRICT

New Storage Building (Phase I)
New Fire Station (Phase II)

872 Blooming Grove Turnpike
New Windsor, NY 12553

CONTRACT

ALL CONTRACTS

STATUS

FINAL BID DOCUMENT

SHEET TITLE

STRUCTURAL
SECOND FLOOR FRAMING PLAN - NORTH END

DRAWING No.

S2 121.00

C:\Users\mhomberger\Documents\VGFD2001-Central21-S_mhomberger.rvt

7/14/2022 4:45:23 PM

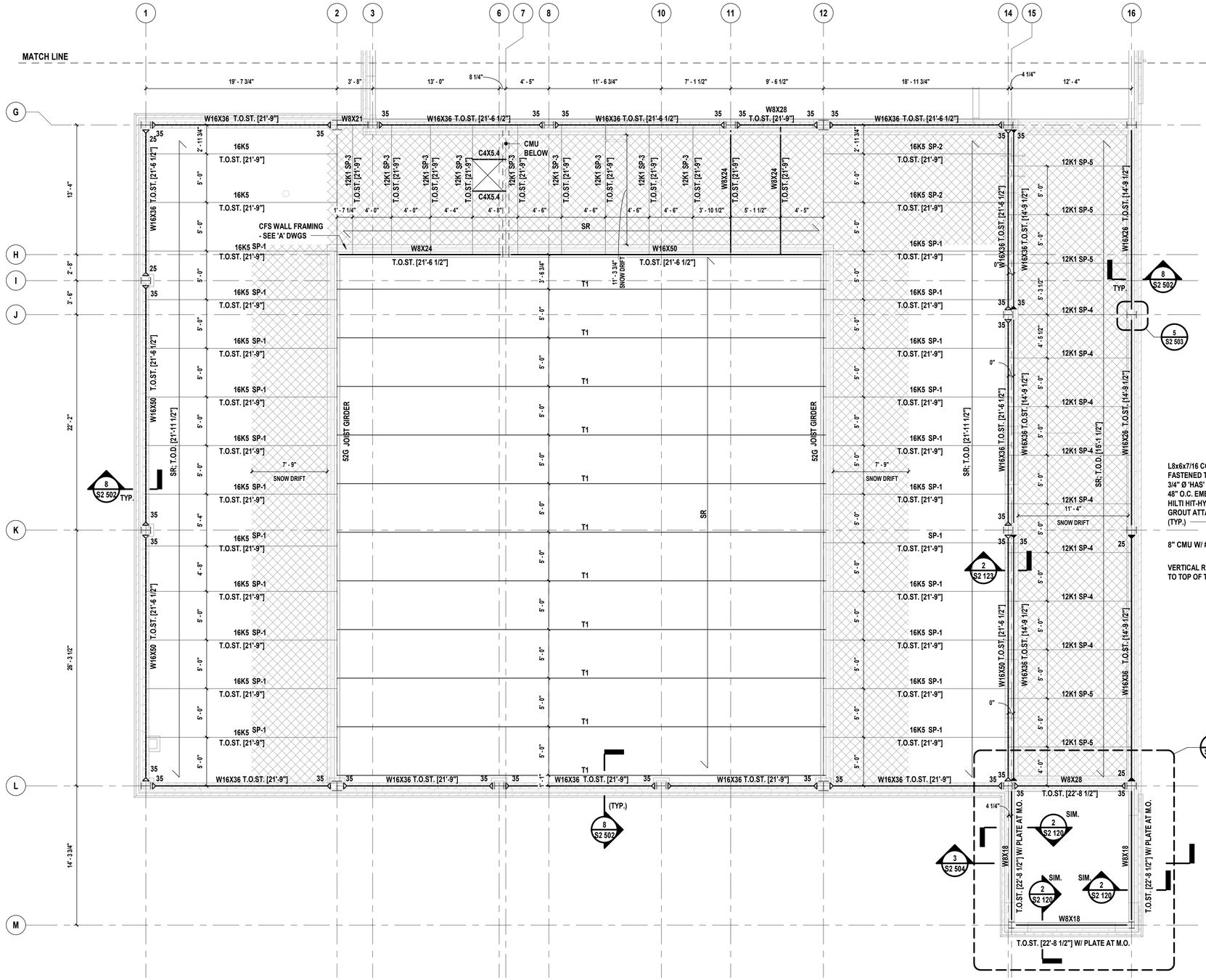

1 Partial Roof Framing Plan - South End
SCALE: 3/16" = 1'-0"

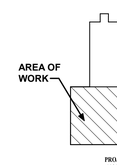

Key Plan

LEGEND:

T.O.ST. = TOP OF STEEL
E.O.D. = EDGE OF DECK
U.O.N. = UNLESS OTHERWISE NOTED

ROOF FRAMING NOTES:

1. TOP OF STEEL SHALL BE SET AT [15'-0"] ABOVE FINISHED FIRST FLOOR ELEVATION, UNLESS OTHERWISE NOTED AS THUS [ ].
2. SR — INDICATES SPAN OF 1.5B 20GA. METAL ROOF DECK AS MANUFACTURED BY VULCRAFT NUCOR OR APPROVED EQUAL.
3. INSTALL BRIDGING FOR BAR JOISTS AS PER S.J.I. REQUIREMENTS.
4. COORDINATE ALL ROOF TOP EQUIPMENT & OPENINGS WITH 'M' & 'A' DWGS, AS WELL AS WITH APPROVED SHOP DRAWINGS. LOCATIONS AND SIZES INDICATED ARE APPROXIMATE AND SHALL BE COORDINATED.
5. INDICATES BEAM TO COLUMN MOMENT CONNECTION WITH THE NUMBER REPRESENTING THE ASD MOMENT CAPACITY IN FT-KIPS
6. STEEL CONNECTION PIECE DETAILS SHALL BE SUBMITTED WITH CALCULATIONS SIGNED AND SEALED BY A NEW YORK STATE LICENSED PROFESSIONAL ENGINEER. CONNECTION DESIGNER SHALL DESIGN ALL MOMENT CONNECTIONS AND SIMPLE SHEAR CONNECTIONS NOT SHOWN ON THE DRAWINGS. WHERE DESIGN SHEAR REACTION IS NOT LISTED ON DRAWINGS, IT SHALL BE DETERMINED BY THE CONNECTION DESIGNER AS THE MAXIMUM REACTION RESULTING FROM THE INDICATED BEAM SECTION BEING FULLY LOADED WITH MAXIMUM ALLOWABLE UNIFORM LOADS AS SPECIFIED IN AISC SPECIFICATION. WHERE AXIAL FORCE IN BEAMS IS NOT LISTED ON DRAWINGS, IT SHALL BE TAKEN AS 10KIPS ASD. ALL CONNECTIONS SHALL BE DESIGNED CONSIDERING AXIAL, SHEAR AND MOMENT FORCES SIMULTANEOULSY AS REQUIRED BY BUILDING CODE. SEE STRUCTURAL STEEL SPECIFICATION FOR ADDITIONAL LOADING DESIGN REQUIREMENTS.

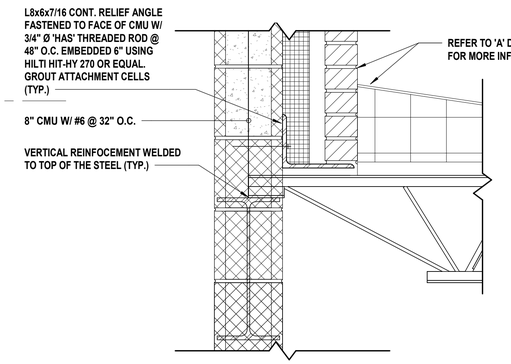

2 Relief Angle Section
SCALE: 1 1/2" = 1'-0"

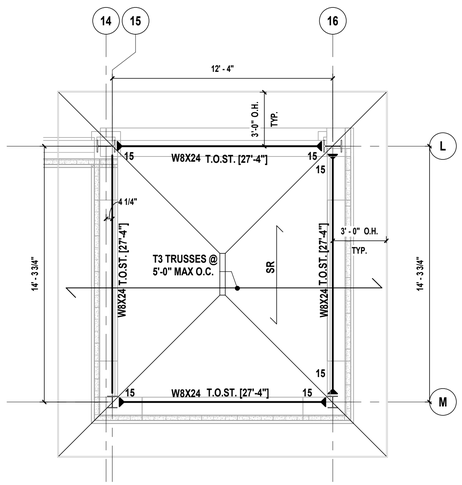

3 Partial Roof Framing Plan
SCALE: 1/4" = 1'-0"

H2M architects + engineers
538 Broad Hollow Road, 4th Floor East
Melville, NY 11747
631.756.8000 • www.h2m.com

CONSULTANTS:

MARK	DATE	DESCRIPTION

STATE OF NEW YORK · SCOTT D. LEHR · 087145 · LICENSED PROFESSIONAL ENGINEER

*ALTERATION OF THIS DOCUMENT EXCEPT BY A LICENSED PROFESSIONAL IS ILLEGAL.

DESIGNED BY:	DRAWN BY:	CHECKED BY:	REVIEWED BY:
MDH	MDH		
PROJECT No: VGFD2001	DATE: JULY 2022	SCALE: AS SHOWN	

CLIENT
VAILS GATE FIRE DISTRICT

New Storage Building (Phase I)
New Fire Station (Phase II)

872 Blooming Grove Turnpike
New Windsor, NY 12553

CONTRACT
CONTRACT G
GENERAL CONSTRUCTION

STATUS
FINAL BID DOCUMENT

SHEET TITLE
STRUCTURAL
PARTIAL LOW & HIGH ROOF FRAMING PLAN - SOUTH END

DRAWING No.
S2 123.00

C:\Users\mhornberger\Documents\VGFD2001-Central21-S_mhornberger.rvt
7/14/2022 4:45:25 PM

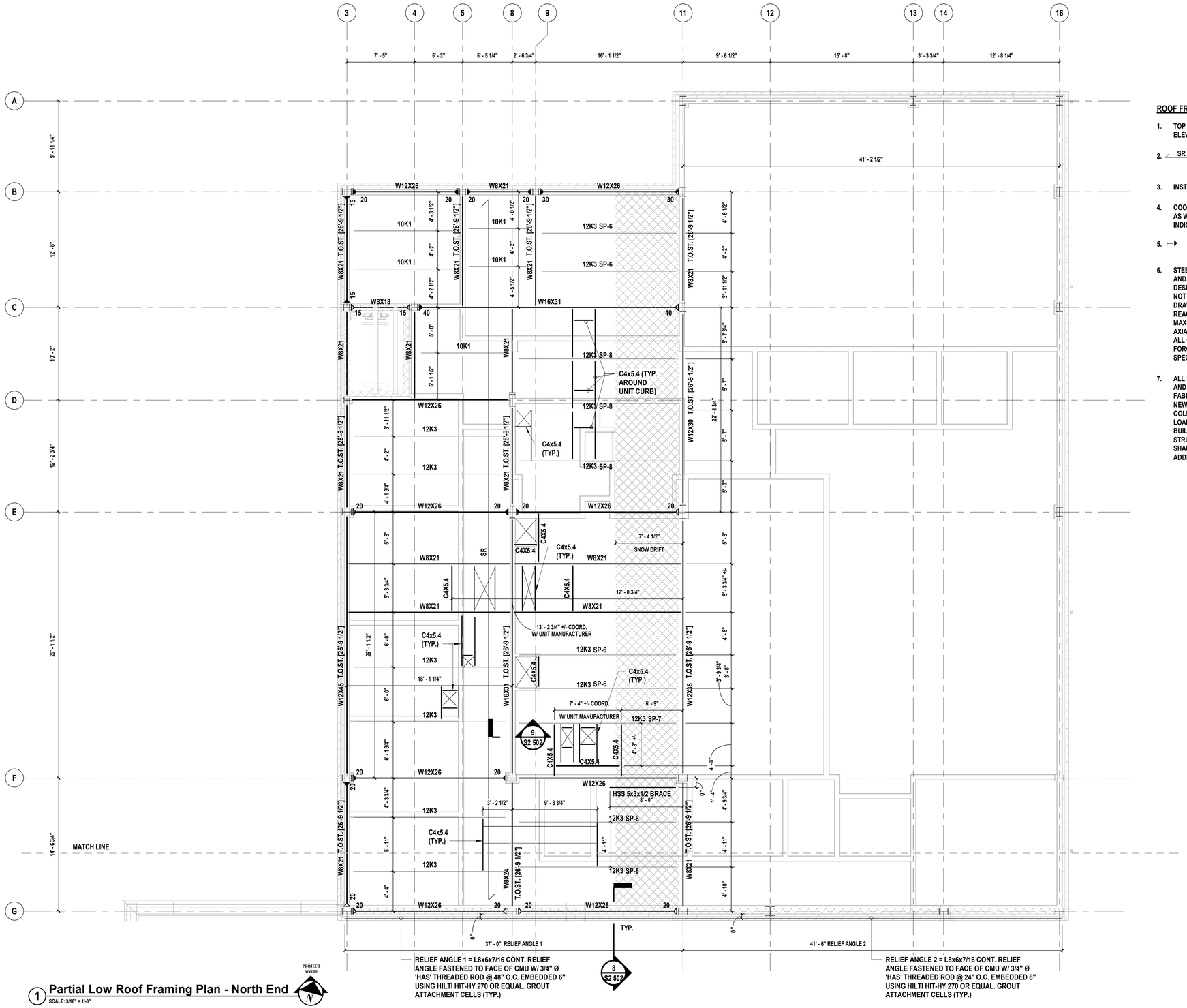

1 **Partial Low Roof Framing Plan - North End**
SCALE: 3/16" = 1'-0"

LEGEND:

T.O.ST. = TOP OF STEEL
E.O.D. = EDGE OF DECK
U.O.N. = UNLESS OTHERWISE NOTED

ROOF FRAMING NOTES:

1. TOP OF STEEL SHALL BE SET AT [27'-0"] ABOVE FINISHED FIRST FLOOR ELEVATION, UNLESS OTHERWISE NOTED AS THUS [ ].
2. SR — INDICATES SPAN OF 1.5B 20GA. METAL ROOF DECK AS MANUFACTURED BY VULCRAFT NUCOR OR APPROVED EQUAL.
3. INSTALL BRIDGING FOR BAR JOISTS AS PER S.J.I. REQUIREMENTS.
4. COORDINATE ALL ROOF TOP EQUIPMENT & OPENINGS WITH 'M' & 'A' DWGS, AS WELL AS WITH APPROVED SHOP DRAWINGS. LOCATIONS AND SIZES INDICATED ARE APPROXIMATE AND SHALL BE COORDINATED.
5. INDICATES BEAM TO COLUMN MOMENT CONNECTION WITH THE NUMBER REPRESENTING THE ASD MOMENT CAPACITY IN FT-KIPS
6. STEEL CONNECTION PIECE DETAILS SHALL BE SUBMITTED WITH CALCULATIONS SIGNED AND SEALED BY A NEW YORK STATE LICENSED PROFESSIONAL ENGINEER. CONNECTION DESIGNER SHALL DESIGN ALL MOMENT CONNECTIONS AND SIMPLE SHEAR CONNECTIONS NOT SHOWN ON THE DRAWINGS. WHERE DESIGN SHEAR REACTION IS NOT LISTED ON DRAWINGS, IT SHALL BE DETERMINED BY THE CONNECTION DESIGNER AS THE MAXIMUM REACTION RESULTING FROM THE INDICATED BEAM SECTION BEING FULLY LOADED WITH MAXIMUM ALLOWABLE UNIFORM LOADS AS SPECIFIED IN AISC SPECIFICATION. WHERE AXIAL FORCE IN BEAMS IS NOT LISTED ON DRAWINGS, IT SHALL BE TAKEN AS 10KIPS ASD. ALL CONNECTIONS SHALL BE DESIGNED CONSIDERING AXIAL, SHEAR AND MOMENT FORCES SIMULTANEOULSY AS REQUIRED BY BUILDING CODE. SEE STRUCTURAL STEEL SPECIFICATION FOR ADDITIONAL LOADING DESIGN REQUIREMENTS.
7. ALL LIGHT GAUGE EXTERIOR STUD WALLS, BOX HEADERS, CANOPY CONNECTION POINTS, AND SILLS SHALL BE DESIGNED BY THE COLD FORMED STEEL FABRICATOR. THE FABRICATOR'S ENGINEER SHALL SUBMIT A FULL SET OF CALCULATIONS AFFIXED WITH A NEW YORK STATE P.E.'S SIGN & SEAL TO THE A/E OF RECORD TO REVIEW. DESIGN OF COLD-FORMED STEEL FRAMING SHALL INCLUDE CONSIDERATION FOR ALL APPLICABLE LOADS AS SHOWN ON SHEET S2 100.00 AND SHALL BE IN CONFORMANCE WITH THE BUILDING CODE OF NEW YORK STATE. EXTERIOR CLADDING SYSTEMS AND ANCILLARY STRUCTURES INCLUDING CANOPIES SUPPORTED BY THE COLD FORMED STEEL SYSTEM SHALL BE CONSIDERED ACCORDINGLY. REFER TO SPECIFICATION 054000 FOR ADDITIONAL REQUIREMENTS.

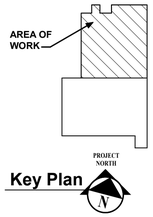

Key Plan

H2M architects + engineers
538 Broad Hollow Road, 4th Floor East
Melville, NY 11747
631.756.8000 • www.h2m.com

CONSULTANTS:

MARK	DATE	DESCRIPTION

STATE OF NEW YORK · SCOTT D. LEHN · 087145 · LICENSED PROFESSIONAL ENGINEER

*ALTERATION OF THIS DOCUMENT EXCEPT BY A LICENSED PROFESSIONAL IS ILLEGAL.

DESIGNED BY:	DRAWN BY:	CHECKED BY:	REVIEWED BY:
MDH	MDH		

PROJECT No:	DATE:	SCALE:
VGFD2001	JULY 2022	AS SHOWN

CLIENT

VAILS GATE FIRE DISTRICT

New Storage Building (Phase I)
New Fire Station (Phase II)

872 Blooming Grove Turnpike
New Windsor, NY 12553

CONTRACT

CONTRACT G
GENERAL CONSTRUCTION

STATUS

FINAL BID DOCUMENT

SHEET TITLE

STRUCTURAL PARTIAL LOW ROOF FRAMING PLAN - NORTH END

DRAWING No.

S2 124.00

C:\Users\mhornberger\Documents\VGFD2001-Central21-S_mhornberger.rvt

7/14/2022 4:45:26 PM

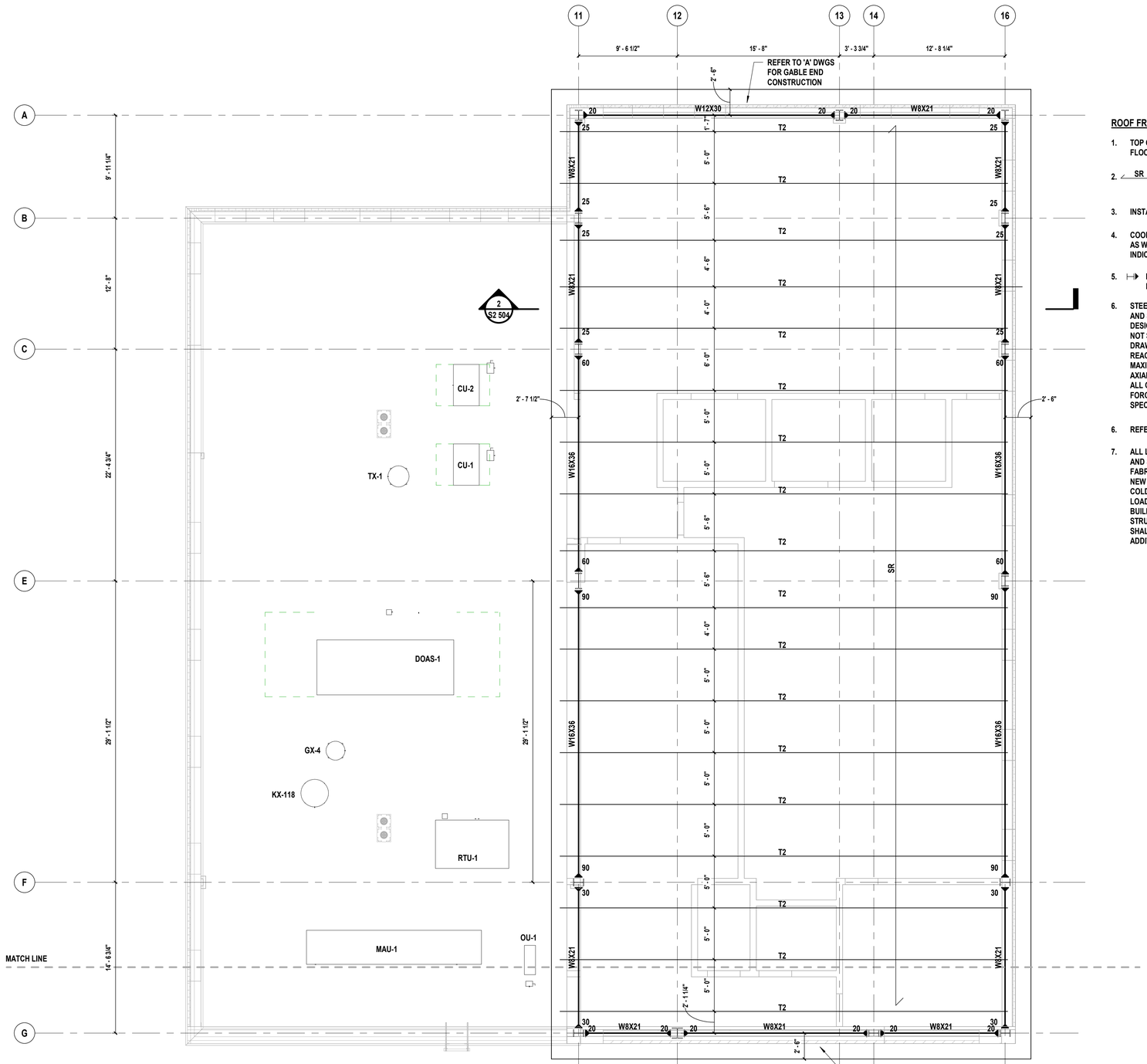

1 **Partial High Roof Framing Plan - North End**
SCALE: 3/16" = 1'-0"

ROOF FRAMING NOTES:

1. TOP OF STEEL SHALL BE SET AT [30'-0"] ABOVE FINISHED FIRST FLOOR ELEVATION, UNLESS OTHERWISE NOTED AS THUS [ ].
2. SR — INDICATES SPAN OF 1.5B 20GA. METAL ROOF DECK AS MANUFACTURED BY VULCRAFT NUCOR OR APPROVED EQUAL W/ 3/4" EXTERIOR GRADE PLYWOOD.
3. INSTALL BRIDGING FOR BAR JOISTS AS PER S.J.I. REQUIREMENTS.
4. COORDINATE ALL ROOF TOP EQUIPMENT & OPENINGS WITH 'M' & 'A' DWGS, AS WELL AS WITH APPROVED SHOP DRAWINGS. LOCATIONS AND SIZES INDICATED ARE APPROXIMATE AND SHALL BE COORDINATED.
5. INDICATES BEAM TO COLUMN MOMENT CONNECTION WITH THE NUMBER REPRESENTING THE ASD MOMENT CAPACITY IN FT-KIPS
6. STEEL CONNECTION PIECE DETAILS SHALL BE SUBMITTED WITH CALCULATIONS SIGNED AND SEALED BY A NEW YORK STATE LICENSED PROFESSIONAL ENGINEER. CONNECTION DESIGNER SHALL DESIGN ALL MOMENT CONNECTIONS AND SIMPLE SHEAR CONNECTIONS NOT SHOWN ON THE DRAWINGS. WHERE DESIGN SHEAR REACTION IS NOT LISTED ON DRAWINGS, IT SHALL BE DETERMINED BY THE CONNECTION DESIGNER AS THE MAXIMUM REACTION RESULTING FROM THE INDICATED BEAM SECTION BEING FULLY LOADED WITH MAXIMUM ALLOWABLE UNIFORM LOADS AS SPECIFIED IN AISC SPECIFICATION. WHERE AXIAL FORCE IN BEAMS IS NOT LISTED ON DRAWINGS, IT SHALL BE TAKEN AS 10KIPS ASD. ALL CONNECTIONS SHALL BE DESIGNED CONSIDERING AXIAL, SHEAR AND MOMENT FORCES SIMULTANEOULSY AS REQUIRED BY BUILDING CODE. SEE STRUCTURAL STEEL SPECIFICATION FOR ADDITIONAL LOADING DESIGN REQUIREMENTS.
6. REFER TO SHEET S2504 FOR TRUSS LOADING DIAGRAM & NOTES.
7. ALL LIGHT GAUGE EXTERIOR STUD WALLS, BOX HEADERS, CANOPY CONNECTION POINTS, AND SILLS SHALL BE DESIGNED BY THE COLD FORMED STEEL FABRICATOR. THE FABRICATOR'S ENGINEER SHALL SUBMIT A FULL SET OF CALCULATIONS AFFIXED WITH A NEW YORK STATE P.E.'S SIGN & SEAL TO THE A/E OF RECORD TO REVIEW. DESIGN OF COLD-FORMED STEEL FRAMING SHALL INCLUDE CONSIDERATION FOR ALL APPLICABLE LOADS AS SHOWN ON SHEET S2 100.00 AND SHALL BE IN CONFORMANCE WITH THE BUILDING CODE OF NEW YORK STATE. EXTERIOR CLADDING SYSTEMS AND ANCILLARY STRUCTURES INCLUDING CANOPIES SUPPORTED BY THE COLD FORMED STEEL SYSTEM SHALL BE CONSIDERED ACCORDINGLY. REFER TO SPECIFICATION 054000 FOR ADDITIONAL REQUIREMENTS.

H2M architects + engineers
538 Broad Hollow Road, 4th Floor East
Melville, NY 11747
631.756.8000 • www.h2m.com

CONSULTANTS:

MARK	DATE	DESCRIPTION

STATE OF NEW YORK · SCOTT D. LEHN · 087145 · LICENSED PROFESSIONAL ENGINEER

*ALTERATION OF THIS DOCUMENT EXCEPT BY A LICENSED PROFESSIONAL IS ILLEGAL

DESIGNED BY:	DRAWN BY:	CHECKED BY:	REVIEWED BY:
MDH	MDH		
PROJECT No: VGFD2001	DATE: JULY 2022		SCALE: AS SHOWN

CLIENT
VAILS GATE FIRE DISTRICT

New Storage Building (Phase I)
New Fire Station (Phase II)

872 Blooming Grove Turnpike
New Windsor, NY 12553

CONTRACT
CONTRACT G
GENERAL CONSTRUCTION

STATUS
FINAL BID DOCUMENT

SHEET TITLE
STRUCTURAL
PARTIAL HIGH ROOF FRAMING PLAN - NORTH END

DRAWING No.
S2 125.00

C:\Users\mhomberger\Documents\VGFD2001-Central21-S_mhomberger.rvt
7/14/2022 4:45:26 PM

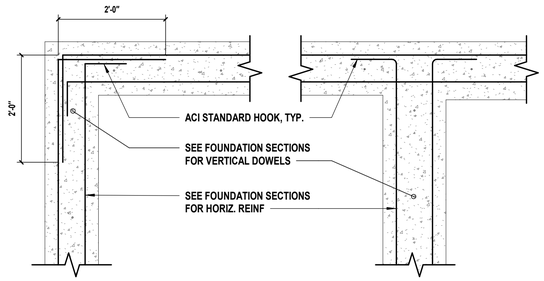

1 Typical Corner Reinforcement at Foundation Wall or Footing
SCALENTS

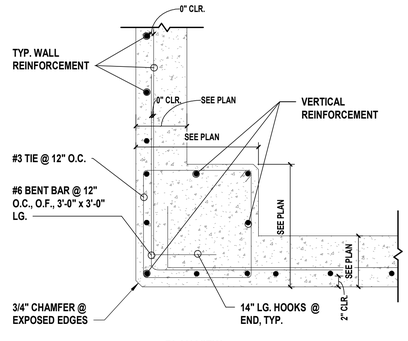

NOTE:
1. CONDITION AT SINGLE LAYER OF WALL REINFORCEMENT SHOWN. DOUBLE LAYER REINFORCEMENT CONDITION SIMILAR. 3'-0" x 3'-0" LONG BENT BARS REQUIRED AT OUTSIDE FACE ONLY.

2 Typical Corner Pier/Foundation Wall Intersection
SCALEN T S

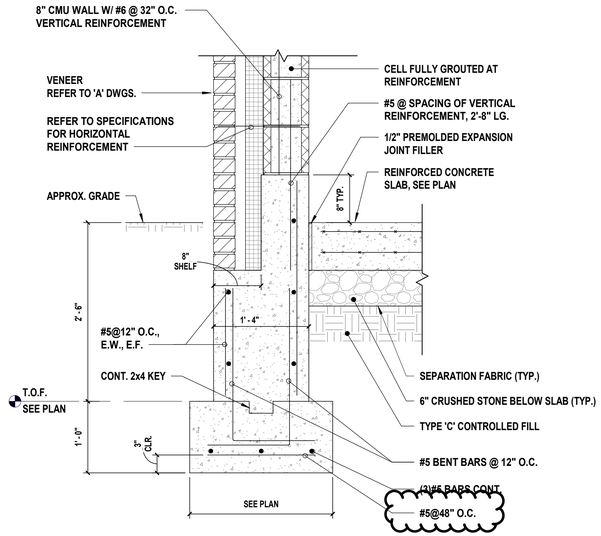

3 Typical Exterior Foundation Wall at CMU w/ Brick
SCALE: 1" = 1'-0"

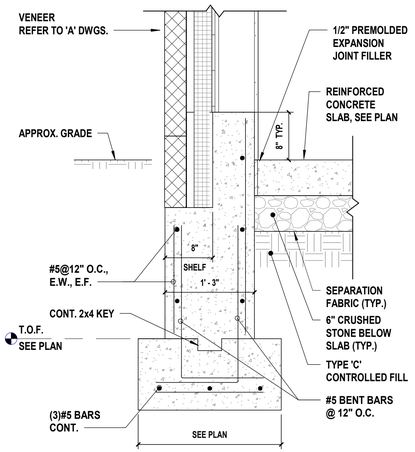

4 Typical Exterior Foundation Wall at CFS w/ Brick
SCALE: 1" = 1'-0"

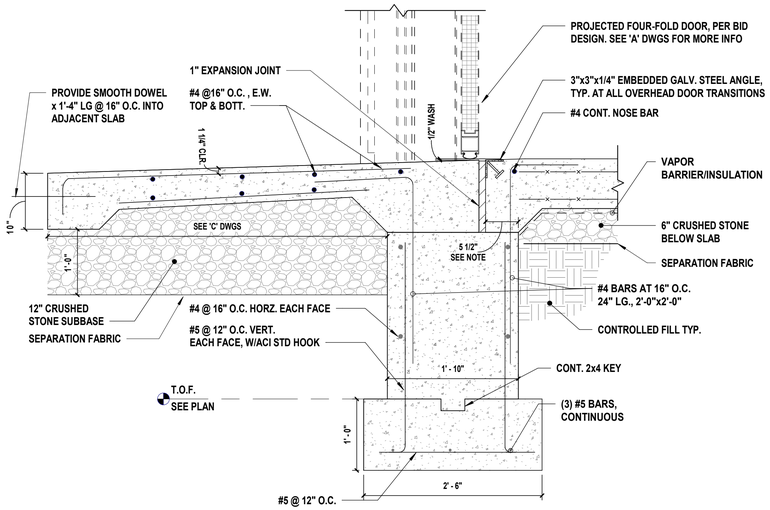

NOTE: THE LOCATIONS OF THE EDGE OF THE INTERIOR SLAB IS SUBJECT TO CHANGE BASED ON THE BID DOOR DESIGN. CONTRACTOR TO COORDINATE AND CONFIRM

5 Section at Door Apron at Overhead Doors
SCALE N.T.S.

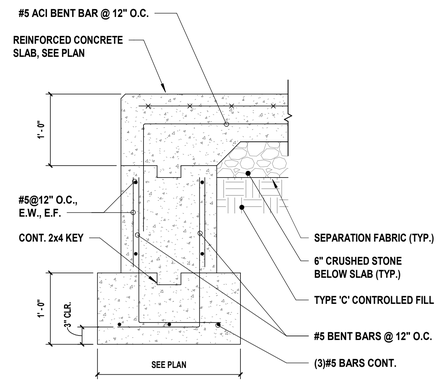

6 Typical Haunched Slab at Doorways
SCALE: 1" = 1'-0"

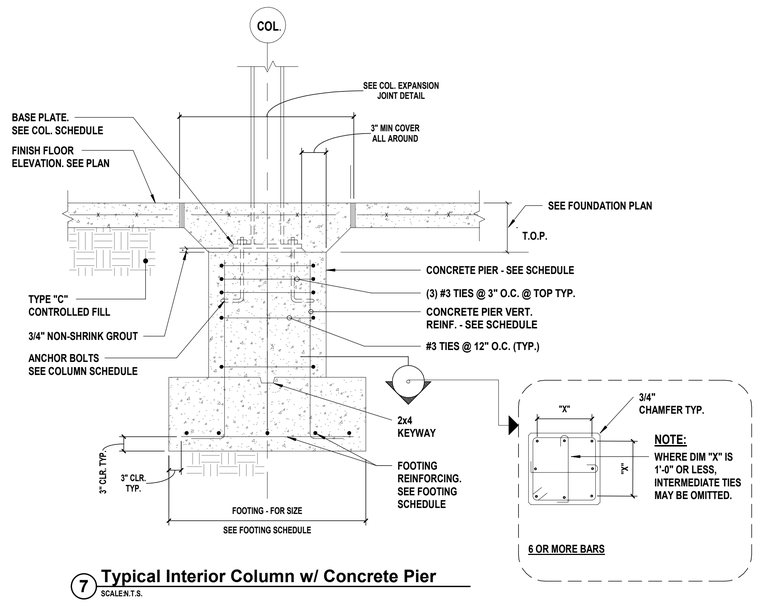

7 Typical Interior Column w/ Concrete Pier
SCALE N.T.S.

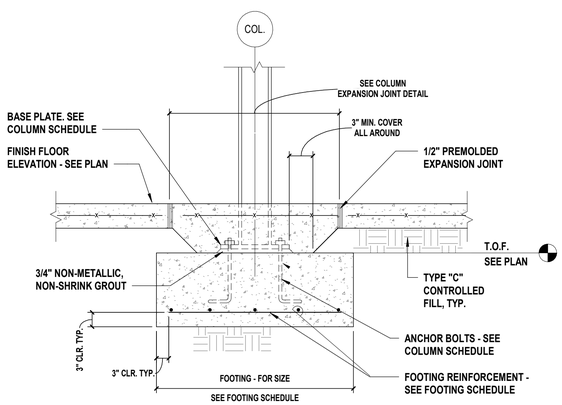

8 Typical Interior Column Footing Detail
SCALENTS

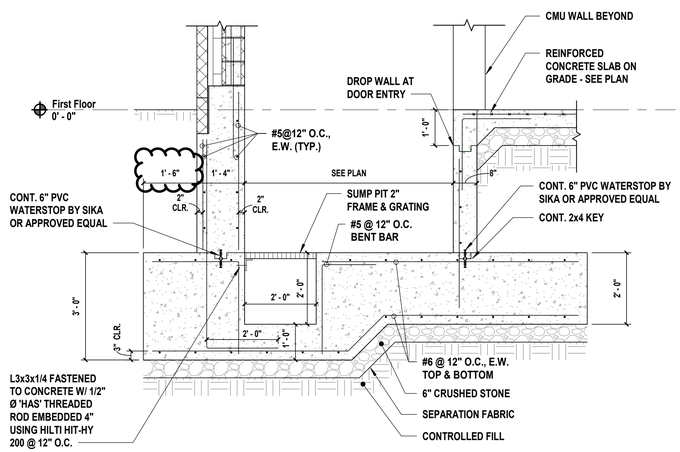

9 Section at Elevator Foundation
SCALE: 1/2" = 1'-0"

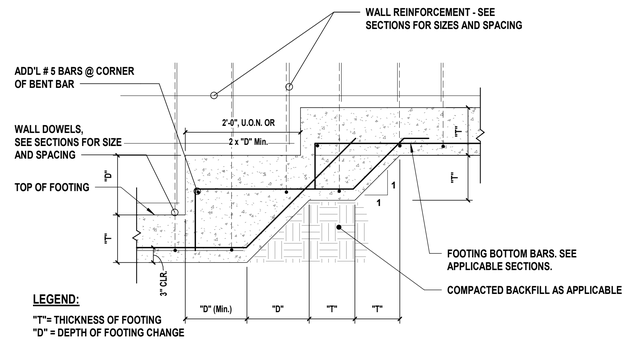

LEGEND:
"T"= THICKNESS OF FOOTING
"D" = DEPTH OF FOOTING CHANGE

10 Typical Stepped Footing Detail
SCALE N.T.S.

H 2 M architects + engineers

538 Broad Hollow Road, 4th Floor East
Melville, NY 11747
631.756.8000 • www.h2m.com

CONSULTANTS:

MARK	DATE	DESCRIPTION
2	12/22/2022	REVS. PER TOWN COMMENTS

STATE OF NEW YORK · SCOTT D. LEHN · 087145 · LICENSED PROFESSIONAL ENGINEER

*ALTERATION OF THIS DOCUMENT EXCEPT BY A LICENSED PROFESSIONAL IS ILLEGAL.

DESIGNED BY:	DRAWN BY:	CHECKED BY:	REVIEWED BY:
MDH	MDH		

PROJECT No:	DATE:	SCALE:
VGFD2001	JULY 2022	AS SHOWN

CLIENT
VAILS GATE FIRE DISTRICT

New Storage Building (Phase I)
New Fire Station (Phase II)

872 Blooming Grove Turnpike
New Windsor, NY 12553

CONTRACT
CONTRACT G
GENERAL CONSTRUCTION

STATUS
FINAL BID DOCUMENT

SHEET TITLE
STRUCTURAL DETAILS

DRAWING No.
S2 500.02

C:\Users\mhomberger\Documents\VGFD2001-Central21-S_mhombergerPDJ45.rvt

12/27/2022 10:45:15 AM

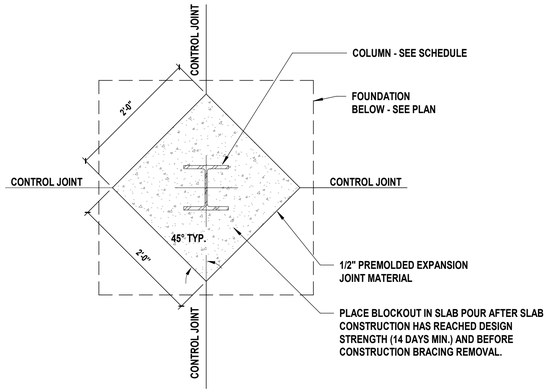

DIAMOND BLOCKOUT AROUND COLUMN

1 Typical Column Expansion Joint Detail
SCALENTS

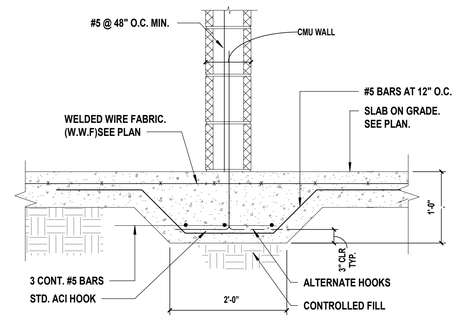

NOTE
VAPOR BARRIER TO BE CONTINUOUS UNDER THICKENED SLAB.

2 Typical Haunched Slab at Masonry Partition
SCALENTS

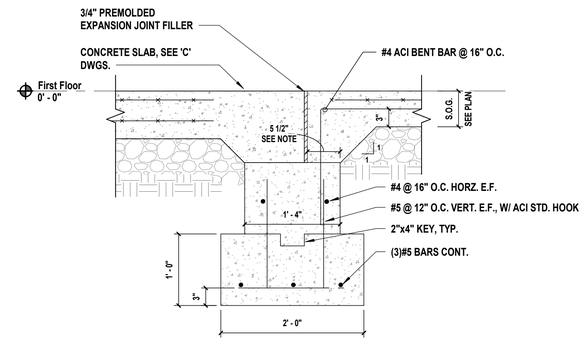

NOTE:
THE LOCATION OF EDGE OF THE INTERIOR SLAB IS SUBJECT TO CHANGE BASED ON TH EBUD DOOR DESIGN. CONTRACTOR TO COORDINATE AND CONFIRM.

3 Typical Section at Slab Transition
SCALE: 1" = 1'-0"

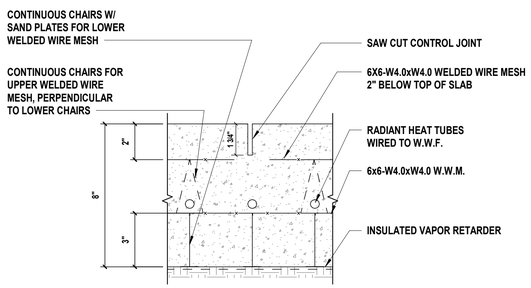

4 Slab On-grade w/ Radiant Heating - Apparatus Bay Slab
SCALE:N.T.S.

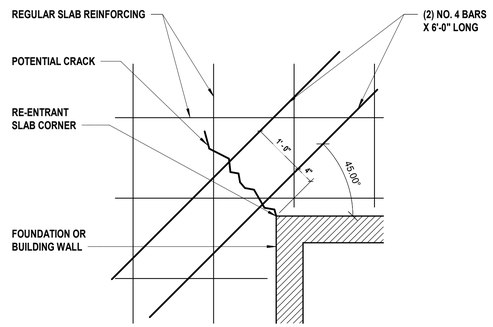

NOTE: THIS DETAIL IS APPLICABLE TO TRENCH DRAIN ENDS TOO

5 Typical Slab Re-Entrant Corner Reinforcement
SCALE:N.T.S.

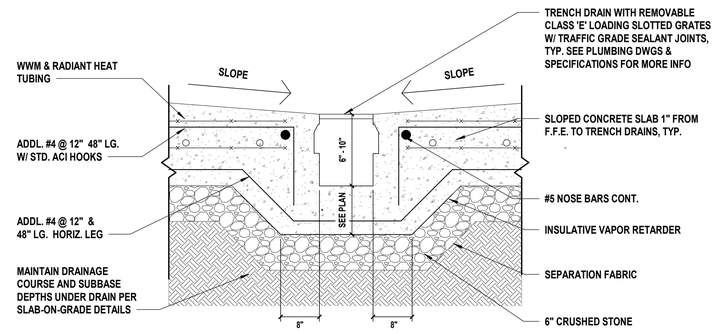

6 Trench Drain Detail
SCALE: N.T.S.

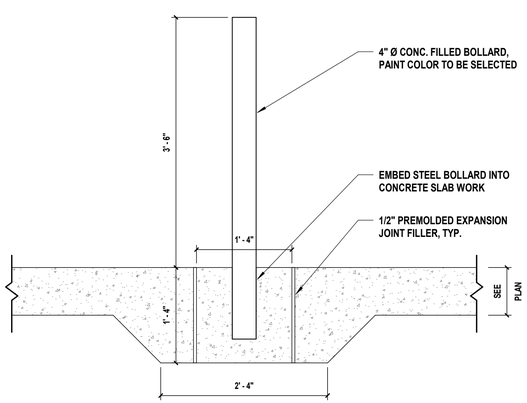

7 Interior Bollard Detail
SCALE: N.T.S.

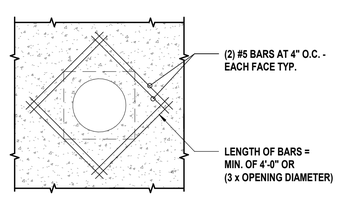

8 Typical Pipe Penetration at Wall or Slab
SCALENTS

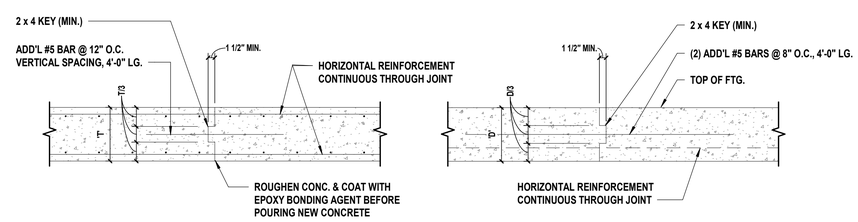

VERTICAL CONSTRUCTION JOINT IN WALL

VERTICAL CONSTRUCTION JOINT IN CONTINUOUS FOOTING

NOTES:
1) KEY WIDTH NOT TO EXCEED 1/3 WIDTH OF WALL
2) VERTICAL CONSTRUCTION JOINT PERMITTED IN WALL AT ANY POINT 4'-0" MIN. AWAY FROM FACE OF SUPPORTING PIER OR WALL OPENING
3) PROVIDE ONE VERTICAL CONSTRUCTION JOINT FOR EVERY 40'-0" OF STRAIGHT RUN OF WALL
4) SUBMIT CONSTRUCTION JOINT LAYOUT FOR ALL CONCRETE STRUCTURES FOR ENGINEER'S REVIEW

9 Typical Construction Joint Details
SCALENTS

H2M architects + engineers
538 Broad Hollow Road, 4th Floor East
Melville, NY 11747
631.756.8000 • www.h2m.com

CONSULTANTS:

MARK	DATE	DESCRIPTION

STATE OF NEW YORK · SCOTT D LEHR · 087145 · LICENSED PROFESSIONAL ENGINEER

*ALTERATION OF THIS DOCUMENT EXCEPT BY A LICENSED PROFESSIONAL IS ILLEGAL

DESIGNED BY:	DRAWN BY:	CHECKED BY:	REVIEWED BY:
MDH	MDH		
PROJECT No: VGFD2001	DATE: JULY 2022	SCALE: AS SHOWN	

CLIENT
VAILS GATE FIRE DISTRICT

New Storage Building (Phase I)
New Fire Station (Phase II)

872 Blooming Grove Turnpike
New Windsor, NY 12553

CONTRACT
CONTRACT G
GENERAL CONSTRUCTION

STATUS
FINAL BID DOCUMENT

SHEET TITLE
STRUCTURAL DETAILS

DRAWING No.
S2 501.00

C:\Users\mhomberger\Documents\VGFD2001-Central21-S_mhomberger.rvt

7/14/2022 4:45:28 PM

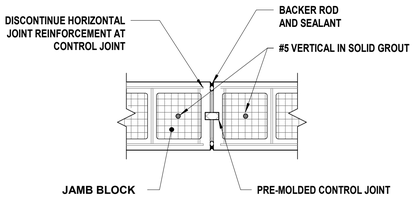

1 **Typical CMU Wall Control Joint**
SCALE:N.T.S.

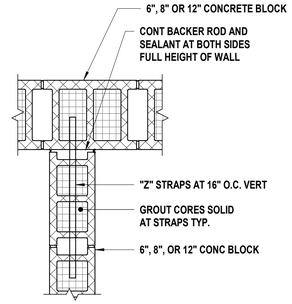

2 **Typical CMU Block Intersection**
SCALE:N.T.S.

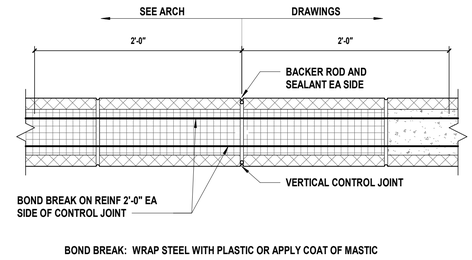

3 **Typical CMU Bond Beam at Vertical Control Joint**
SCALE:N.T.S.

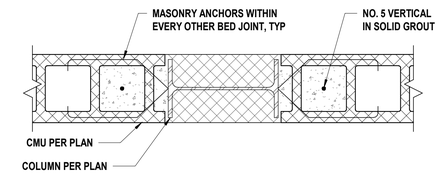

4 **Typical CMU Detail at Columns**
SCALE:N.T.S.

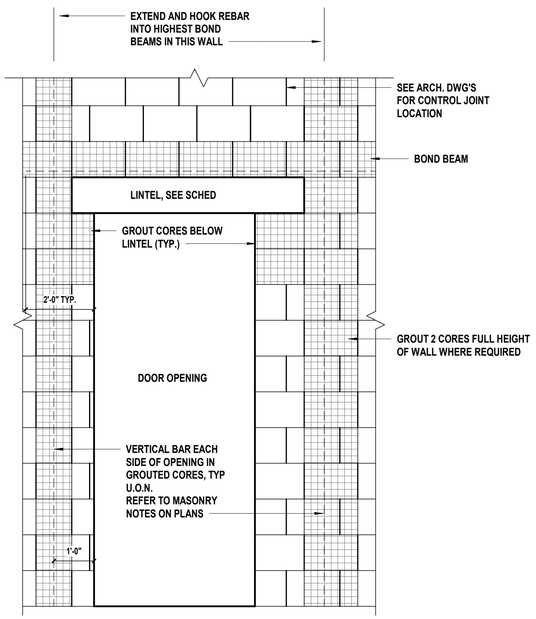

5 **Typical CMU Reinforcing at Door Openings**
SCALE:N.T.S.

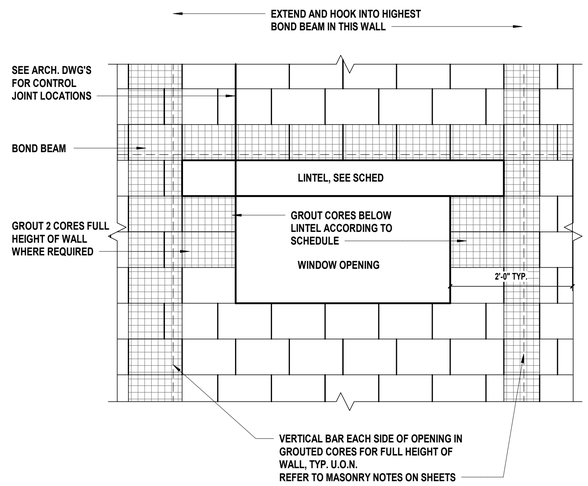

6 **Typical CMU Reinforcing at Window or Louver Opening**
SCALE:N.T.S.

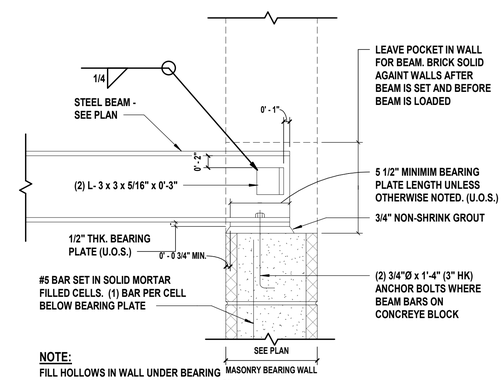

NOTE:
FILL HOLLOWS IN WALL UNDER BEARING PLATE SOLID WITH MORTAR BEFORE PLACING BEARING PLATE.

7 **Typical Beam Bearing on CMU Wall**
SCALE: 1" = 1'-0"

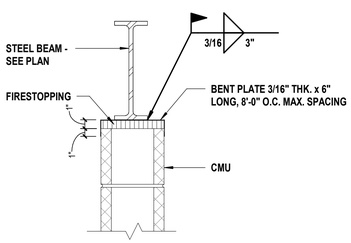

8 **Typical Beam Bracing Top of CMU Wall**
SCALE:NTS

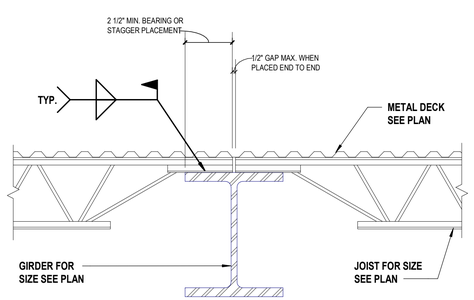

9 **Typical Joist Bearing On Steel Girder**
SCALE:NTS

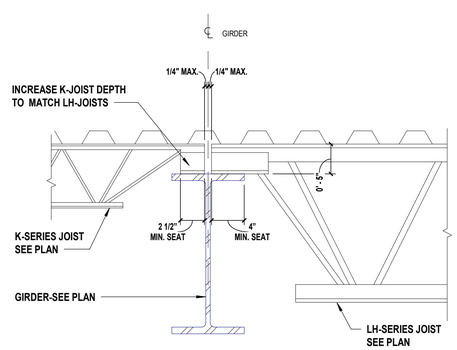

10 **Typical K-Series and LH-Series Joists Bearing On Steel Girder**
SCALE:NTS

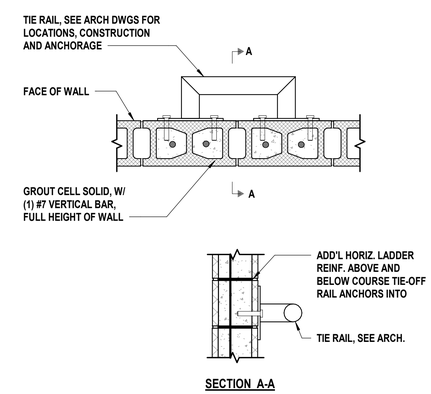

11 **Tie Off Rail at Mezzanine Wall**
SCALE: 1" = 1'-0"

H 2 M architects + engineers

538 Broad Hollow Road, 4th Floor East
Melville, NY 11747
631.756.8000 • www.h2m.com

CONSULTANTS:

MARK	DATE	DESCRIPTION

STATE OF NEW YORK · SCOTT D LEHN · 087145 · LICENSED PROFESSIONAL ENGINEER

*ALTERATION OF THIS DOCUMENT EXCEPT BY A LICENSED PROFESSIONAL IS ILLEGAL.

DESIGNED BY:	DRAWN BY:	CHECKED BY:	REVIEWED BY:
MDH	MDH		

PROJECT No:	DATE:	SCALE:
VGFD2001	JULY 2022	AS SHOWN

CLIENT

VAILS GATE FIRE DISTRICT

New Storage Building (Phase I)
New Fire Station (Phase II)

872 Blooming Grove Turnpike
New Windsor, NY 12553

CONTRACT
CONTRACT G
GENERAL CONSTRUCTION

STATUS
FINAL BID DOCUMENT

SHEET TITLE
STRUCTURAL DETAILS

DRAWING No.
S2 502.00

C:\Users\mhornberger\Documents\VGFD2001-Central21-S_mhornberger.rvt

7/14/2022 4:45:28 PM

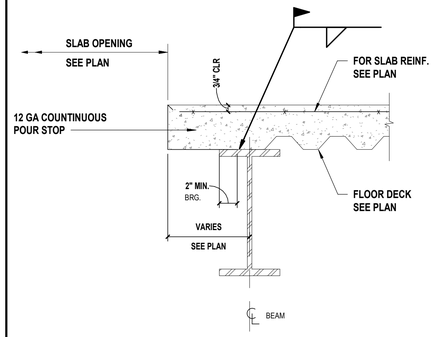

DECK SPAN PARALLEL TO BEAM

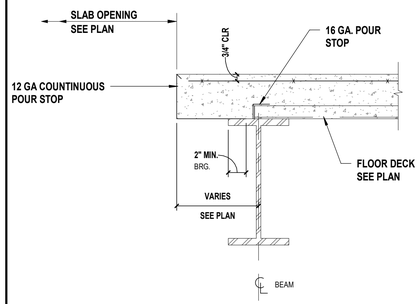

DECK SPAN PERPENDICULAR TO BEAM

1 Typical Pour Stop Details At Slab Openings
SCALE: 1 1/2" = 1'-0"

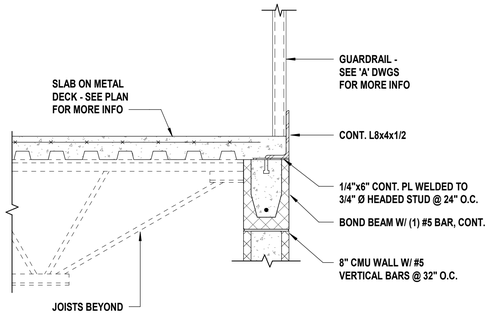

2 Typical Guardrail Attachment at Mezzanine
SCALEN T S

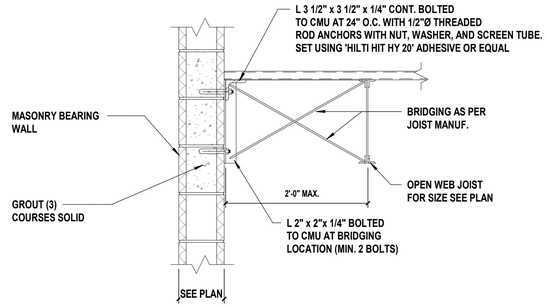

3 Typical Deck Support And Joist Bridging at CMU Wall
SCALE:N.T.S.

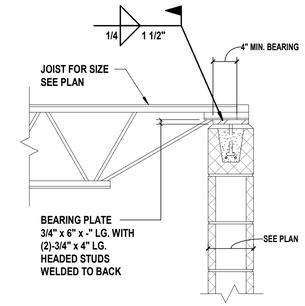

4 Typical Joist Bearing on CMU Wall
SCALENTS

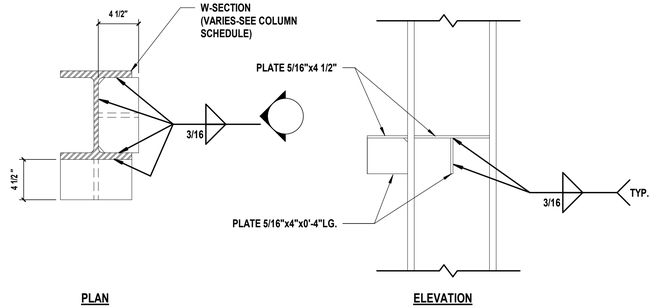

5 Typical Joist Seat At Column Web or Flange
SCALENTS

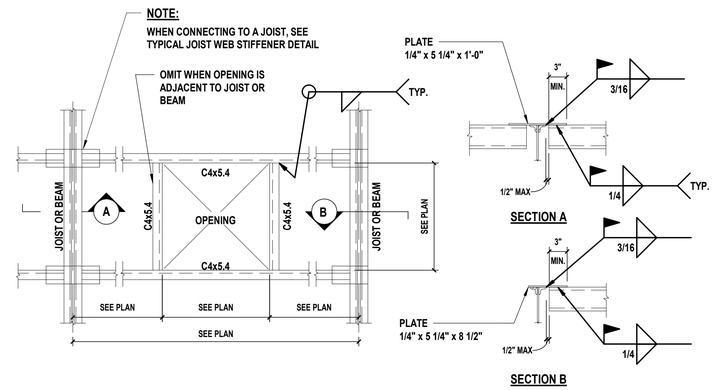

6 Typical Framed Roof Opening (Top Flange Tabs)
SCALENTS

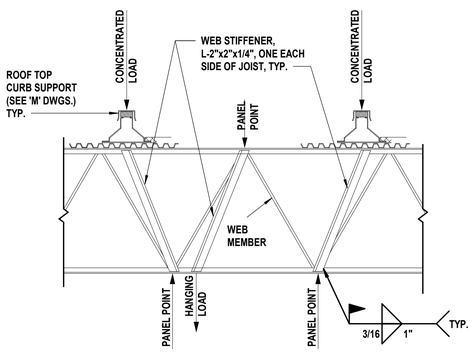

NOTE:
FIELD APPLIED WEB STIFFERNERS ARE TO BE INSTALLED AT ALL CONCENTRATED LOADS AND HUNG LOADS NOT OCCURING AT JOISTS PANEL POINTS.

7 Typical Joist Web Stiffeners
SCALE: NTS

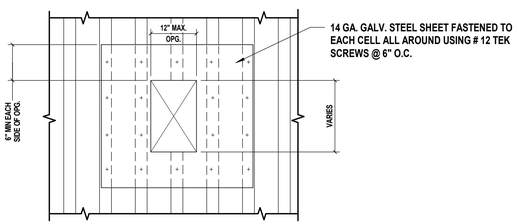

NOTE:
FOR HOLES 6"Ø OR LESS NO REINFORCEING IS REQUIRED UNLESS OTHERWISE INDICATED.

8 Typical Deck Support Openings To 12" Perpendicular To Flutes
SCALENTS

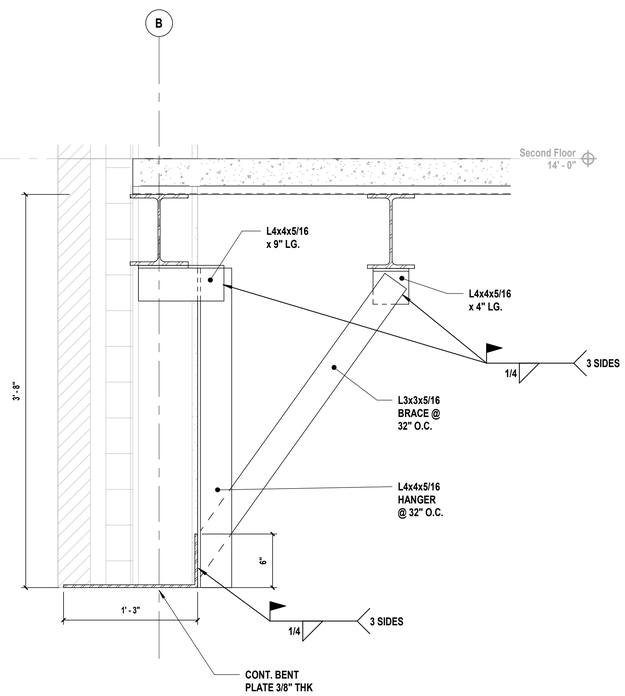

9 Section at Steel Hung System
SCALE: 1 1/2" = 1'-0"

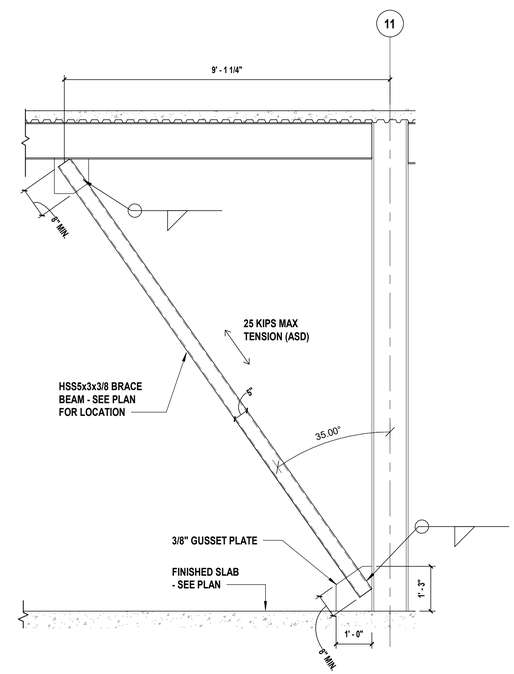

10 Typical Brace Framing Section
SCALE:N.T.S.

H 2 M architects + engineers

538 Broad Hollow Road, 4th Floor East
Melville, NY 11747
631.756.8000 • www.h2m.com

CONSULTANTS:

MARK	DATE	DESCRIPTION

STATE OF NEW YORK · SCOTT D LEHN · 087145 · LICENSED PROFESSIONAL ENGINEER

*ALTERATION OF THIS DOCUMENT EXCEPT BY A LICENSED PROFESSIONAL IS ILLEGAL.

DESIGNED BY:	DRAWN BY:	CHECKED BY:	REVIEWED BY:
MDH	MDH		

PROJECT No:	DATE:	SCALE:
VGFD2001	JULY 2022	AS SHOWN

CLIENT
VAILS GATE FIRE DISTRICT

New Storage Building (Phase I)
New Fire Station (Phase II)

872 Blooming Grove Turnpike
New Windsor, NY 12553

CONTRACT
CONTRACT G
GENERAL CONSTRUCTION

STATUS
FINAL BID DOCUMENT

SHEET TITLE
STRUCTURAL DETAILS

DRAWING No.
S2 503.00

C:\Users\mhornberger\Documents\VGFD2001-Central21-S_mhornberger.rvt

7/14/2022 4:45:29 PM

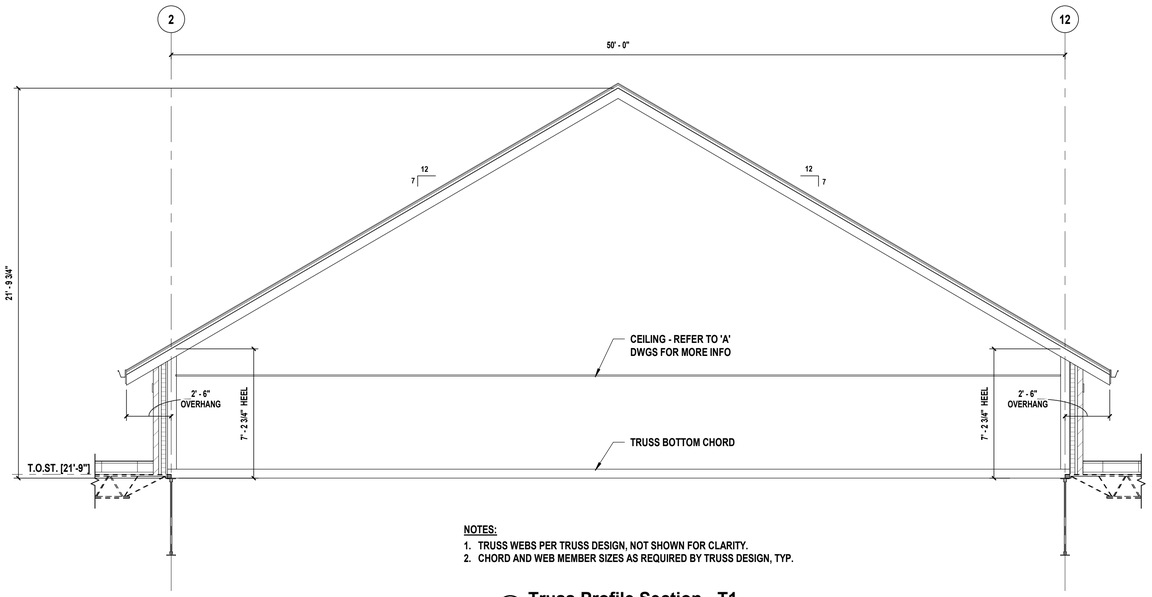

NOTES:
1. TRUSS WEBS PER TRUSS DESIGN, NOT SHOWN FOR CLARITY.
2. CHORD AND WEB MEMBER SIZES AS REQUIRED BY TRUSS DESIGN, TYP.

1 Truss Profile Section - T1
SCALE: 1/4" = 1'-0"

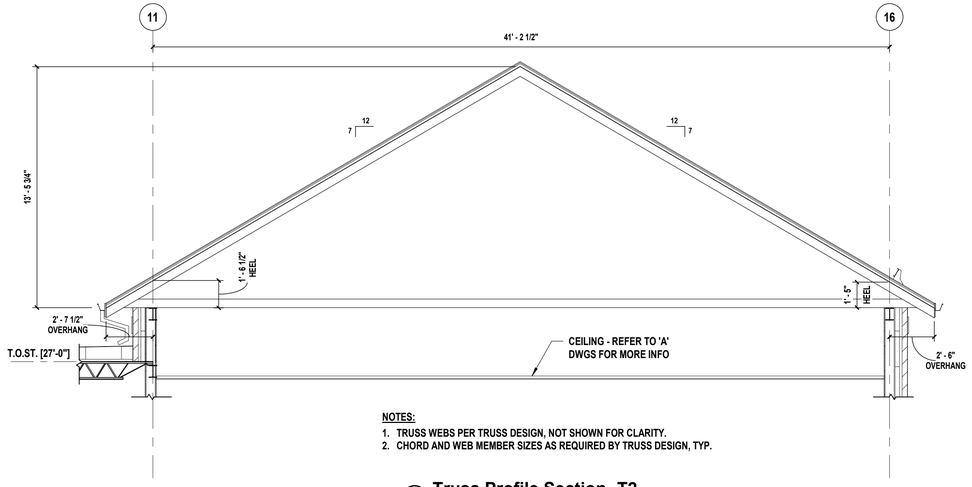

NOTES:
1. TRUSS WEBS PER TRUSS DESIGN, NOT SHOWN FOR CLARITY.
2. CHORD AND WEB MEMBER SIZES AS REQUIRED BY TRUSS DESIGN, TYP.

2 Truss Profile Section- T2
SCALE: 1/4" = 1'-0"

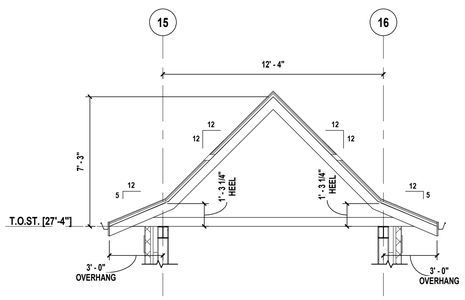

NOTES:
1. TRUSS WEBS PER TRUSS DESIGN, NOT SHOWN FOR CLARITY.
2. CHORD AND WEB MEMBER SIZES AS REQUIRED BY TRUSS DESIGN, TYP.

3 Truss Profile Section - T3
SCALE: 1/4" = 1'-0"

PRE-ENGINEERED TRUSS NOTES:

1. COLD FORMED STEEL ROOF TRUSSES SHALL BE DESIGNED AND FABRICATED BY A SHOP OR FABRICATOR SPECIALIZING IN THIS WORK, AND UNDER THE DIRECT SUPERVISION OF A PROFESSIONAL ENGINEER LICENSED IN NYS. DRAWINGS & CALCULATIONS SHALL BE SUBMITTED AFFIXED WITH A LICENSED NYS PE SIGN & SEAL.
2. TRUSSES SHALL BE DESIGNED AND MANUFACTURED IN CONFORMANCE WITH AISI & BCNYS.
3. THE TRUSS DESIGN SHALL INCLUDE TRUSS FRAMING CONFIGURATION AS SHOWN INCLUDING TRUSS ANCHORAGE, BLOCKING, CURBING, MISC. FRAMING, AND ALL TEMPORARY AND PERMANENT BRACING.
4. THE CONTRACTOR SHALL RETAIN A LICENSED PROFESSIONAL ENGINEER FOR THE DESIGN OF ALL PORTIONS AND COMPONENTS OF THE ROOF FRAMING EXCLUDED BY THE TRUSS SUPPLIER. A COMPLETE DESIGN PACKAGE SHALL BE SUBMITTED FOR REVIEW AND COMMENT BEFORE FABRICATION BEGINS.
5. TRUSSES SHALL BE MANUFACTURED, HANDLED, AND ERECTED IN A MANNER TO PRECLUDE EXCESSIVE LATERAL BENDING STRESSES.
6. TRUSSES SHALL BE ANCHORED TO TOP WALL PLATES, GIRDER TRUSSES, AND OTHER BEARING SURFACES WITH APPROVED CONNECTIONS.
7. FIELD CUTTING AND/OR MODIFICATION OF TRUSSES IS PROHIBITED.
8. ANY AND ALL DAMAGED TRUSSES SHALL BE REPLACED WITH NEW TRUSSES OR SHALL BE REPAIRED ONLY BY DETAILS PREPARED BY THE TRUSS MANUFACTURER. REPAIR DETAILS SHALL BE SEALED BY THE PROFESSIONAL ENGINEER RESPONSIBLE FOR THE ORIGINAL TRUSS DESIGN, AND SHALL BE SUBMITTED FOR REVIEW AND COMMENT BEFORE ANY REPAIRS ARE UNDERTAKEN.
9. TEMPORARY BRACING IS THE FULL RESPONSIBILITY OF THE CONTRACTOR.
10. PERMANENT TRUSS BRACING SHALL BE DESIGNED BY THE TRUSS MANUFACTURER OR ANOTHER LICENSED PROFESSIONAL ENGINEER. THE DESIGN SHALL INDICATE MEMBER SIZES, PLACEMENT, AND CONNECTIONS. THE PACKAGE SHALL COMPLETELY DETAIL ALL COMPRESSION WEB BRACING, AS WELL AS MINIMUM PERMANENT BRACING CONSISTING OF:
    A. CONTINUOUS HORIZONTAL LONGITUDINAL BRACING ALONG BOTTOM CHORDS AT 10FT O.C. MAX.
    B. W-BRACING ASSEMBLIES AT BOTTOM CHORDS LATERALLY ALONG LENGTH OF TRUSSES; W-DIAGONALS
    C. DIAGONAL GABLE END BRACING AT 10FT O.C. MAX OVER THE WIDTH OF THE BUILDING.
    D. LONGITUDINAL CROSS BRACING ASSEMBLIES ALONG TRUSS WEBS AT 10FT O.C. MAX LATERALLY, AND 20FT O.C. MAX LONGITUDINALLY.
11. REFER TO SPEC 054400 FOR MORE INFO.

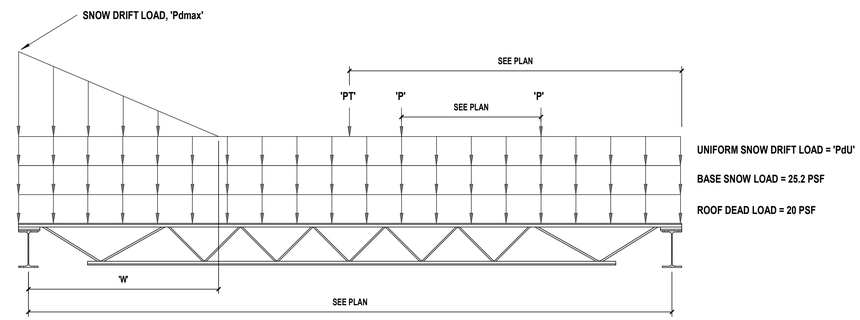

NOTES:
1. LOADS PRESENT ON ALL JOISTS, SEE ROOF FRAMING PLAN FOR LOCATIONS
2. REFER TO JOIST LOAD TABLE FOR THE SNOW DRIFT LOADING PRESENT AT EACH DESIGNATED JOIST.

SPECIAL JOIST LOADING INFO

JOIST DESIGNATION	'W'	'Pdmax'	'PdU'	'P'	'PT'
SP-1	7.75 FT	30.55 PSF	-	-	-
SP-2	7.75 FT	30.55 PSF	67.03 PSF	-	-
SP-3	-	-	67.03 PSF	-	-
SP-4	10.11 FT	45.26 PSF	-	-	-
SP-5	10.11 FT	45.26 PSF	65.85 PSF	-	-
SP-6	6.90 FT	38.32 PSF	-	-	-
SP-7	6.90 FT	38.32 PSF	-	272 LBS	-
SP-8	6.90 FT	38.32 PSF	-	200 LBS	-
SP-9	N/A	N/A	-	DL = 320 LBS LL = 640 LBS	-
SP-10	N/A	N/A	-	-	400 LBS

4 Joist Loading Diagram
SCALE: N.T.S.

H 2 M architects + engineers

538 Broad Hollow Road, 4th Floor East
Melville, NY 11747
631.756.8000 • www.h2m.com

CONSULTANTS:

MARK	DATE	DESCRIPTION

STATE OF NEW YORK · SCOTT D LEHR · 087145 · LICENSED PROFESSIONAL ENGINEER

ALTERATION OF THIS DOCUMENT EXCEPT BY A LICENSED PROFESSIONAL IS ILLEGAL

DESIGNED BY:	DRAWN BY:	CHECKED BY:	REVIEWED BY:
MDH	MDH		
PROJECT No: VGFD2001	DATE: JULY 2022	SCALE: AS SHOWN	

CLIENT
VAILS GATE FIRE DISTRICT

New Storage Building (Phase I)
New Fire Station (Phase II)

872 Blooming Grove Turnpike
New Windsor, NY 12553

CONTRACT
CONTRACT G
GENERAL CONSTRUCTION

STATUS
FINAL BID DOCUMENT

SHEET TITLE
STRUCTURAL
TRUSS DETAILS

DRAWING No.
S2 504.00

C:\Users\mhomberger\Documents\VGFD2001-Central21-S_mhomberger.rvt

7/14/2022 4:45:30 PM

COLUMN SCHEDULE

COLUMN DESIGNATION	A					B					C				D		E				F					G								H	I	J		K			L							M	
	5	9	11	13	16	3	5	9	11	16	3	4	11	16	3	8	3	8	11	16	3	8	11	13	16	1	2	3	8	11	12	14	16	7	1	14	16	1	14	16	1	2	6	10	12	14	16	15	16
			+30'-0"	+30'-0"	+30'-0"				+30'-0"	+30'-0"			+30'-0"	+30'-0"					+30'-0"	+30'-0"			+30'-0"		+30'-0"					+30'-0"	+30'-0"	+30'-0"	+30'-0"															
						+27'-0"	+27'-0"	+27'-0"			+27'-0"	+27'-0"			+27'-0"	+27'-0"	+27'-0"	+27'-0"			+27'-0"	+27'-0"		+13'-3"		+21'-9"	+21'-9"	+27'-0"	+27'-0"					+21'-9"	+21'-9"	+21'-9"		+21'-9"	+21'-9"		+21'-9"	+21'-9"	+21'-9"	+21'-9"	+21'-9"	+27'-4"	+27'-4"	+27'-4"	+27'-4"
	+9'-4"	+9'-4"																																																
	HSS5x5x318	HSS5x5x318	W12x50	W12x50	W12x50	W12x50	W8x40	W8x40	W12x50	W12x50	W8x40	W8x40	W12x50	W12x50	W8x40	W16x45	W12x50	W16X45	W18X65	W12X50	W12X50	W12X50	W12X50	W12X50	W12X50	W12X50	W12X72	W12X50	W12X50	W12X50	W12X72	W12x50	W12x50	W8x28	W12x50	W12x50	W12x50	W12x50	W12x50	W12x50	W12x50	W12x50	W12x50	W12x72	W12x50	W12x50	W8x28	W8x28
F.F. [0'-0"]																																																	
	[0'-3/4"]	[0'-3/4"]	[-0'-7 1/4"]	[-0'-7 1/4"]	[-0'-7 1/4"]	[-0'-7 1/4"]	[-0'-7 1/4"]	[-0'-7 1/4"]	[-0'-7 1/4"]	[-0'-7 1/4"]	[-0'-7 1/4"]	[-0'-7 1/4"]	[-0'-11 1/4"]	[-0'-7 1/4"]	[-0'-7 1/4"]	[-0'-11 1/4"]	[-0'-7 1/4"]	[-0'-11 1/4"]	[-0'-11 1/4"]	[-0'-7 1/4"]	[-0'-7 1/4"]	[-0'-11 1/4"]	[-0'-11 1/4"]	[-0'-11 1/4"]	[-0'-7 1/4"]	[-0'-7 1/4"]	[-0'-7 1/4"]	[-0'-7 1/4"]	[-0'-7 1/4"]	[-0'-7 1/4"]	[-0'-7 1/4"]	[-0'-7 1/4"]	[-0'-7 1/4"]	[-0'-7 1/4"]	[-0'-7 1/4"]	[-0'-7 1/4"]	[-0'-7 1/4"]	[-0'-7 1/4"]	[-0'-7 1/4"]	[-0'-11 1/4"]	[-0'-7 1/4"]	[-0'-7 1/4"]	[-0'-7 1/4"]	[-0'-7 1/4"]	[-0'-7 1/4"]	[-0'-7 1/4"]	[-0'-7 1/4"]	[-0'-7 1/4"]	[-0'-7 1/4"]
BASE PLATE	BP1	BP1	BP2	BP2	BP2	BP2	BP1	BP1	BP2	BP2	4/S600	BP1	BP3	BP3	BP1	BP5	BP2	BP5	BP6	BP3	BP2	BP2	BP4	BP2	BP2	BP2	BP7	BP2	BP2	BP2	BP7	BP2	BP2	BP1	BP2	BP2	BP2	BP2	BP2	BP2	BP2	BP7	BP2	BP2	BP7	BP2	BP2	BP1	BP1
FOOTING	F1	F1	F2	F1	F1	F1	F1	F1	F2	F2	N/A	N/A	F4	F3	N/A	F1	F1	F2	F5	F4	F1	F2	F4	F1	F2	F1	F6	F6	F2	F2	F3	F2	F2	F1	F1	F1	F1	F1	F1	F1	F1	F3	F1	F1	F3	F1	F2	F1	F1
COLUMN PIER	CP3	CP3	CP1	CP1	CP1	CP1	CP1	CP1	CP1	CP1	CP3	CP3	CP1	CP1	CP1	N/A	CP1	N/A	N/A	CP1	CP1	N/A	N/A	N/A	CP1	CP1	CP1	CP1	CP1	CP1	CP1	CP1	CP1	CP1	CP1	CP1	CP1	CP1	CP1	CP1	CP1	CP2	CP2	CP2	CP2	CP1	CP1	CP1	CP1

NOTES:

1. INDICATES TOP OF COLUMN/TOP PLATE
2. INDICATES BOTTOM OF BASE PLATE
3. SEE BASE PLATE DETAIL AND SCHEDULE TO DETERMINE BOTTOM OF COLUMN ELEVATION.
4. SEE "FOOTING SCHEDULE" FOR FOOTING SIZE AND REINFORCING.
5. ALL BASE PLATES TO BEAR ON CONCRETE SHALL BE SHIMMED USING 3/4" NON-METALLIC, NON-SHRINK GROUT.

FOOTING SCHEDULE

FOOTING TYPE	SIZE	THICKNESS	REINFORCEMENT	COMMENTS
F1	4'-0"x4'-0	12"	(5) #5 BARS BOTT, E.W.	-
F2	5'-0"x5'-0	12"	(6) #5 BARS BOTT, E.W.	-
F3	6'-0"x6'-0	12"	(7) #5 BARS BOTT, E.W.	-
F4	6'-0"x6'-0	15"	(7) #5 BARS T & B, E.W.	-
F5	7'-0"x7'-0	15"	(7) #6 BARS T & B, E.W.	-
F6	6'-0"x9'-0	15"	#6 @ 12" O.C., T & B E.W.	-

COLUMN PIER SCHEDULE

MARK	SIZE	REINFORCEMENT	TIES	ADD'L NOTES
CP1	24" x 24"	(3) #6 BARS E.F. - (8 BARS TOTAL)	#3 BARS @ 12" O.C.	
CP2	24" x 32"	(3) #6 BARS N-S (4) #6 BARS E-W (10 BARS TOTAL)	#3 BARS @ 12" O.C.	
CP3	16" x 16"	(2) #6 BARS E.F. - (4 BARS TOTAL)	#3 BARS @ 12" O.C.	

BASE PLATE SCHEDULE

MARK	WIDTH 'W'	LENGTH 'L'	THICKNESS	NOTES
BP1	10"	10"	1/2"	1&2
BP2	10"	14"	1/2"	1&2
BP3	10"	14"	5/8"	1&2
BP4	10"	18"	1"	1&2
BP5	10"	18"	1/2"	1&2
BP6	10"	22"	5/8"	1&2
BP7	14"	16"	5/8"	1&2

NOTES:

1. PROVIDE 3/4"Ø ASTM A307 ANCHOR BOLTS FOR NON-MOMENT BASE PLATE.
2. REFER TO BASE PLATE DETAIL FOR ANCHOR BOLT LOCATIONS.

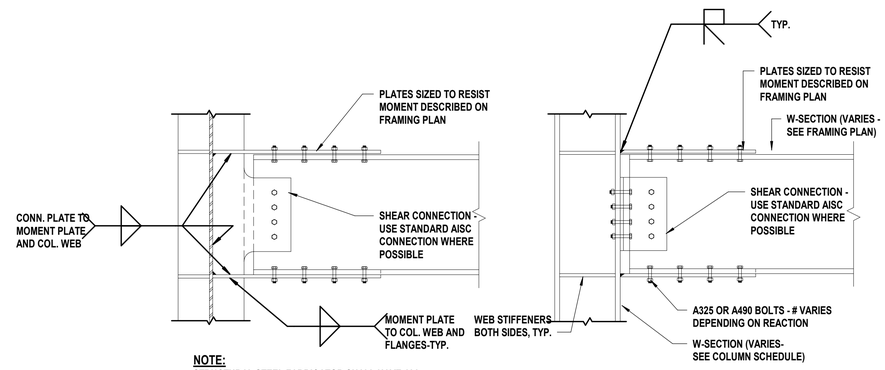

NOTE:
STRUCTURAL STEEL FABRICATOR SHALL HAVE ALL CONNECTIONS NOT DETAILED ON DRAWINGS DESIGNED BY A LICENSED STRUCTURAL ENGINEER. STEEL SHOP DRAWINGS SHALL BEAR SIGNATURE AND SEAL OF SAID ENGINEER.

1 Typical Beam to Column Moment Connection
SCALE:N.T.S.

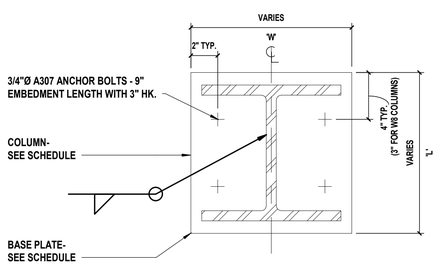

2 Typical W-Section Non-Moment Base Plate
SCALE:N.T.S.

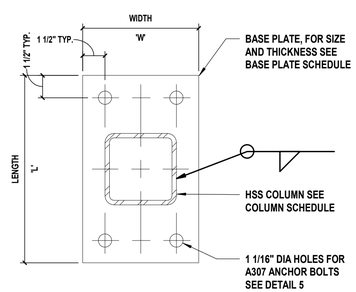

3 Typical HSS Non-Moment Base Plate
SCALE:N.T.S.

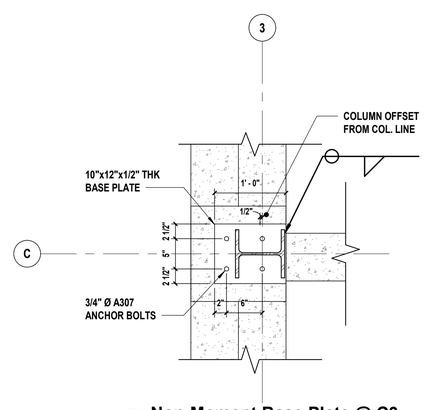

4 Non-Moment Base Plate @ C3
SCALE: 1" = 1'-0"

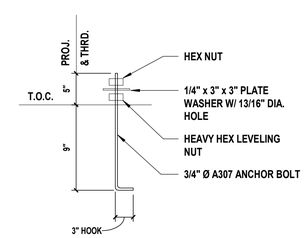

5 Typical Anchor Bolt Detail
SCALE: N.T.S.

H2M architects + engineers
538 Broad Hollow Road, 4th Floor East
Melville, NY 11747
631.756.8000 • www.h2m.com

CONSULTANTS:

MARK	DATE	DESCRIPTION

STATE OF NEW YORK · SCOTT D LEHR · 087145 · LICENSED PROFESSIONAL ENGINEER

*ALTERATION OF THIS DOCUMENT EXCEPT BY A LICENSED PROFESSIONAL IS ILLEGAL.

DESIGNED BY:	DRAWN BY:	CHECKED BY:	REVIEWED BY:
MDH	MDH		

PROJECT No:	DATE:	SCALE:
VGFD2001	JULY 2022	AS SHOWN

CLIENT
VAILS GATE FIRE DISTRICT

New Storage Building (Phase I)
New Fire Station (Phase II)

872 Blooming Grove Turnpike
New Windsor, NY 12553

CONTRACT
CONTRACT G
GENERAL CONSTRUCTION

STATUS
FINAL BID DOCUMENT

SHEET TITLE
STRUCTURAL
COLUMN SCHEDULE AND DETAILS

DRAWING No.
S2 600.00

C:\Users\mhornberger\Documents\VGFD2001-Central21-S_mhornberger.rvt
7/14/2022 4:45:31 PM

COMcheck Software Version 4.1.5.3
Envelope Compliance Certificate

Project Information

Energy Code:	2018 IECC
Project Title:	Vails Gate Firehouse
Location:	New Windsor, New York
Climate Zone:	5a
Project Type:	New Construction
Vertical Glazing / Wall Area:	16%

Construction Site:
872 Blooming Grove Turnpike
New Windsor, N 12553

Owner/Agent:

Designer/Contractor:
Robert Bee
H2M architects + engineers
538 Broadhollow Road
4th Floor East
Melville, NY 11747
6317568000

Additional Efficiency Package(s)

Credits: 1.0 Required 1.0 Proposed
Enhanced Interior Lighting Controls, 1.0 credit

Building Area	Floor Area
1-Fire Station : Nonresidential	21979

Envelope Assemblies

Assembly	Gross Area or Perimeter	Cavity R-Value	Cont. R-Value	Proposed U-Factor	Budget U-Factor(a)
Roof 1& 2: Attic Roof with Steel Joists, [Bldg. Use 1 - Fire Station]	3799	38.0	0.0	0.035	0.027
Roof 3: Attic Roof with Steel Joists, [Bldg. Use 1 - Fire Station]	461	38.0	0.0	0.035	0.027
Roof 4: Insulation Entirely Above Deck, [Bldg. Use 1 - Fire Station]	3058	---	30.0	0.032	0.032
Roof 5: Insulation Entirely Above Deck, [Bldg. Use 1 - Fire Station]	747	---	30.0	0.032	0.032
Roof 6: Insulation Entirely Above Deck, [Bldg. Use 1 - Fire Station]	2761	---	30.0	0.032	0.032
Roof 7& 8: Attic Roof with Steel Joists, [Bldg. Use 1 - Fire Station]	5026	38.0	0.0	0.035	0.027
Floor 1- Heated Slab at App Bay Side: Slab-On-Grade:Heated Fully Insulated (user specified perimeter R-value + R-10.0 under slab), [Bldg. Use 1 - Fire Station] (c)	365	---	10.0	0.550	0.620
Floor 2- Unheated Slab: Slab-On-Grade:Unheated, Horizontal with vertical 2 ft., [Bldg. Use 1 - Fire Station] (c)	387	---	10.0	0.700	0.540
NORTH					
Exterior Wall 8 Partition Type 01 App Bay Side: Concrete Block:8", Partially Grouted, Cells Empty, Normal Density, Furring: None, [Bldg. Use 1 - Fire Station]	347	---	15.0	0.058	0.090
Overhead Door OH6: Insulated Metal, Garage door 14% glazing, [Bldg. Use 1 - Fire Station]	196	---	---	0.160	0.310
Exterior Wall 11 Partition Type 03 App Bay Side: Steel-Framed, 16" o.c., [Bldg. Use 1 - Fire Station]	721	19.0	15.0	0.041	0.064
Exterior Wall 13 Partition Type 03: Steel-Framed, 16" o.c., [Bldg. Use 1 - Fire Station]	932	19.0	15.0	0.041	0.064
Window Type A DH, Fiberglass/Wood Combination/Fiberglass/Wood Combination, Fill 1: ARG/AIR(90/10) , LowE, CL, Grid: Vinyl/Fiberglass Frame:Operable, Perf. Specs.: Product ID MAR-N-272-00944-00001, SHGC 0.28, [Bldg. Use 1 - Fire Station] (b)	90	---	---	0.280	0.450

Assembly	Gross Area or Perimeter	Cavity R-Value	Cont. R-Value	Proposed U-Factor	Budget U-Factor(a)
Combination, Fill 1: ARG/AIR(90/10) , LowE, CL, Grid: Vinyl/Fiberglass Frame:Operable, Perf. Specs.: Product ID MAR-N-272-00944-00001, SHGC 0.28, [Bldg. Use 1 - Fire Station] (b)					
Door 126A AA425 TB Double Door, 1/4" SolarBan60 , 1/2" Arg90, 1/4" Clear, 0.946" OA: Glass (> 50% glazing):Metal Frame, Entrance Door, Perf. Specs.: Product ID P-KAW-39887, SHGC 0.23, PF 0.70, [Bldg. Use 1 - Fire Station] (b)	42	---	---	0.470	0.770
Exterior Wall 15 Partition Type 03: Steel-Framed, 16" o.c., [Bldg. Use 1 - Fire Station]	1187	19.0	15.0	0.041	0.064
Window Type A DH, Fiberglass/Wood Combination/Fiberglass/Wood Combination, Fill 1: ARG/AIR(90/10) , LowE, CL, Grid: Vinyl/Fiberglass Frame:Operable, Perf. Specs.: Product ID MAR-N-272-00944-00001, SHGC 0.28, [Bldg. Use 1 - Fire Station] (b)	207	---	---	0.280	0.450
EAST					
Exterior Wall 5 Partition Type 03 App Bay Side: Steel-Framed, 16" o.c., [Bldg. Use 1 - Fire Station]	336	19.0	15.0	0.041	0.064
Window Type B1, DH, Fiberglass/Wood Combination/Fiberglass/Wood Combination, Fill 1: ARG/AIR(90/10) , LowE, CL, Grid: Vinyl/Fiberglass Frame:Operable, Perf. Specs.: Product ID MAR-N-272-00944-00001, SHGC 0.28, [Bldg. Use 1 - Fire Station] (b)	45	---	---	0.280	0.450
Window Type B1, DH, Fiberglass/Wood Combination/Fiberglass/Wood Combination, Fill 1: ARG/AIR(90/10) , LowE, CL, Grid: Vinyl/Fiberglass Frame:Operable, Perf. Specs.: Product ID MAR-N-272-00944-00001, SHGC 0.28, [Bldg. Use 1 - Fire Station] (b)	45	---	---	0.280	0.450
Exterior Wall 6 Partition Type 02a App Bay Side: Concrete Block:8", Partially Grouted, Cells Empty, Normal Density, Furring: Metal, [Bldg. Use 1 - Fire Station]	183	8.0	15.0	0.049	0.090
Exterior Wall 10 Partition Type 03 App Bay Side: Steel-Framed, 16" o.c., [Bldg. Use 1 - Fire Station]	345	19.0	15.0	0.041	0.064
Window Type D, Fixed, Fiberglass/Wood Combination/Fiberglass/Wood Combination, Fill 1: ARG/AIR(90/10) , LowE, CL, Grid: Vinyl/Fiberglass Frame:Fixed, Perf. Specs.: Product ID MAR-N-252-01136-00001, SHGC 0.31, PF 0.50, [Bldg. Use 1 - Fire Station] (b)	45	---	---	0.260	0.380
Exterior Wall 16 Partition Type 03: Steel-Framed, 16" o.c., [Bldg. Use 1 - Fire Station]	2625	19.0	15.0	0.041	0.064
Window Type A DH, Fiberglass/Wood Combination/Fiberglass/Wood Combination, Fill 1: ARG/AIR(90/10) , LowE, CL, Grid: Vinyl/Fiberglass Frame:Operable, Perf. Specs.: Product ID MAR-N-272-00944-00001, SHGC 0.28, [Bldg. Use 1 - Fire Station] (b)	224	---	---	0.280	0.450
Door 116B: Insulated Metal, Swinging, [Bldg. Use 1 - Fire Station]	25	---	---	0.370	0.370
Door 113B: Insulated Metal, Swinging, [Bldg. Use 1 - Fire Station]	25	---	---	0.370	0.370
SOUTH					
Exterior Wall 2 Partition Type 01 App Bay Side: Concrete Block:8", Partially Grouted, Cells Empty, Normal Density, Furring: None, [Bldg. Use 1 - Fire Station]	1175	---	15.0	0.058	0.090
Overhead Door OH 1: Glass (> 50% glazing):Metal Frame, Non-Entrance Door, Perf. Specs.: Product ID NA, SHGC 0.38, [Bldg. Use 1 - Fire Station] (b)	196	---	---	0.770	0.450
Overhead Door OH 2: Glass (> 50% glazing):Metal Frame, Non-Entrance Door, Perf. Specs.: Product ID NA, SHGC 0.38, [Bldg. Use 1 - Fire Station] (b)	196	---	---	0.770	0.450
Overhead Door OH 3: Glass (> 50% glazing):Metal Frame, Non-Entrance Door, Perf. Specs.: Product ID NA, SHGC 0.38, [Bldg. Use 1 - Fire Station] (b)	196	---	---	0.770	0.450
Overhead Door OH 4: Glass (> 50% glazing):Metal Frame, Non-Entrance Door, Perf. Specs.: Product ID NA, SHGC 0.38, [Bldg. Use 1 - Fire Station] (b)	196	---	---	0.770	0.450
Overhead Door OH 5: Glass (> 50% glazing):Metal Frame, Non-Entrance Door, Perf. Specs.: Product ID NA, SHGC 0.38, [Bldg. Use 1 -	196	---	---	0.770	0.450

Assembly	Gross Area or Perimeter	Cavity R-Value	Cont. R-Value	Proposed U-Factor	Budget U-Factor(a)
Fire Station] (b)					
Exterior Wall 2 Partition Type 03 App Bay Side: Steel-Framed, 16" o.c., [Bldg. Use 1 - Fire Station]	645	19.0	15.0	0.041	0.064
Exterior Wall 4 Partition Type 03 App Bay Side: Steel-Framed, 16" o.c., [Bldg. Use 1 - Fire Station]	311	19.0	15.0	0.041	0.064
Window Type B1, DH, Fiberglass/Wood Combination/Fiberglass/Wood Combination, Fill 1: ARG/AIR(90/10) , LowE, CL, Grid: Vinyl/Fiberglass Frame:Operable, Perf. Specs.: Product ID MAR-N-272-00944-00001, SHGC 0.28, [Bldg. Use 1 - Fire Station] (b)	45	---	---	0.280	0.450
Window Type B1, DH, Fiberglass/Wood Combination/Fiberglass/Wood Combination, Fill 1: ARG/AIR(90/10) , LowE, CL, Grid: Vinyl/Fiberglass Frame:Operable, Perf. Specs.: Product ID MAR-N-272-00944-00001, SHGC 0.28, [Bldg. Use 1 - Fire Station] (b)	45	---	---	0.280	0.450
Exterior Wall 7 Partition Type 01 App Bay Side: Concrete Block:8", Partially Grouted, Cells Empty, Normal Density, Furring: None, [Bldg. Use 1 - Fire Station]	1662	---	15.0	0.058	0.090
Window Type C- Fixed, Fiberglass/Wood Combination/Fiberglass/Wood Combination, Fill 1: ARG/AIR(90/10) , LowE, CL, Grid: Vinyl/Fiberglass Frame:Fixed, Perf. Specs.: Product ID MAR-N-252-01136-00001, SHGC 0.31, [Bldg. Use 1 - Fire Station] (b)	50	---	---	0.260	0.380
Door 101B: Insulated Metal, Swinging, [Bldg. Use 1 - Fire Station]	25	---	---	0.370	0.370
Door 103B: Insulated Metal, Swinging, [Bldg. Use 1 - Fire Station]	37	---	---	0.370	0.370
Door 105B: Insulated Metal, Swinging, [Bldg. Use 1 - Fire Station]	25	---	---	0.370	0.370
Door 107C: Insulated Metal, Swinging, [Bldg. Use 1 - Fire Station]	25	---	---	0.370	0.370
Exterior Wall 17 Partition Type 03: Concrete Block:8", Partially Grouted, Cells Empty, Normal Density, Furring: Metal, [Bldg. Use 1 - Fire Station]	444	0.0	15.0	0.055	0.090
WEST					
Exterior Wall 1 Partition Type 01 App Bay Side: Concrete Block:8", Partially Grouted, Cells Empty, Normal Density, Furring: None, [Bldg. Use 1 - Fire Station]	1591	---	15.0	0.058	0.090
Window Type C- Fixed, Fiberglass/Wood Combination/Fiberglass/Wood Combination, Fill 1: ARG/AIR(90/10) , LowE, CL, Grid: Vinyl/Fiberglass Frame:Fixed, Perf. Specs.: Product ID MAR-N-252-01136-00001, SHGC 0.31, [Bldg. Use 1 - Fire Station] (b)	63	---	---	0.260	0.380
Door 101A: Insulated Metal, Swinging, [Bldg. Use 1 - Fire Station]	25	---	---	0.370	0.370
Exterior Wall 3 Partition Type 03 App Bay Side: Steel-Framed, 16" o.c., [Bldg. Use 1 - Fire Station]	307	19.0	15.0	0.041	0.064
Window Type B1, DH, Fiberglass/Wood Combination/Fiberglass/Wood Combination, Fill 1: ARG/AIR(90/10) , LowE, CL, Grid: Vinyl/Fiberglass Frame:Operable, Perf. Specs.: Product ID MAR-N-272-00944-00001, SHGC 0.28, [Bldg. Use 1 - Fire Station] (b)	45	---	---	0.290	0.450
Window Type B1, DH, Fiberglass/Wood Combination/Fiberglass/Wood Combination, Fill 1: ARG/AIR(90/10) , LowE, CL, Grid: Vinyl/Fiberglass Frame:Operable, Perf. Specs.: Product ID MAR-N-272-00944-00001, SHGC 0.28, [Bldg. Use 1 - Fire Station] (b)	45	---	---	0.280	0.450
Exterior Wall 9 Partition Type 03 App Bay Side: Steel-Framed, 16" o.c., [Bldg. Use 1 - Fire Station]	354	19.0	15.0	0.041	0.064
Window Type D, Fixed, Fiberglass/Wood Combination/Fiberglass/Wood Combination, Fill 1: ARG/AIR(90/10) , LowE, CL, Grid: Vinyl/Fiberglass Frame:Fixed, Perf. Specs.: Product ID MAR-N-252-01136-00001, SHGC 0.31, PF 0.50, [Bldg. Use 1 - Fire Station] (b)	45	---	---	0.260	0.380
Exterior Wall 12 Partition Type 03: Steel-Framed, 16" o.c., [Bldg. Use 1 - Fire Station]	2214	19.0	15.0	0.041	0.064
Window Type A DH, Fiberglass/Wood Combination/Fiberglass/Wood Combination, Fill 1: ARG/AIR(90/10) , LowE, CL, Grid: Vinyl/Fiberglass Frame:Operable, Perf. Specs.: Product ID MAR-N-272-00944-00001, SHGC 0.28, [Bldg. Use 1 - Fire Station] (b)	105	---	---	0.280	0.450
Door 112A: Insulated Metal, Swinging, [Bldg. Use 1 - Fire Station]	25	---	---	0.370	0.370

Assembly	Gross Area or Perimeter	Cavity R-Value	Cont. R-Value	Proposed U-Factor	Budget U-Factor(a)
Exterior Wall 14 Partition Type 03: Steel-Framed, 16" o.c., [Bldg. Use 1 - Fire Station]	306	19.0	15.0	0.041	0.064

(a). Budget U-factors are used for software baseline calculations ONLY, and are not code requirements.
(b) Fenestration product performance must be certified in accordance with NFRC and requires supporting documentation.
(c) Slab-On-Grade proposed and budget U-factors shown in table are F-factors.

Envelope PASSES: Design 4% better than code

Envelope Compliance Statement

Compliance Statement: The proposed envelope design represented in this document is consistent with the building plans, specifications, and other calculations submitted with this permit application. The proposed envelope systems have been designed to meet the 2018 IECC requirements in COM*check* Version 4.1.5.3 and to comply with any applicable mandatory requirements listed in the Inspection Checklist.

Name - Title Signature Date

COMcheck Software Version 4.1.5.3
Interior Lighting Compliance Certificate

Project Information

Energy Code:	2018 IECC
Project Title:	Vails Gate Firehouse
Project Type:	New Construction

Construction Site:
872 Blooming Grove Turnpike
New Windsor, NY 12553

Owner/Agent:

Designer/Contractor:
Robert Bee
H2M architects + engineers
538 Broadhollow Road
4th Floor East
Melville, NY 11747
6317568000

Additional Efficiency Package(s)

Credits: 1.0 Required 1.0 Proposed
Enhanced Interior Lighting Controls, 1.0 credit

Allowed Interior Lighting Power

A Area Category	B Floor Area (ft2)	C Allowed Watts / ft2	D Allowed Watts (B X C)
1-Fire Station	21979	0.53	11649
		Total Allowed Watts =	11649

Proposed Interior Lighting Power

A Fixture ID : Description / Lamp / Wattage Per Lamp / Ballast	B Lamps/ Fixture	C # of Fixtures	D Fixture Watt.	E (C X D)
1-Fire Station				
LED 1: F1: Recessed: Other:	1	62	32	1984
LED 2: F1E: Recessed: Other:	1	70	32	2240
LED 3: F2: Pendant: Other:	1	3	51	153
LED 4: F2E: Pendant: Other:	1	7	51	357
LED 5: F3: Recessed: Other:	1	4	27	108
LED 6: F3E: Recessed: Other:	1	4	27	108
LED 7: F4: Recessed: Other:	1	5	12	60
LED 8: F4E: Recessed: Other:	1	6	12	72
LED 9: F5: Recessed: Other:	1	8	28	224
LED 10: F5E: Recessed: Other:	1	12	28	336
LED 11: F6: Pendant: Other:	1	5	10	50
LED 12: F6E: Pendant: Other:	1	2	10	20
LED 13: F7: Recessed: Other:	1	2	8	16
LED 14: F7E: Recessed: Other:	1	4	8	32
LED 15: F8: Surface: Other:	1	1	10	10
LED 16: F8E: Surface: Other:	1	1	10	10
LED 17: F10: Surface: Other:	1	4	48	192
LED 18: F10E: Surface: Other:	1	2	48	96
LED 19: F11: Surface: Other:	1	3	27	81

A Fixture ID : Description / Lamp / Wattage Per Lamp / Ballast	B Lamps/ Fixture	C # of Fixtures	D Fixture Watt.	E (C X D)
LED 20: F12: Surface: Other:	1	2	11	22
LED 21: F13: Recessed: Other:	1	3	205	615
LED 22: F14: Pendant: Other:	1	14	113	1582
LED 23: F14E: Pendant: Other:	1	14	113	1582
			Total Proposed Watts =	9950

Interior Lighting PASSES: Design 15% better than code

Interior Lighting Compliance Statement

Compliance Statement: The proposed interior lighting design represented in this document is consistent with the building plans, specifications, and other calculations submitted with this permit application. The proposed interior lighting systems have been designed to meet the 2018 IECC requirements in COM*check* Version 4.1.5.3 and to comply with any applicable mandatory requirements listed in the Inspection Checklist.

Name - Title Signature Date

H2M architects + engineers
538 Broad Hollow Road, 4th Floor East
Melville, NY 11747
631.756.8000 • www.h2m.com

CONSULTANTS:

MARK	DATE	DESCRIPTION

REGISTERED ARCHITECT ROBERT BEE 032389 STATE OF NEW YORK

*ALTERATION OF THIS DOCUMENT EXCEPT BY A LICENSED PROFESSIONAL IS ILLEGAL.

DESIGNED BY:	DRAWN BY:	CHECKED BY:	REVIEWED BY:
KEM	JHG		

PROJECT No:	DATE:	SCALE:
VGFD2001	JULY 2022	AS SHOWN

CLIENT
VAILS GATE FIRE DISTRICT

New Storage Building (Phase I)
New Fire Station (Phase II)

872 Blooming Grove Turnpike
New Windsor, NY 12553

CONTRACT
CONTRACT G
GENERAL CONSTRUCTION

STATUS
FINAL BID DOCUMENT

SHEET TITLE
ARCHITECTURE
ENERGY COMPLIANCE
NEW FIRE STATION
PHASE 2

DRAWING No.
A2 010.00

C:\Users\jgazman\Documents\VGFD2001_Central21_A_jgazman.rvt
7/18/2022 8:17:12 AM

COM*check* Software Version 4.1.5.3

Exterior Lighting Compliance Certificate

Project Information

Energy Code:	2018 IECC
Project Title:	Vails Gate Firehouse
Project Type:	New Construction
Exterior Lighting Zone	3 (Other (LZ3))

Construction Site:
872 Blooming Grove Turnpike
New Windsor, NY 12553

Owner/Agent:

Designer/Contractor:
Robert Bee
H2M architects + engineers
538 Broadhollow Road
4th Floor East
Melville, NY 11747
6317568000

Allowed Exterior Lighting Power

A Area/Surface Category	B Quantity	C Allowed Watts / Unit	D Tradable Wattage	E Allowed Watts (B X C)
Fire House Site (Parking area)	51394 ft2	0.06	Yes	3084
			Total Tradable Watts (a) =	3084
			Total Allowed Watts =	3084
			Total Allowed Supplemental Watts (b) =	500

(a) Wattage tradeoffs are only allowed between tradable areas/surfaces.
(b) A supplemental allowance equal to 500 watts may be applied toward compliance of both non-tradable and tradable areas/surfaces.

Proposed Exterior Lighting Power

A Fixture ID : Description / Lamp / Wattage Per Lamp / Ballast	B Lamps/ Fixture	C # of Fixtures	D Fixture Watt.	E (C X D)
Fire House Site (Parking area 51394 ft2): Tradable Wattage				
LED 1: EF1: Pole Mount: Other:	1	2	27	54
LED 2: EF2: Wall Mount: Other:	1	1	18	18
LED 3: EF3: Wall Mount: Other:	1	3	30	90
LED 4: EF5: Wall Mount: Other:	1	4	11	44
LED 5: EF6: Wall Mount: Other:	1	4	27	108
LED 6: EF7: Wall Mount: Other:	1	7	40	280
LED 7: EF8: Surface Mount: Other:	1	8	20	160
			Total Tradable Proposed Watts =	754

Exterior Lighting PASSES: Design 79% better than code

Exterior Lighting Compliance Statement

Compliance Statement: The proposed exterior lighting design represented in this document is consistent with the building plans, specifications, and other calculations submitted with this permit application. The proposed exterior lighting systems have been designed to meet the 2018 IECC requirements in COM*check* Version 4.1.5.3 and to comply with any applicable mandatory requirements listed in the Inspection Checklist.

Name - Title | Signature | Date

COM*check* Software Version 4.1.5.3

Mechanical Compliance Certificate

Project Information

Energy Code:	2018 IECC
Project Title:	Vails Gate Firehouse
Location:	New Windsor, New York
Climate Zone:	5a
Project Type:	New Construction

Construction Site:
872 Blooming Grove Turnpike
New Windsor, NY 12553

Owner/Agent:

Designer/Contractor:
Robert Bee
H2M architects + engineers
538 Broadhollow Road
4th Floor East
Melville, NY 11747
6317568000

Additional Efficiency Package(s)

Credits: 1.0 Required 1.0 Proposed
Enhanced Interior Lighting Controls, 1.0 credit

Mechanical Systems List

Quantity System Type & Description

1 RTU-208 (Single Zone):
Heating: 1 each - Hydronic or Steam Coil, Hot Water, Capacity = 66 kBtu/h
No minimum efficiency requirement applies
Cooling: 1 each - Single Package DX Unit, Capacity = 33 kBtu/h, Air-Cooled Condenser, Air Economizer
Proposed Efficiency = 14.70 SEER, Required Efficiency: 14.00 SEER
Fan System: FAN SYSTEM 1 | Building – Compliance (Motor nameplate HP method) : Passes

Fans:
GX1 Exhaust, Constant Volume, 4250 CFM, 3.0 motor nameplate hp, 0.0 fan efficiency grade
GX2 Exhaust, Constant Volume, 250 CFM, 0.1 motor nameplate hp, 0.0 fan efficiency grade
GX3 Exhaust, Constant Volume, 250 CFM, 0.1 motor nameplate hp, 0.0 fan efficiency grade
GX4 Exhaust, Constant Volume, 325 CFM, 0.1 motor nameplate hp, 0.0 fan efficiency grade
TX1 Exhaust, Constant Volume, 700 CFM, 0.3 motor nameplate hp, 0.0 fan efficiency grade
TX2 Exhaust, Constant Volume, 100 CFM, 0.0 motor nameplate hp, 0.0 fan efficiency grade
TX3 Exhaust, Constant Volume, 100 CFM, 0.0 motor nameplate hp, 0.0 fan efficiency grade
ERXF122 Exhaust, Constant Volume, 58 CFM, 0.0 motor nameplate hp, 0.0 fan efficiency grade
RTU 208 Supply, Constant Volume, 1200 CFM, 1.0 motor nameplate hp, 0.0 fan efficiency grade

1 DOAS-1 (Single Zone):
Heating: 1 each - Hydronic or Steam Coil, Hot Water, Capacity = 296 kBtu/h
No minimum efficiency requirement applies
Cooling: 1 each - Single Package DX Unit, Capacity = 229 kBtu/h, Air-Cooled Condenser, Air Economizer
Proposed Efficiency = 11.00 EER, Required Efficiency: 10.80 EER + 12.2 IEER
Fan System: FAN SYSTEM 1 | Building – Compliance (Motor nameplate HP method) : Passes

Fans:
GX1 Exhaust, Constant Volume, 4250 CFM, 3.0 motor nameplate hp, 0.0 fan efficiency grade
GX2 Exhaust, Constant Volume, 250 CFM, 0.1 motor nameplate hp, 0.0 fan efficiency grade
GX3 Exhaust, Constant Volume, 250 CFM, 0.1 motor nameplate hp, 0.0 fan efficiency grade
GX4 Exhaust, Constant Volume, 325 CFM, 0.1 motor nameplate hp, 0.0 fan efficiency grade
TX1 Exhaust, Constant Volume, 700 CFM, 0.3 motor nameplate hp, 0.0 fan efficiency grade
TX2 Exhaust, Constant Volume, 100 CFM, 0.0 motor nameplate hp, 0.0 fan efficiency grade
TX3 Exhaust, Constant Volume, 100 CFM, 0.0 motor nameplate hp, 0.0 fan efficiency grade
ERXF122 Exhaust, Constant Volume, 58 CFM, 0.0 motor nameplate hp, 0.0 fan efficiency grade
RTU 208 Supply, Constant Volume, 1200 CFM, 1.0 motor nameplate hp, 0.0 fan efficiency grade

Quantity System Type & Description

2 CU-1,2 (Single Zone):
VRF Condensing Unit, Air Cooled w/ Heat Recovery Heat Pump
Heating Mode: Capacity = 164 kBtu/h,
No minimum efficiency requirement applies
Cooling Mode: Capacity = 168 kBtu/h,
No minimum efficiency requirement applies
Fan System: None

3 EU-18 (Single Zone):
Cooling: 1 each - VRF Zone Fan Unit, Capacity = 18 kBtu/h, No Economizer, Economizer exception: Heat Recovery System
No minimum efficiency requirement applies
Fan System: None

1 OU-1 (Single Zone):
VRF Condensing Unit, Air Cooled w/ Heat Recovery Heat Pump
Heating Mode: Capacity = 10 kBtu/h,
No minimum efficiency requirement applies
Cooling Mode: Capacity = 14 kBtu/h,
No minimum efficiency requirement applies
Fan System: None

7 EU-5 (Single Zone):
Cooling: 1 each - VRF Zone Fan Unit, Capacity = 5 kBtu/h, No Economizer, Economizer exception: Heat Recovery System
No minimum efficiency requirement applies
Fan System: None

2 EU-9 (Single Zone):
Cooling: 1 each - VRF Zone Fan Unit, Capacity = 9 kBtu/h, No Economizer, Economizer exception: Heat Recovery System
No minimum efficiency requirement applies
Fan System: None

4 FCU-36 (Single Zone):
Cooling: 1 each - VRF Zone Fan Unit, Capacity = 36 kBtu/h, No Economizer, Economizer exception: Heat Recovery System
No minimum efficiency requirement applies
Fan System: None

1 EU-12 (Single Zone):
Cooling: 1 each - VRF Zone Fan Unit, Capacity = 12 kBtu/h, No Economizer, Economizer exception: Heat Recovery System
No minimum efficiency requirement applies
Fan System: None

1 FCU-48 (Single Zone):
Cooling: 1 each - VRF Zone Fan Unit, Capacity = 48 kBtu/h, No Economizer, Economizer exception: Heat Recovery System
No minimum efficiency requirement applies
Fan System: None

1 IU-1 (Single Zone):
Cooling: 1 each - VRF Zone Fan Unit, Capacity = 12 kBtu/h, No Economizer, Economizer exception: Heat Recovery System
No minimum efficiency requirement applies
Fan System: None

1 WEH-112 (Single Zone):
Heating: 1 each - Unit Heater, Electric, Capacity = 5 kBtu/h
No minimum efficiency requirement applies
Fan System: None

3 CUH-A,B,126 (Single Zone):
Heating: 1 each - Unit Heater, Hot Water, Capacity = 10 kBtu/h
No minimum efficiency requirement applies
Fan System: None

4 UH-1,2,3,4 (Single Zone):
Heating: 1 each - Unit Heater, Hot Water, Capacity = 70 kBtu/h
No minimum efficiency requirement applies
Fan System: None

COM*check* Software Version 4.1.5.3

Inspection Checklist

Energy Code: 2018 IECC

Requirements: 89.0% were addressed directly in the COM*check* software

Text in the "Comments/Assumptions" column is provided by the user in the COMcheck Requirements screen. For each requirement, the user certifies that a code requirement will be met and how that is documented, or that an exception is being claimed. Where compliance is itemized in a separate table, a reference to that table is provided.

Section # & Req.ID	Plan Review	Complies?	Comments/Assumptions
C103.2 [PR1][1]	Plans and/or specifications provide all information with which compliance can be determined for the building envelope and document where exceptions to the standard are claimed.	☐Complies ☐Does Not ☐Not Observable ☐Not Applicable	Requirement will be met.
C103.2 [PR2][1]	Plans, specifications, and/or calculations provide all information with which compliance can be determined for the mechanical systems and equipment and document where exceptions to the standard are claimed. Load calculations per acceptable engineering standards and handbooks.	☐Complies ☐Does Not ☐Not Observable ☐Not Applicable	Requirement will be met.
C103.2 [PR4][1]	Plans, specifications, and/or calculations provide all information with which compliance can be determined for the interior lighting and electrical systems and equipment and document where exceptions to the standard are claimed. Information provided should include interior lighting power calculations, wattage of bulbs and ballasts, transformers and control devices.	☐Complies ☐Does Not ☐Not Observable ☐Not Applicable	
C103.2 [PR8][1]	Plans, specifications, and/or calculations provide all information with which compliance can be determined for the exterior lighting and electrical systems and equipment and document where exceptions to the standard are claimed. Information provided should include exterior lighting power calculations, wattage of bulbs and ballasts, transformers and control devices.	☐Complies ☐Does Not ☐Not Observable ☐Not Applicable	
C402.4.1 [PR10][1]	The vertical fenestration area <= 30 percent of the gross above-grade wall area.	☐Complies ☐Does Not ☐Not Observable ☐Not Applicable	
C402.4.1 [PR11][1]	The skylight area <= 3 percent of the gross roof area.	☐Complies ☐Does Not ☐Not Observable ☐Not Applicable	**Location on plans/spec:** does not apply

1	High Impact (Tier 1)	2	Medium Impact (Tier 2)	3	Low Impact (Tier 3)

COM*check* Software Version 4.1.5.3

Inspection Checklist

Energy Code: 2018 IECC

Requirements: 89.0% were addressed directly in the COM*check* software

Text in the "Comments/Assumptions" column is provided by the user in the COMcheck Requirements screen. For each requirement, the user certifies that a code requirement will be met and how that is documented, or that an exception is being claimed. Where compliance is itemized in a separate table, a reference to that table is provided.

Section # & Req.ID	Plan Review	Complies?	Comments/Assumptions
C103.2 [PR1][1]	Plans and/or specifications provide all information with which compliance can be determined for the building envelope and document where exceptions to the standard are claimed.	☐Complies ☐Does Not ☐Not Observable ☐Not Applicable	Requirement will be met.
C103.2 [PR2][1]	Plans, specifications, and/or calculations provide all information with which compliance can be determined for the mechanical systems and equipment and document where exceptions to the standard are claimed. Load calculations per acceptable engineering standards and handbooks.	☐Complies ☐Does Not ☐Not Observable ☐Not Applicable	Requirement will be met.
C103.2 [PR4][1]	Plans, specifications, and/or calculations provide all information with which compliance can be determined for the interior lighting and electrical systems and equipment and document where exceptions to the standard are claimed. Information provided should include interior lighting power calculations, wattage of bulbs and ballasts, transformers and control devices.	☐Complies ☐Does Not ☐Not Observable ☐Not Applicable	
C103.2 [PR8][1]	Plans, specifications, and/or calculations provide all information with which compliance can be determined for the exterior lighting and electrical systems and equipment and document where exceptions to the standard are claimed. Information provided should include exterior lighting power calculations, wattage of bulbs and ballasts, transformers and control devices.	☐Complies ☐Does Not ☐Not Observable ☐Not Applicable	
C402.4.1 [PR10][1]	The vertical fenestration area <= 30 percent of the gross above-grade wall area.	☐Complies ☐Does Not ☐Not Observable ☐Not Applicable	
C402.4.1 [PR11][1]	The skylight area <= 3 percent of the gross roof area.	☐Complies ☐Does Not ☐Not Observable ☐Not Applicable	**Location on plans/spec:** does not apply

1	High Impact (Tier 1)	2	Medium Impact (Tier 2)	3	Low Impact (Tier 3)

Project Title: Vails Gate Firehouse — Report date: 07/14/22
Data filename: X:\VGFD (Vails Gate Fire Dept)\VGFD2001-(Vails Gate FD-New Firehouse)\02-DisciplineFolders\Arch\Main Fire House\Comcheck.cck — Page 12 of 38

H2M architects + engineers
538 Broad Hollow Road, 4th Floor East
Melville, NY 11747
631.756.8000 • www.h2m.com

CONSULTANTS:

MARK	DATE	DESCRIPTION

REGISTERED ARCHITECT ROBERT BEE 032389 STATE OF NEW YORK

*ALTERATION OF THIS DOCUMENT EXCEPT BY A LICENSED PROFESSIONAL IS ILLEGAL.

DESIGNED BY:	DRAWN BY:	CHECKED BY:	REVIEWED BY:
KEM	JHG		

PROJECT No:	DATE:	SCALE:
VGFD2001	JULY 2022	AS SHOWN

CLIENT
VAILS GATE FIRE DISTRICT

New Storage Building (Phase I)
New Fire Station (Phase II)

872 Blooming Grove Turnpike
New Windsor, NY 12553

CONTRACT
CONTRACT G
GENERAL CONSTRUCTION

STATUS
FINAL BID DOCUMENT

SHEET TITLE
ARCHITECTURE
ENERGY COMPLIANCE
NEW FIRE STATION
PHASE 2

DRAWING No.
A2 011.00

C:\Users\jgazman\Documents\VGFD2001_Central21_A_jgazman.rvt
7/18/2022 8:17:18 AM

Section # & Req.ID	Plan Review	Complies?	Comments/Assumptions
C402.4.2 [PR14][1]	In enclosed spaces > 2,500 ft2 directly under a roof with ceiling heights >15 ft. and used as an office, lobby, atrium, concourse, corridor, storage, gymnasium/exercise center, convention center, automotive service, manufacturing, non-refrigerated warehouse, retail store, distribution/sorting area, transportation, or workshop, the following requirements apply: (a) the daylight zone under skylights is >= half the floor area; (b) the skylight area to daylight zone is >= 3 percent with a skylight VT >= 0.40; or a minimum skylight effective aperture >= 1 percent.	☐Complies ☐Does Not ☐Not Observable ☐Not Applicable	**Exception:** Requirement does not apply.
C406 [PR9][1]	Plans, specifications, and/or calculations provide all information with which compliance can be determined for the additional energy efficiency package options.	☐Complies ☐Does Not ☐Not Observable ☐Not Applicable	Requirement will be met.

Additional Comments/Assumptions:

1 High Impact (Tier 1) | 2 Medium Impact (Tier 2) | 3 Low Impact (Tier 3)

Section # & Req.ID	Footing / Foundation Inspection	Complies?	Comments/Assumptions
C303.2 [FO4][2]	Slab edge insulation installed per manufacturer's instructions.	☐Complies ☐Does Not ☐Not Observable ☐Not Applicable	Requirement will be met.
C303.2.1 [FO6][1]	Exterior insulation protected against damage, sunlight, moisture, wind, landscaping and equipment maintenance activities.	☐Complies ☐Does Not ☐Not Observable ☐Not Applicable	Requirement will be met.
C105 [FO3][2]	Installed slab-on-grade insulation type and R-value consistent with insulation specifications reported in plans and COMcheck reports.	☐Complies ☐Does Not ☐Not Observable ☐Not Applicable	*See the Envelope Assemblies table for values.*
C402.2.4 [FO7][2]	Slab edge insulation depth/length. Slab insulation extending away from building is covered by pavement or >= 10 inches of soil.	☐Complies ☐Does Not ☐Not Observable ☐Not Applicable	Requirement will be met. *See the Envelope Assemblies table for values.*
C402.2.6 [FO12][3]	Radiant heating systems panels insulated to >=R-3.5 on face opposite space being heated.	☐Complies ☐Does Not ☐Not Observable ☐Not Applicable	Requirement will be met. *See the Envelope Assemblies table for values.*
C403.12.2 C403.12.3 [FO9][3]	Snow/ice melting system and freeze protection systems have sensors and controls configured to limit service for pavement temperature and outdoor temperature, future connection to controls.	☐Complies ☐Does Not ☐Not Observable ☐Not Applicable	**Exception:** Requirement does not apply.

Additional Comments/Assumptions:

1 High Impact (Tier 1) | 2 Medium Impact (Tier 2) | 3 Low Impact (Tier 3)

Section # & Req.ID	Framing / Rough-In Inspection	Complies?	Comments/Assumptions
C303.1.3 [FR12][2]	Fenestration products rated in accordance with NFRC.	☐Complies ☐Does Not ☐Not Observable ☐Not Applicable	Requirement will be met.
C303.1.3 [FR13][1]	Fenestration products are certified as to performance labels or certificates provided.	☐Complies ☐Does Not ☐Not Observable ☐Not Applicable	Requirement will be met.
C402.4.3 [FR10][1]	Vertical fenestration SHGC value.	☐Complies ☐Does Not ☐Not Observable ☐Not Applicable	*See the Envelope Assemblies table for values.*
C402.4.3, C402.4.3.4 [FR8][1]	Vertical fenestration U-Factor.	☐Complies ☐Does Not ☐Not Observable ☐Not Applicable	*See the Envelope Assemblies table for values.*
C402.4.4 [FR14][2]	U-factor of opaque doors associated with the building thermal envelope meets requirements.	☐Complies ☐Does Not ☐Not Observable ☐Not Applicable	*See the Envelope Assemblies table for values.*
C402.5.1.2.1 [FR19][1]	The building envelope contains a continuous air barrier that is sealed in an approved manner and material permeability <= 0.004 dfm/ft2. Air barrier penetrations are sealed in an approved manner.	☐Complies ☐Does Not ☐Not Observable ☐Not Applicable	Requirement will be met.
C402.5.2, C402.5.4 [FR18][3]	Factory-built fenestration and doors are labeled as meeting air leakage requirements.	☐Complies ☐Does Not ☐Not Observable ☐Not Applicable	Requirement will be met.
C402.5.7 [FR17][3]	Vestibules are installed on all building entrances. Doors have self-closing devices.	☐Complies ☐Does Not ☐Not Observable ☐Not Applicable	Requirement will be met.

Additional Comments/Assumptions:

1 High Impact (Tier 1) | 2 Medium Impact (Tier 2) | 3 Low Impact (Tier 3)

Section # & Req.ID	Plumbing Rough-In Inspection	Complies?	Comments/Assumptions
C404.5, C404.5.1, C404.5.2 [PL6][3]	Heated water supply piping conforms to pipe length and volume requirements. Refer to section details.	☐Complies ☐Does Not ☐Not Observable ☐Not Applicable	Requirement will be met.
C404.5, C404.5.1, C404.5.2 [PL6][3]	Heated water supply piping conforms to pipe length and volume requirements. Refer to section details.	☐Complies ☐Does Not ☐Not Observable ☐Not Applicable	Requirement will be met.
C404.5, C404.5.1, C404.5.2 [PL6][3]	Heated water supply piping conforms to pipe length and volume requirements. Refer to section details.	☐Complies ☐Does Not ☐Not Observable ☐Not Applicable	Requirement will be met.
C404.5, C404.5.1, C404.5.2 [PL6][3]	Heated water supply piping conforms to pipe length and volume requirements. Refer to section details.	☐Complies ☐Does Not ☐Not Observable ☐Not Applicable	**Exception:** Requirement does not apply.
C404.5, C404.5.1, C404.5.2 [PL6][3]	Heated water supply piping conforms to pipe length and volume requirements. Refer to section details.	☐Complies ☐Does Not ☐Not Observable ☐Not Applicable	**Exception:** Requirement does not apply.
C404.5, C404.5.1, C404.5.2 [PL6][3]	Heated water supply piping conforms to pipe length and volume requirements. Refer to section details.	☐Complies ☐Does Not ☐Not Observable ☐Not Applicable	**Exception:** Requirement does not apply.
C404.5, C404.5.1, C404.5.2 [PL6][3]	Heated water supply piping conforms to pipe length and volume requirements. Refer to section details.	☐Complies ☐Does Not ☐Not Observable ☐Not Applicable	**Exception:** Requirement does not apply.
C404.5, C404.5.1, C404.5.2 [PL6][3]	Heated water supply piping conforms to pipe length and volume requirements. Refer to section details.	☐Complies ☐Does Not ☐Not Observable ☐Not Applicable	**Exception:** Requirement does not apply.
C404.5, C404.5.1, C404.5.2 [PL6][3]	Heated water supply piping conforms to pipe length and volume requirements. Refer to section details.	☐Complies ☐Does Not ☐Not Observable ☐Not Applicable	**Exception:** Requirement does not apply.
C404.5, C404.5.1, C404.5.2 [PL6][3]	Heated water supply piping conforms to pipe length and volume requirements. Refer to section details.	☐Complies ☐Does Not ☐Not Observable ☐Not Applicable	**Exception:** Requirement does not apply.

1 High Impact (Tier 1) | 2 Medium Impact (Tier 2) | 3 Low Impact (Tier 3)

Section # & Req.ID	Plumbing Rough-In Inspection	Complies?	Comments/Assumptions
C404.5, C404.5.1, C404.5.2 [PL6][3]	Heated water supply piping conforms to pipe length and volume requirements. Refer to section details.	☐Complies ☐Does Not ☐Not Observable ☐Not Applicable	**Exception:** Requirement does not apply.
C404.5, C404.5.1, C404.5.2 [PL6][3]	Heated water supply piping conforms to pipe length and volume requirements. Refer to section details.	☐Complies ☐Does Not ☐Not Observable ☐Not Applicable	Requirement will be met.
C404.5, C404.5.1, C404.5.2 [PL6][3]	Heated water supply piping conforms to pipe length and volume requirements. Refer to section details.	☐Complies ☐Does Not ☐Not Observable ☐Not Applicable	Requirement will be met.
C404.5, C404.5.1, C404.5.2 [PL6][3]	Heated water supply piping conforms to pipe length and volume requirements. Refer to section details.	☐Complies ☐Does Not ☐Not Observable ☐Not Applicable	Requirement will be met.
C404.6.3 [PL7][3]	Pumps that circulate water between a heater and storage tank have controls that limit operation from startup to <= 5 minutes after end of heating cycle.	☐Complies ☐Does Not ☐Not Observable ☐Not Applicable	**Exception:** Requirement does not apply.
C404.6.3 [PL7][3]	Pumps that circulate water between a heater and storage tank have controls that limit operation from startup to <= 5 minutes after end of heating cycle.	☐Complies ☐Does Not ☐Not Observable ☐Not Applicable	**Exception:** Requirement does not apply.
C404.6.3 [PL7][3]	Pumps that circulate water between a heater and storage tank have controls that limit operation from startup to <= 5 minutes after end of heating cycle.	☐Complies ☐Does Not ☐Not Observable ☐Not Applicable	**Exception:** Requirement does not apply.
C404.6.3 [PL7][3]	Pumps that circulate water between a heater and storage tank have controls that limit operation from startup to <= 5 minutes after end of heating cycle.	☐Complies ☐Does Not ☐Not Observable ☐Not Applicable	**Exception:** Requirement does not apply.
C404.6.3 [PL7][3]	Pumps that circulate water between a heater and storage tank have controls that limit operation from startup to <= 5 minutes after end of heating cycle.	☐Complies ☐Does Not ☐Not Observable ☐Not Applicable	**Exception:** Requirement does not apply.
C404.6.3 [PL7][3]	Pumps that circulate water between a heater and storage tank have controls that limit operation from startup to <= 5 minutes after end of heating cycle.	☐Complies ☐Does Not ☐Not Observable ☐Not Applicable	**Exception:** Requirement does not apply.
C404.6.3 [PL7][3]	Pumps that circulate water between a heater and storage tank have controls that limit operation from startup to <= 5 minutes after end of heating cycle.	☐Complies ☐Does Not ☐Not Observable ☐Not Applicable	**Exception:** Requirement does not apply.
C404.6.3 [PL7][3]	Pumps that circulate water between a heater and storage tank have controls that limit operation from startup to <= 5 minutes after end of heating cycle.	☐Complies ☐Does Not ☐Not Observable ☐Not Applicable	**Exception:** Requirement does not apply.

1 High Impact (Tier 1) | 2 Medium Impact (Tier 2) | 3 Low Impact (Tier 3)

Section # & Req.ID	Plumbing Rough-In Inspection	Complies?	Comments/Assumptions
C404.6.3 [PL7][3]	Pumps that circulate water between a heater and storage tank have controls that limit operation from startup to <= 5 minutes after end of heating cycle.	☐Complies ☐Does Not ☐Not Observable ☐Not Applicable	**Exception:** Requirement does not apply.
C404.6.3 [PL7][3]	Pumps that circulate water between a heater and storage tank have controls that limit operation from startup to <= 5 minutes after end of heating cycle.	☐Complies ☐Does Not ☐Not Observable ☐Not Applicable	**Exception:** Requirement does not apply.
C404.6.3 [PL7][3]	Pumps that circulate water between a heater and storage tank have controls that limit operation from startup to <= 5 minutes after end of heating cycle.	☐Complies ☐Does Not ☐Not Observable ☐Not Applicable	**Exception:** Requirement does not apply.
C404.6.3 [PL7][3]	Pumps that circulate water between a heater and storage tank have controls that limit operation from startup to <= 5 minutes after end of heating cycle.	☐Complies ☐Does Not ☐Not Observable ☐Not Applicable	Requirement will be met.
C404.6.3 [PL7][3]	Pumps that circulate water between a heater and storage tank have controls that limit operation from startup to <= 5 minutes after end of heating cycle.	☐Complies ☐Does Not ☐Not Observable ☐Not Applicable	**Exception:** Requirement does not apply.
C404.6.3 [PL7][3]	Pumps that circulate water between a heater and storage tank have controls that limit operation from startup to <= 5 minutes after end of heating cycle.	☐Complies ☐Does Not ☐Not Observable ☐Not Applicable	**Exception:** Requirement does not apply.
C404.7 [PL8][1]	Demand recirculation water systems have controls that start the pump upon receiving a signal from the action of a user of a fixture or appliance and limits the temperature of the water entering the cold-water piping to 104°F.	☐Complies ☐Does Not ☐Not Observable ☐Not Applicable	**Exception:** Requirement does not apply.
C404.7 [PL8][1]	Demand recirculation water systems have controls that start the pump upon receiving a signal from the action of a user of a fixture or appliance and limits the temperature of the water entering the cold-water piping to 104°F.	☐Complies ☐Does Not ☐Not Observable ☐Not Applicable	Requirement will be met.
C404.7 [PL8][1]	Demand recirculation water systems have controls that start the pump upon receiving a signal from the action of a user of a fixture or appliance and limits the temperature of the water entering the cold-water piping to 104°F.	☐Complies ☐Does Not ☐Not Observable ☐Not Applicable	**Exception:** Requirement does not apply.
C404.7 [PL8][1]	Demand recirculation water systems have controls that start the pump upon receiving a signal from the action of a user of a fixture or appliance and limits the temperature of the water entering the cold-water piping to 104°F.	☐Complies ☐Does Not ☐Not Observable ☐Not Applicable	**Exception:** Requirement does not apply.

1 High Impact (Tier 1) | 2 Medium Impact (Tier 2) | 3 Low Impact (Tier 3)

H2M architects + engineers
538 Broad Hollow Road, 4th Floor East
Melville, NY 11747
631.756.8000 • www.h2m.com

CONSULTANTS:

MARK	DATE	DESCRIPTION

REGISTERED ARCHITECT ROBERT BEE 032389 STATE OF NEW YORK

*ALTERATION OF THIS DOCUMENT EXCEPT BY A LICENSED PROFESSIONAL IS ILLEGAL.

DESIGNED BY:	DRAWN BY:	CHECKED BY:	REVIEWED BY:
KEM	JHG		

PROJECT No:	DATE:	SCALE:
VGFD2001	JULY 2022	AS SHOWN

CLIENT

VAILS GATE FIRE DISTRICT

New Storage Building (Phase I)
New Fire Station (Phase II)

872 Blooming Grove Turnpike
New Windsor, NY 12553

CONTRACT

CONTRACT G
GENERAL CONSTRUCTION

STATUS

FINAL BID DOCUMENT

SHEET TITLE

ARCHITECTURE
ENERGY COMPLIANCE
NEW FIRE STATION
PHASE 2

DRAWING No.

A2 012.00

C:\Users\jgazman\Documents\VGFD2001_Central21_A_jgazman.rvt
7/18/2022 8:17:20 AM

Section # & Req.ID	Plumbing Rough-In Inspection	Complies?	Comments/Assumptions
C404.7 [PLB]^{3}	Demand recirculation water systems have controls that start the pump upon receiving a signal from the action of a user of a fixture or appliance and limits the temperature of the water entering the cold-water piping to 104°F.	☐Complies ☐Does Not ☐Not Observable ☐Not Applicable	**Exception:** Requirement does not apply.
C404.7 [PLB]^{3}	Demand recirculation water systems have controls that start the pump upon receiving a signal from the action of a user of a fixture or appliance and limits the temperature of the water entering the cold-water piping to 104°F.	☐Complies ☐Does Not ☐Not Observable ☐Not Applicable	**Exception:** Requirement does not apply.
C404.7 [PLB]^{3}	Demand recirculation water systems have controls that start the pump upon receiving a signal from the action of a user of a fixture or appliance and limits the temperature of the water entering the cold-water piping to 104°F.	☐Complies ☐Does Not ☐Not Observable ☐Not Applicable	**Exception:** Requirement does not apply.
C404.7 [PLB]^{3}	Demand recirculation water systems have controls that start the pump upon receiving a signal from the action of a user of a fixture or appliance and limits the temperature of the water entering the cold-water piping to 104°F.	☐Complies ☐Does Not ☐Not Observable ☐Not Applicable	**Exception:** Requirement does not apply.
C404.7 [PLB]^{3}	Demand recirculation water systems have controls that start the pump upon receiving a signal from the action of a user of a fixture or appliance and limits the temperature of the water entering the cold-water piping to 104°F.	☐Complies ☐Does Not ☐Not Observable ☐Not Applicable	**Exception:** Requirement does not apply.
C404.7 [PLB]^{3}	Demand recirculation water systems have controls that start the pump upon receiving a signal from the action of a user of a fixture or appliance and limits the temperature of the water entering the cold-water piping to 104°F.	☐Complies ☐Does Not ☐Not Observable ☐Not Applicable	**Exception:** Requirement does not apply.
C404.7 [PLB]^{3}	Demand recirculation water systems have controls that start the pump upon receiving a signal from the action of a user of a fixture or appliance and limits the temperature of the water entering the cold-water piping to 104°F.	☐Complies ☐Does Not ☐Not Observable ☐Not Applicable	**Exception:** Requirement does not apply.
C404.7 [PLB]^{3}	Demand recirculation water systems have controls that start the pump upon receiving a signal from the action of a user of a fixture or appliance and limits the temperature of the water entering the cold-water piping to 104°F.	☐Complies ☐Does Not ☐Not Observable ☐Not Applicable	Requirement will be met.

1 High Impact (Tier 1) | 2 Medium Impact (Tier 2) | 3 Low Impact (Tier 3)

Section # & Req.ID	Plumbing Rough-In Inspection	Complies?	Comments/Assumptions
C404.7 [PLB]^{3}	Demand recirculation water systems have controls that start the pump upon receiving a signal from the action of a user of a fixture or appliance and limits the temperature of the water entering the cold-water piping to 104°F.	☐Complies ☐Does Not ☐Not Observable ☐Not Applicable	**Exception:** Requirement does not apply.
C404.7 [PLB]^{3}	Demand recirculation water systems have controls that start the pump upon receiving a signal from the action of a user of a fixture or appliance and limits the temperature of the water entering the cold-water piping to 104°F.	☐Complies ☐Does Not ☐Not Observable ☐Not Applicable	Requirement will be met.

Additional Comments/Assumptions:

1 High Impact (Tier 1) | 2 Medium Impact (Tier 2) | 3 Low Impact (Tier 3)

Section # & Req.ID	Mechanical Rough-In Inspection	Complies?	Comments/Assumptions
C402.2.6 [ME41]^{2}	Thermally ineffective panel surfaces of sensible heating panels have insulation >= R-3.5.	☐Complies ☐Does Not ☐Not Observable ☐Not Applicable	Requirement will be met.
C402.5.5, C403.2.4.3 [ME3]^{2}	Stair and elevator shaft vents have motorized dampers that automatically close. Reference section C403.7.7 for operational details.	☐Complies ☐Does Not ☐Not Observable ☐Not Applicable	
C403.11.3 [ME61]^{2}	HVAC piping insulation insulated in accordance with Table C403.11.3. Insulation exposed to weather is protected from damage and is provided with shielding from solar radiation.	☐Complies ☐Does Not ☐Not Observable ☐Not Applicable	Requirement will be met.
C403.11.3 [ME61]^{2}	HVAC piping insulation insulated in accordance with Table C403.11.3. Insulation exposed to weather is protected from damage and is provided with shielding from solar radiation.	☐Complies ☐Does Not ☐Not Observable ☐Not Applicable	Requirement will be met.
C403.11.3 [ME61]^{2}	HVAC piping insulation insulated in accordance with Table C403.11.3. Insulation exposed to weather is protected from damage and is provided with shielding from solar radiation.	☐Complies ☐Does Not ☐Not Observable ☐Not Applicable	Requirement will be met.
C403.11.3 [ME61]^{2}	HVAC piping insulation insulated in accordance with Table C403.11.3. Insulation exposed to weather is protected from damage and is provided with shielding from solar radiation.	☐Complies ☐Does Not ☐Not Observable ☐Not Applicable	Requirement will be met.
C403.11.3 [ME61]^{2}	HVAC piping insulation insulated in accordance with Table C403.11.3. Insulation exposed to weather is protected from damage and is provided with shielding from solar radiation.	☐Complies ☐Does Not ☐Not Observable ☐Not Applicable	Requirement will be met.
C403.11.3 [ME61]^{2}	HVAC piping insulation insulated in accordance with Table C403.11.3. Insulation exposed to weather is protected from damage and is provided with shielding from solar radiation.	☐Complies ☐Does Not ☐Not Observable ☐Not Applicable	Requirement will be met.
C403.11.3 [ME61]^{2}	HVAC piping insulation insulated in accordance with Table C403.11.3. Insulation exposed to weather is protected from damage and is provided with shielding from solar radiation.	☐Complies ☐Does Not ☐Not Observable ☐Not Applicable	Requirement will be met.
C403.11.3 [ME61]^{2}	HVAC piping insulation insulated in accordance with Table C403.11.3. Insulation exposed to weather is protected from damage and is provided with shielding from solar radiation.	☐Complies ☐Does Not ☐Not Observable ☐Not Applicable	Requirement will be met.

1 High Impact (Tier 1) | 2 Medium Impact (Tier 2) | 3 Low Impact (Tier 3)

Section # & Req.ID	Mechanical Rough-In Inspection	Complies?	Comments/Assumptions
C403.11.3 [ME61]^{2}	HVAC piping insulation insulated in accordance with Table C403.11.3. Insulation exposed to weather is protected from damage and is provided with shielding from solar radiation.	☐Complies ☐Does Not ☐Not Observable ☐Not Applicable	Requirement will be met.
C403.11.3 [ME61]^{2}	HVAC piping insulation insulated in accordance with Table C403.11.3. Insulation exposed to weather is protected from damage and is provided with shielding from solar radiation.	☐Complies ☐Does Not ☐Not Observable ☐Not Applicable	Requirement will be met.
C403.11.3 [ME61]^{2}	HVAC piping insulation insulated in accordance with Table C403.11.3. Insulation exposed to weather is protected from damage and is provided with shielding from solar radiation.	☐Complies ☐Does Not ☐Not Observable ☐Not Applicable	Requirement will be met.
C403.11.3 [ME61]^{2}	HVAC piping insulation insulated in accordance with Table C403.11.3. Insulation exposed to weather is protected from damage and is provided with shielding from solar radiation.	☐Complies ☐Does Not ☐Not Observable ☐Not Applicable	Requirement will be met.
C403.11.3 [ME61]^{2}	HVAC piping insulation insulated in accordance with Table C403.11.3. Insulation exposed to weather is protected from damage and is provided with shielding from solar radiation.	☐Complies ☐Does Not ☐Not Observable ☐Not Applicable	Requirement will be met.
C403.11.3 [ME61]^{2}	HVAC piping insulation insulated in accordance with Table C403.11.3. Insulation exposed to weather is protected from damage and is provided with shielding from solar radiation.	☐Complies ☐Does Not ☐Not Observable ☐Not Applicable	Requirement will be met.
C403.11.3 [ME61]^{2}	HVAC piping insulation insulated in accordance with Table C403.11.3. Insulation exposed to weather is protected from damage and is provided with shielding from solar radiation.	☐Complies ☐Does Not ☐Not Observable ☐Not Applicable	Requirement will be met.
C403.11.3 [ME61]^{2}	HVAC piping insulation insulated in accordance with Table C403.11.3. Insulation exposed to weather is protected from damage and is provided with shielding from solar radiation.	☐Complies ☐Does Not ☐Not Observable ☐Not Applicable	Requirement will be met.
C403.11.3 [ME61]^{2}	HVAC piping insulation insulated in accordance with Table C403.11.3. Insulation exposed to weather is protected from damage and is provided with shielding from solar radiation.	☐Complies ☐Does Not ☐Not Observable ☐Not Applicable	Requirement will be met.

1 High Impact (Tier 1) | 2 Medium Impact (Tier 2) | 3 Low Impact (Tier 3)

Section # & Req.ID	Mechanical Rough-In Inspection	Complies?	Comments/Assumptions
C403.8.1 [ME65]^{3}	HVAC fan systems at design conditions do not exceed allowable fan system motor nameplate hp or fan system bhp.	☐Complies ☐Does Not ☐Not Observable ☐Not Applicable	Requirement will be met. *See the Mechanical Systems list for values.*
C403.8.1 [ME65]^{3}	HVAC fan systems at design conditions do not exceed allowable fan system motor nameplate hp or fan system bhp.	☐Complies ☐Does Not ☐Not Observable ☐Not Applicable	Requirement will be met. *See the Mechanical Systems list for values.*
C403.8.1 [ME65]^{3}	HVAC fan systems at design conditions do not exceed allowable fan system motor nameplate hp or fan system bhp.	☐Complies ☐Does Not ☐Not Observable ☐Not Applicable	Requirement will be met. *See the Mechanical Systems list for values.*
C403.8.1 [ME65]^{3}	HVAC fan systems at design conditions do not exceed allowable fan system motor nameplate hp or fan system bhp.	☐Complies ☐Does Not ☐Not Observable ☐Not Applicable	Requirement will be met. *See the Mechanical Systems list for values.*
C403.8.1 [ME65]^{3}	HVAC fan systems at design conditions do not exceed allowable fan system motor nameplate hp or fan system bhp.	☐Complies ☐Does Not ☐Not Observable ☐Not Applicable	Requirement will be met. *See the Mechanical Systems list for values.*
C403.8.1 [ME65]^{3}	HVAC fan systems at design conditions do not exceed allowable fan system motor nameplate hp or fan system bhp.	☐Complies ☐Does Not ☐Not Observable ☐Not Applicable	Requirement will be met. *See the Mechanical Systems list for values.*
C403.8.3 [ME117]^{2}	Fans have efficiency grade (FEG) >= 67. The total efficiency of the fan at the design point of operation <= 15% of maximum total efficiency of the fan.	☐Complies ☐Does Not ☐Not Observable ☐Not Applicable	Requirement will be met.
C403.8.3 [ME117]^{2}	Fans have efficiency grade (FEG) >= 67. The total efficiency of the fan at the design point of operation <= 15% of maximum total efficiency of the fan.	☐Complies ☐Does Not ☐Not Observable ☐Not Applicable	**Exception:** Single fans with motor nameplate horsepowerof = 5 hp.
C403.8.3 [ME117]^{2}	Fans have efficiency grade (FEG) >= 67. The total efficiency of the fan at the design point of operation <= 15% of maximum total efficiency of the fan.	☐Complies ☐Does Not ☐Not Observable ☐Not Applicable	Requirement will be met.
C403.8.3 [ME117]^{2}	Fans have efficiency grade (FEG) >= 67. The total efficiency of the fan at the design point of operation <= 15% of maximum total efficiency of the fan.	☐Complies ☐Does Not ☐Not Observable ☐Not Applicable	**Exception:** Single fans with motor nameplate horsepowerof = 5 hp.
C403.8.3 [ME117]^{2}	Fans have efficiency grade (FEG) >= 67. The total efficiency of the fan at the design point of operation <= 15% of maximum total efficiency of the fan.	☐Complies ☐Does Not ☐Not Observable ☐Not Applicable	**Exception:** Single fans with motor nameplate horsepowerof = 5 hp.

1 High Impact (Tier 1) | 2 Medium Impact (Tier 2) | 3 Low Impact (Tier 3)

Section # & Req.ID	Mechanical Rough-In Inspection	Complies?	Comments/Assumptions
C403.8.3 [ME117]^{2}	Fans have efficiency grade (FEG) >= 67. The total efficiency of the fan at the design point of operation <= 15% of maximum total efficiency of the fan.	☐Complies ☐Does Not ☐Not Observable ☐Not Applicable	**Exception:** Single fans with motor nameplate horsepowerof = 5 hp.
C403.8.3 [ME117]^{2}	Fans have efficiency grade (FEG) >= 67. The total efficiency of the fan at the design point of operation <= 15% of maximum total efficiency of the fan.	☐Complies ☐Does Not ☐Not Observable ☐Not Applicable	**Exception:** Single fans with motor nameplate horsepowerof = 5 hp.
C403.8.3 [ME117]^{2}	Fans have efficiency grade (FEG) >= 67. The total efficiency of the fan at the design point of operation <= 15% of maximum total efficiency of the fan.	☐Complies ☐Does Not ☐Not Observable ☐Not Applicable	**Exception:** Single fans with motor nameplate horsepowerof = 5 hp.
C403.8.3 [ME117]^{2}	Fans have efficiency grade (FEG) >= 67. The total efficiency of the fan at the design point of operation <= 15% of maximum total efficiency of the fan.	☐Complies ☐Does Not ☐Not Observable ☐Not Applicable	**Exception:** Single fans with motor nameplate horsepowerof = 5 hp.
C403.8.3 [ME117]^{2}	Fans have efficiency grade (FEG) >= 67. The total efficiency of the fan at the design point of operation <= 15% of maximum total efficiency of the fan.	☐Complies ☐Does Not ☐Not Observable ☐Not Applicable	**Exception:** Single fans with motor nameplate horsepowerof = 5 hp.
C403.8.4 [ME142]^{2}	Motors for fans that are not less than 1/12 hp and less than 1 hp are electronically commutated motors or have a minimum motor efficiency of 70 percent. These motors have the means to adjust motor speed.	☐Complies ☐Does Not ☐Not Observable ☐Not Applicable	Requirement will be met.
C403.8.4 [ME142]^{2}	Motors for fans that are not less than 1/12 hp and less than 1 hp are electronically commutated motors or have a minimum motor efficiency of 70 percent. These motors have the means to adjust motor speed.	☐Complies ☐Does Not ☐Not Observable ☐Not Applicable	Requirement will be met.
C403.8.5 [ME143]^{2}	Each DX cooling system > 65 kBtu and chiller water/evaporative cooling system with fans > 1/4 hp are designed to vary the indoor fan airflow as a function of load and comply with detailed requirements of this section.	☐Complies ☐Does Not ☐Not Observable ☐Not Applicable	Requirement will be met.
C403.8.5 [ME143]^{2}	Each DX cooling system > 65 kBtu and chiller water/evaporative cooling system with fans > 1/4 hp are designed to vary the indoor fan airflow as a function of load and comply with detailed requirements of this section.	☐Complies ☐Does Not ☐Not Observable ☐Not Applicable	Requirement will be met.

1 High Impact (Tier 1) | 2 Medium Impact (Tier 2) | 3 Low Impact (Tier 3)

H2M architects + engineers
538 Broad Hollow Road, 4th Floor East
Melville, NY 11747
631.756.8000 • www.h2m.com

CONSULTANTS:

MARK	DATE	DESCRIPTION

REGISTERED ARCHITECT ROBERT BEE 032389 STATE OF NEW YORK

*ALTERATION OF THIS DOCUMENT EXCEPT BY A LICENSED PROFESSIONAL IS ILLEGAL.

DESIGNED BY:	DRAWN BY:	CHECKED BY:	REVIEWED BY:
KEM	JHG		

PROJECT No:	DATE:	SCALE:
VGFD2001	JULY 2022	AS SHOWN

CLIENT

VAILS GATE FIRE DISTRICT

New Storage Building (Phase I)
New Fire Station (Phase II)

872 Blooming Grove Turnpike
New Windsor, NY 12553

CONTRACT

CONTRACT G
GENERAL CONSTRUCTION

STATUS

FINAL BID DOCUMENT

SHEET TITLE

ARCHITECTURE
ENERGY COMPLIANCE
NEW FIRE STATION
PHASE 2

DRAWING No.

A2 013.00

C:\Users\jgazman\Documents\VGFD2001_Central21_A_jgazman.rvt
7/18/2022 8:17:23 AM

Section # & Req.ID	Mechanical Rough-In Inspection	Complies?	Comments/Assumptions
C403.12.1 [ME71][1]	Systems that heat outside the building envelope are radiant heat systems controlled by an occupancy sensing device or timer switch.	☐Complies ☐Does Not ☐Not Observable ☐Not Applicable	**Exception:** Requirement does not apply.
C403.2.3 [ME55][2]	HVAC equipment efficiency verified.	☐Complies ☐Does Not ☐Not Observable ☐Not Applicable	*See the Mechanical Systems list for values.*
C403.5.5 [ME113][2]	Fault detection and diagnostics installed with air-cooled unitary DX units having economizers.	☐Complies ☐Does Not ☐Not Observable ☐Not Applicable	Requirement will be met.
C403.2.2 [ME59][1]	Natural or mechanical ventilation is provided in accordance with International Mechanical Code Chapter 4. Mechanical ventilation has capability to reduce outdoor air supply to minimum per IMC Chapter 4.	☐Complies ☐Does Not ☐Not Observable ☐Not Applicable	Requirement will be met.
C403.7.1 [ME59][1]	Demand control ventilation provided for spaces >500 ft2 and >25 people/1000 ft2 occupant density and served by systems with air side economizer, auto modulating outside air damper control, or design airflow >3,000 cfm.	☐Complies ☐Does Not ☐Not Observable ☐Not Applicable	Requirement will be met.
C403.7.2 [ME115][3]	Enclosed parking garage ventilation has automatic contaminant detection and capacity to stage or modulate fans to 50% or less of design capacity.	☐Complies ☐Does Not ☐Not Observable ☐Not Applicable	Requirement will be met.
C403.7.6 [ME141][3]	HVAC systems serving guestrooms in Group R-1 buildings with > 50 guestrooms: Each guestroom is provided with controls that automatically manage temperature setpoint and ventilation (see sections C403.7.6.1 and C403.7.6.2).	☐Complies ☐Does Not ☐Not Observable ☐Not Applicable	**Exception:** Requirement does not apply.
C403.7.4 [ME57][1]	Exhaust air energy recovery on systems meeting Table C403.7.4(1) and C403.7.4(2).	☐Complies ☐Does Not ☐Not Observable ☐Not Applicable	Requirement will be met.
C403.7.5 [ME116][3]	Kitchen exhaust systems comply with replacement air and conditioned supply air limitations, and satisfy hood rating requirements and maximum exhaust rate criteria.	☐Complies ☐Does Not ☐Not Observable ☐Not Applicable	Requirement will be met.
C403.11.1 , C403.11.2 [ME60][2]	HVAC ducts and plenums insulated in accordance with C403.11.1 and constructed in accordance with C403.11.2. verification may need to occur during Foundation inspection.	☐Complies ☐Does Not ☐Not Observable ☐Not Applicable	Requirement will be met.
C403.5, C403.5.1, C403.5.2 [ME62][1]	Air economizers provided where required, meet the requirements for design capacity, control signal, ventilation controls, high-limit shut-off, integrated economizer control, and provide a means to relieve excess outside air during operation.	☐Complies ☐Does Not ☐Not Observable ☐Not Applicable	Requirement will be met.

1 High Impact (Tier 1) | 2 Medium Impact (Tier 2) | 3 Low Impact (Tier 3)

Section # & Req.ID	Mechanical Rough-In Inspection	Complies?	Comments/Assumptions
C403.5.3.3 [ME124][1]	Air economizers automatically reduce outdoor air intake to the design minimum outdoor air quantity when outdoor air intake will not reduce cooling energy usage. See Table C403.5.3.3 for applicable device types and climate zones.	☐Complies ☐Does Not ☐Not Observable ☐Not Applicable	Requirement will be met.
C403.5.3.4 [ME125][1]	System capable of relieving excess outdoor air during air economizer operation to prevent overpressurizing the building. The relief air outlet located to avoid recirculation into the building.	☐Complies ☐Does Not ☐Not Observable ☐Not Applicable	Requirement will be met.
C403.5.3.5 [ME126][1]	Return, exhaust/relief and outdoor air dampers used in economizers have motorized dampers that automatically shut when not in use and meet maximum leakage rates. Reference section C403.7.7 for details.	☐Complies ☐Does Not ☐Not Observable ☐Not Applicable	Requirement will be met.
C403.4.3 [ME69][2]	The heating of fluids in hydronic systems that have been previously mechanically cooled, and the cooling of fluids that have been previously mechanically heated are limited in accordance with Sections C403.4.3.1-C403.4.3.3. Single boiler systems >500,000 Btu/h have multistaged or modulating burner.	☐Complies ☐Does Not ☐Not Observable ☐Not Applicable	Requirement will be met.
C403.4.3.1 [ME50][2]	Three-pipe hydronic systems using a common return for hot and chilled water are not used.	☐Complies ☐Does Not ☐Not Observable ☐Not Applicable	Requirement will be met.
C403.4.3.1 [ME50][2]	Three-pipe hydronic systems using a common return for hot and chilled water are not used.	☐Complies ☐Does Not ☐Not Observable ☐Not Applicable	Requirement will be met.
C403.4.3.1 [ME50][2]	Three-pipe hydronic systems using a common return for hot and chilled water are not used.	☐Complies ☐Does Not ☐Not Observable ☐Not Applicable	Requirement will be met.
C403.4.3.1 [ME50][2]	Three-pipe hydronic systems using a common return for hot and chilled water are not used.	☐Complies ☐Does Not ☐Not Observable ☐Not Applicable	Requirement will be met.

1 High Impact (Tier 1) | 2 Medium Impact (Tier 2) | 3 Low Impact (Tier 3)

Section # & Req.ID	Mechanical Rough-In Inspection	Complies?	Comments/Assumptions
C403.4.3.3.2 [ME121][3]	Closed-circuit cooling tower within heat pump loop have either automatic bypass valve or lower leakage positive closure dampers. Open-circuit tower within heat pump loop have automatic valve to bypass all heat pump water flow around the tower. Open- or closed-circuit cooling towers used in conjunction with a separate heat exchanger have heat loss by shutting down the circulation pump on the cooling tower loop. Open- or closed circuit cooling towers have a separate heat exchanger to isolate the cooling tower from the heat pump loop, and heat loss is controlled by shutting down the circulation pump on the cooling tower loop.	☐Complies ☐Does Not ☐Not Observable ☐Not Applicable	**Exception:** Requirement does not apply.
C403.4.3.3.2 [ME121][3]	Closed-circuit cooling tower within heat pump loop have either automatic bypass valve or lower leakage positive closure dampers. Open-circuit tower within heat pump loop have automatic valve to bypass all heat pump water flow around the tower. Open- or closed-circuit cooling towers used in conjunction with a separate heat exchanger have heat loss by shutting down the circulation pump on the cooling tower loop. Open- or closed circuit cooling towers have a separate heat exchanger to isolate the cooling tower from the heat pump loop, and heat loss is controlled by shutting down the circulation pump on the cooling tower loop.	☐Complies ☐Does Not ☐Not Observable ☐Not Applicable	**Exception:** Requirement does not apply.
C403.4.3.3.2 [ME121][3]	Closed-circuit cooling tower within heat pump loop have either automatic bypass valve or lower leakage positive closure dampers. Open-circuit tower within heat pump loop have automatic valve to bypass all heat pump water flow around the tower. Open- or closed-circuit cooling towers used in conjunction with a separate heat exchanger have heat loss by shutting down the circulation pump on the cooling tower loop. Open- or closed circuit cooling towers have a separate heat exchanger to isolate the cooling tower from the heat pump loop, and heat loss is controlled by shutting down the circulation pump on the cooling tower loop.	☐Complies ☐Does Not ☐Not Observable ☐Not Applicable	**Exception:** Requirement does not apply.
C403.4.3.3.3 [ME28][3]	Two-position automatic valve interlocked to shut off water flow when hydronic heat pump with pumping system >10 hp is off.	☐Complies ☐Does Not ☐Not Observable ☐Not Applicable	Requirement will be met.
C403.4.4 [ME68][3]	Hydronic systems greater than 300,000 Btu/h designed for variable fluid flow. See section language for full details.	☐Complies ☐Does Not ☐Not Observable ☐Not Applicable	Requirement will be met.

1 High Impact (Tier 1) | 2 Medium Impact (Tier 2) | 3 Low Impact (Tier 3)

Section # & Req.ID	Mechanical Rough-In Inspection	Complies?	Comments/Assumptions
C403.4.5 [ME26][2]	Chilled water plants with multiple chillers have capability to reduce flow automatically through the chiller plant when a chiller is shut down. Boiler plants with multiple boilers have the capability to reduce flow automatically through the boiler plant when a boiler is shut down.	☐Complies ☐Does Not ☐Not Observable ☐Not Applicable	Requirement will be met.
C403.4.5 [ME26][2]	Chilled water plants with multiple chillers have capability to reduce flow automatically through the chiller plant when a chiller is shut down. Boiler plants with multiple boilers have the capability to reduce flow automatically through the boiler plant when a boiler is shut down.	☐Complies ☐Does Not ☐Not Observable ☐Not Applicable	Requirement will be met.
C403.4.5 [ME26][2]	Chilled water plants with multiple chillers have capability to reduce flow automatically through the chiller plant when a chiller is shut down. Boiler plants with multiple boilers have the capability to reduce flow automatically through the boiler plant when a boiler is shut down.	☐Complies ☐Does Not ☐Not Observable ☐Not Applicable	Requirement will be met.
C403.4.5 [ME26][2]	Chilled water plants with multiple chillers have capability to reduce flow automatically through the chiller plant when a chiller is shut down. Boiler plants with multiple boilers have the capability to reduce flow automatically through the boiler plant when a boiler is shut down.	☐Complies ☐Does Not ☐Not Observable ☐Not Applicable	Requirement will be met.
C403.4.1.4 [ME63][2]	Heating for vestibules and air curtains with integral heating include automatic controls that shut off the heating system when outdoor air temperatures > 45F. Vestibule heating and cooling systems controlled by a thermostat in the vestibule with heating setpoint <= 60F and cooling setpoint >= 80F.	☐Complies ☐Does Not ☐Not Observable ☐Not Applicable	Requirement will be met.
C403.9.5 [ME31][2]	Condenser heat recovery system that can heat water to 85 °F or provide 60% of peak heat rejection is installed for preheating of service hot water.	☐Complies ☐Does Not ☐Not Observable ☐Not Applicable	**Exception:** Total installed heat capacity of water cooled systems = 6 MMBtu/h of heat rejection.
C403.9.5 [ME31][2]	Condenser heat recovery system that can heat water to 85 °F or provide 60% of peak heat rejection is installed for preheating of service hot water.	☐Complies ☐Does Not ☐Not Observable ☐Not Applicable	**Exception:** Total installed heat capacity of water cooled systems = 6 MMBtu/h of heat rejection.
C403.9.5 [ME31][2]	Condenser heat recovery system that can heat water to 85 °F or provide 60% of peak heat rejection is installed for preheating of service hot water.	☐Complies ☐Does Not ☐Not Observable ☐Not Applicable	**Exception:** Total installed heat capacity of water cooled systems = 6 MMBtu/h of heat rejection.
C403.9.5 [ME31][2]	Condenser heat recovery system that can heat water to 85 °F or provide 60% of peak heat rejection is installed for preheating of service hot water.	☐Complies ☐Does Not ☐Not Observable ☐Not Applicable	**Exception:** Total installed heat capacity of water cooled systems = 6 MMBtu/h of heat rejection.

1 High Impact (Tier 1) | 2 Medium Impact (Tier 2) | 3 Low Impact (Tier 3)

Section # & Req.ID	Mechanical Rough-In Inspection	Complies?	Comments/Assumptions
C403.3.3 [ME35][1]	Hot gas bypass limited to: <=240 kBtu/h – 50% >240 kBtu/h – 25%	☐Complies ☐Does Not ☐Not Observable ☐Not Applicable	Requirement will be met.
C403.3.3 [ME35][1]	Hot gas bypass limited to: <=240 kBtu/h – 50% >240 kBtu/h – 25%	☐Complies ☐Does Not ☐Not Observable ☐Not Applicable	Requirement will be met.
C408.2.2.1 [ME53][1]	Air outlets and zone terminal devices have means for air balancing.	☐Complies ☐Does Not ☐Not Observable ☐Not Applicable	Requirement will be met.
C408.2.2.2 [ME54][1]	HVAC hydronic heating and cooling coils have means to balance and have pressure test connections.	☐Complies ☐Does Not ☐Not Observable ☐Not Applicable	Requirement will be met.
C408.2.2.2 [ME54][1]	HVAC hydronic heating and cooling coils have means to balance and have pressure test connections.	☐Complies ☐Does Not ☐Not Observable ☐Not Applicable	Requirement will be met.
C408.2.2.2 [ME54][1]	HVAC hydronic heating and cooling coils have means to balance and have pressure test connections.	☐Complies ☐Does Not ☐Not Observable ☐Not Applicable	Requirement will be met.
C408.2.2.2 [ME54][1]	HVAC hydronic heating and cooling coils have means to balance and have pressure test connections.	☐Complies ☐Does Not ☐Not Observable ☐Not Applicable	Requirement will be met.
C403.5, C403.5.1, C403.5.2 [ME123][3]	Refrigerated display cases, walk-in coolers or walk-in freezers served by remote compressors and remote condensers not located in a condensing unit. have fan-powered condensers that comply with Sections C403.5.1 and refrigeration compressor systems that comply with C403.5.2..	☐Complies ☐Does Not ☐Not Observable ☐Not Applicable	**Exception:** Requirement does not apply.

Additional Comments/Assumptions:

1 High Impact (Tier 1) | 2 Medium Impact (Tier 2) | 3 Low Impact (Tier 3)

Section # & Req.ID	Rough-In Electrical Inspection	Complies?	Comments/Assumptions
C405.2.2.2 [EL22][1]	Spaces required to have light-reduction controls have a manual control that allows the occupant to reduce the connected lighting load in a reasonably uniform illumination pattern >= 50 percent.	☐Complies ☐Does Not ☐Not Observable ☐Not Applicable	
C405.2.1.C405.2.1.1 [EL18][1]	Occupancy sensors installed in classrooms/lecture/training rooms, conference/meeting/multipurpose rooms, copy/print rooms, lounges/breakrooms, enclosed offices, open plan office areas, restrooms, storage rooms, locker rooms, warehouse storage areas, and other spaces <= 300 sqft that are enclosed by floor-to-ceiling height partitions. Reference section language C405.2.1.2 for control function in warehouses and section C405.2.1.3 for open plan office spaces.	☐Complies ☐Does Not ☐Not Observable ☐Not Applicable	
C405.2.1.2 [EL19][1]	Occupancy sensors control function in warehouses: In warehouses, the lighting in aisleways and open areas is controlled with occupant sensors that automatically reduce lighting power by 50% or more when the areas are unoccupied. The occupant sensors control lighting in each aisleway independently and do not control lighting beyond the aisleway being controlled by the sensor.	☐Complies ☐Does Not ☐Not Observable ☐Not Applicable	
C405.2.1.3 [EL20][1]	Occupant sensor control function in open plan office areas: Occupant sensor controls in open office spaces >= 300 sq.ft. have controls 1) configured so that general lighting can be controlled separately in control zones with floor areas <= 600 sq.ft. within the space, 2) automatically turn off general lighting in all control zones within 20 minutes after all occupants have left the space, 3) are configured so that general lighting power in each control zone is reduced by >= 80% of the full zone general lighting power within 20 minutes of all occupants leaving that control zone, and 4) are configured such that any daylight responsive control will activate space general lighting or control zone general lighting only when occupancy for the same area is detected.	☐Complies ☐Does Not ☐Not Observable ☐Not Applicable	
C405.2.2.C405.2.2.1 C405.2.2.2 [EL21][1]	Each area not served by occupancy sensors (per C405.2.1) have time-switch controls and functions detailed in sections C405.2.2.1 and C405.2.2.2.	☐Complies ☐Does Not ☐Not Observable ☐Not Applicable	

1 High Impact (Tier 1) | 2 Medium Impact (Tier 2) | 3 Low Impact (Tier 3)

H2M architects + engineers
538 Broad Hollow Road, 4th Floor East
Melville, NY 11747
631.756.8000 • www.h2m.com

CONSULTANTS:

MARK	DATE	DESCRIPTION

REGISTERED ARCHITECT ROBERT BEE 032389 STATE OF NEW YORK

"ALTERATION OF THIS DOCUMENT EXCEPT BY A LICENSED PROFESSIONAL IS ILLEGAL"

DESIGNED BY:	DRAWN BY:	CHECKED BY:	REVIEWED BY:
KEM	JHG		

PROJECT No:	DATE:	SCALE:
VGFD2001	JULY 2022	AS SHOWN

CLIENT

VAILS GATE FIRE DISTRICT

New Storage Building (Phase I)
New Fire Station (Phase II)

872 Blooming Grove Turnpike
New Windsor, NY 12553

CONTRACT

CONTRACT G
GENERAL CONSTRUCTION

STATUS

FINAL BID DOCUMENT

SHEET TITLE

ARCHITECTURE
ENERGY COMPLIANCE
NEW FIRE STATION
PHASE 2

DRAWING No.

A2 014.00

C:\Users\jgazman\Documents\VGFD2001_Central21_A_jgazman.rvt
7/19/2022 8:17:26 AM

Section # & Req.ID	Rough-In Electrical Inspection	Complies?	Comments/Assumptions
C405.2.3, C405.2.3.1, C405.2.3.2 [EL23][3]	Daylight zones provided with individual controls that control the lights independent of general area lighting. See code section C405.2.3 Daylight-responsive controls for applicable spaces. C405.2.3.1 Daylight responsive control function and section C405.2.3.2 Sidelit zone.	☐Complies ☐Does Not ☐Not Observable ☐Not Applicable	
C405.2.4 [EL26][1]	Separate lighting control devices for specific uses installed per approved lighting plans.	☐Complies ☐Does Not ☐Not Observable ☐Not Applicable	
C405.2.4 [EL27][1]	Additional interior lighting power allowed for special functions per the approved lighting plans and is automatically controlled and separated from general lighting.	☐Complies ☐Does Not ☐Not Observable ☐Not Applicable	
C405.2.5 [EL28][3rd]	Automatic lighting controls for exterior lighting installed. Controls will be daylight controlled, set based on business operation time-of-day, or reduce connected lighting > 30%.	☐Complies ☐Does Not ☐Not Observable ☐Not Applicable	
C405.3 [EL6][1]	Exit signs do not exceed 5 watts per face.	☐Complies ☐Does Not ☐Not Observable ☐Not Applicable	
C405.6 [EL26][2]	Low-voltage dry-type distribution electric transformers meet the minimum efficiency requirements of Table C405.6.	☐Complies ☐Does Not ☐Not Observable ☐Not Applicable	
C405.7 [EL27][2]	Electric motors meet the minimum efficiency requirements of Tables C405.7(1) through C405.7(4). Efficiency verified through certification under an approved certification program or the equipment efficiency ratings shall be provided by motor manufacturer (where certification programs do not exist).	☐Complies ☐Does Not ☐Not Observable ☐Not Applicable	
C405.8.2, C405.8.2.1 [EL28][2]	Escalators and moving walks comply with ASME A17.1/CSA B44 and have automatic controls configured to reduce speed to the minimum permitted speed in accordance with ASME A17.1/CSA B44 or applicable local code when not conveying passengers.	☐Complies ☐Does Not ☐Not Observable ☐Not Applicable	**Exception:** Requirement does not apply.
C405.9 [EL29][2]	Total voltage drop across the combination of feeders and branch circuits <= 5%.	☐Complies ☐Does Not ☐Not Observable ☐Not Applicable	

Additional Comments/Assumptions:

1 High Impact (Tier 1) | 2 Medium Impact (Tier 2) | 3 Low Impact (Tier 3)

Section # & Req.ID	Insulation Inspection	Complies?	Comments/Assumptions
C303.1 [IN3][1]	Roof insulation installed per manufacturer's instructions. Blown or poured loose-fill insulation is installed only where the roof slope is <=3 in 12.	☐Complies ☐Does Not ☐Not Observable ☐Not Applicable	Requirement will be met.
C402.2.1 [IN20][1]	Insulation installed on a suspended ceiling having ceiling tiles is not being specified for roof/ceiling assemblies. Continuous insulation board installed in 2 or more layers with edge joints offset between layers.	☐Complies ☐Does Not ☐Not Observable ☐Not Applicable	**Exception:** Requirement does not apply.
C303.1 [IN10][2]	Building envelope insulation is labeled with R-value or insulation certificate providing R-value and other relevant data.	☐Complies ☐Does Not ☐Not Observable ☐Not Applicable	Requirement will be met.
C303.2 [IN7][1]	Above-grade wall insulation installed per manufacturer's instructions.	☐Complies ☐Does Not ☐Not Observable ☐Not Applicable	Requirement will be met.
C303.2.1 [IN14][2]	Exterior insulation is protected from damage with a protective material. Verification for exposed foundation insulation may need to occur during Foundation inspection.	☐Complies ☐Does Not ☐Not Observable ☐Not Applicable	**Exception:** Requirement does not apply.
C105 [IN6][1]	Installed above-grade wall insulation type and R-value consistent with insulation specifications reported in plans and COMcheck reports.	☐Complies ☐Does Not ☐Not Observable ☐Not Applicable	*See the Envelope Assemblies table for values.*
C402.2.3 [IN8][2]	Installed floor insulation type and R-value consistent with insulation specifications reported in plans and COMcheck reports.	☐Complies ☐Does Not ☐Not Observable ☐Not Applicable	*See the Envelope Assemblies table for values.*
C402.2.6 [IN18][1]	Radiant panels and associated components, designed for heat transfer from the panel surfaces to the occupants or indoor space are insulated with a minimum of R-3.5.	☐Complies ☐Does Not ☐Not Observable ☐Not Applicable	**Exception:** Requirement does not apply.
C105 [IN2][1]	Installed roof insulation type and R-value consistent with insulation specifications reported in plans and COMcheck reports. For some ceiling systems, verification may need to occur during Framing Inspection.	☐Complies ☐Does Not ☐Not Observable ☐Not Applicable	*See the Envelope Assemblies table for values.*
C402.5.1.1 [IN1][1]	All sources of air leakage in the building thermal envelope are sealed, caulked, gasketed, weather stripped or wrapped with moisture vapor-permeable wrapping material to minimize air leakage.	☐Complies ☐Does Not ☐Not Observable ☐Not Applicable	Requirement will be met.

Additional Comments/Assumptions:

1 High Impact (Tier 1) | 2 Medium Impact (Tier 2) | 3 Low Impact (Tier 3)

Section # & Req.ID	Final Inspection	Complies?	Comments/Assumptions
C303.3, C408.2.5.2 [FI17][1]	Furnished O&M instructions for systems and equipment to the building owner or designated representative.	☐Complies ☐Does Not ☐Not Observable ☐Not Applicable	
C303.3, C408.2.5.3 [FI8][3]	Furnished O&M manuals for HVAC systems within 90 days of system acceptance.	☐Complies ☐Does Not ☐Not Observable ☐Not Applicable	Requirement will be met.
C402.5.6 [FI37][1]	Weatherseals installed on all loading dock cargo door openings and provide direct contact along the top and sides of vehicles parked in the doorway.	☐Complies ☐Does Not ☐Not Observable ☐Not Applicable	**Exception:** Requirement does not apply.
C402.5.6 [FI37][2]	Weatherseals installed on all loading dock cargo door openings and provide direct contact along the top and sides of vehicles parked in the doorway.	☐Complies ☐Does Not ☐Not Observable ☐Not Applicable	**Exception:** Requirement does not apply.
C402.5.6 [FI37][1]	Weatherseals installed on all loading dock cargo door openings and provide direct contact along the top and sides of vehicles parked in the doorway.	☐Complies ☐Does Not ☐Not Observable ☐Not Applicable	**Exception:** Requirement does not apply.
C402.5.6 [FI37][1]	Weatherseals installed on all loading dock cargo door openings and provide direct contact along the top and sides of vehicles parked in the doorway.	☐Complies ☐Does Not ☐Not Observable ☐Not Applicable	**Exception:** Requirement does not apply.
C402.5.8 [FI26][3]	Recessed luminaires in thermal envelope to limit infiltration and be IC rated and labeled. Seal between interior finish and luminaire housing.	☐Complies ☐Does Not ☐Not Observable ☐Not Applicable	**Exception:** Requirement does not apply.
C403.2.2 [FI27][1]	HVAC systems and equipment capacity does not exceed calculated loads.	☐Complies ☐Does Not ☐Not Observable ☐Not Applicable	Requirement will be met.
C403.2.4.1 [FI47][3]	Heating and cooling to each zone is controlled by a thermostat control. Minimum one humidity control device per installed humidification/dehumidification system.	☐Complies ☐Does Not ☐Not Observable ☐Not Applicable	Requirement will be met.
C403.2.4.1 [FI47][3]	Heating and cooling to each zone is controlled by a thermostat control. Minimum one humidity control device per installed humidification/dehumidification system.	☐Complies ☐Does Not ☐Not Observable ☐Not Applicable	Requirement will be met.
C403.2.4.1 [FI47][3]	Heating and cooling to each zone is controlled by a thermostat control. Minimum one humidity control device per installed humidification/dehumidification system.	☐Complies ☐Does Not ☐Not Observable ☐Not Applicable	Requirement will be met.

1 High Impact (Tier 1) | 2 Medium Impact (Tier 2) | 3 Low Impact (Tier 3)

Section # & Req.ID	Final Inspection	Complies?	Comments/Assumptions
C403.2.4.1 [FI47][3]	Heating and cooling to each zone is controlled by a thermostat control. Minimum one humidity control device per installed humidification/dehumidification system.	☐Complies ☐Does Not ☐Not Observable ☐Not Applicable	Requirement will be met.
C403.2.4.1 [FI47][3]	Heating and cooling to each zone is controlled by a thermostat control. Minimum one humidity control device per installed humidification/dehumidification system.	☐Complies ☐Does Not ☐Not Observable ☐Not Applicable	Requirement will be met.
C403.2.4.1 [FI47][3]	Heating and cooling to each zone is controlled by a thermostat control. Minimum one humidity control device per installed humidification/dehumidification system.	☐Complies ☐Does Not ☐Not Observable ☐Not Applicable	Requirement will be met.
C403.2.4.1 [FI47][3]	Heating and cooling to each zone is controlled by a thermostat control. Minimum one humidity control device per installed humidification/dehumidification system.	☐Complies ☐Does Not ☐Not Observable ☐Not Applicable	Requirement will be met.
C403.2.4.1 [FI47][3]	Heating and cooling to each zone is controlled by a thermostat control. Minimum one humidity control device per installed humidification/dehumidification system.	☐Complies ☐Does Not ☐Not Observable ☐Not Applicable	Requirement will be met.
C403.2.4.1 [FI47][3]	Heating and cooling to each zone is controlled by a thermostat control. Minimum one humidity control device per installed humidification/dehumidification system.	☐Complies ☐Does Not ☐Not Observable ☐Not Applicable	Requirement will be met.
C403.2.4.1 [FI47][3]	Heating and cooling to each zone is controlled by a thermostat control. Minimum one humidity control device per installed humidification/dehumidification system.	☐Complies ☐Does Not ☐Not Observable ☐Not Applicable	Requirement will be met.
C403.2.4.1 [FI47][3]	Heating and cooling to each zone is controlled by a thermostat control. Minimum one humidity control device per installed humidification/dehumidification system.	☐Complies ☐Does Not ☐Not Observable ☐Not Applicable	Requirement will be met.
C403.2.4.1 [FI47][3]	Heating and cooling to each zone is controlled by a thermostat control. Minimum one humidity control device per installed humidification/dehumidification system.	☐Complies ☐Does Not ☐Not Observable ☐Not Applicable	Requirement will be met.

1 High Impact (Tier 1) | 2 Medium Impact (Tier 2) | 3 Low Impact (Tier 3)

Section # & Req.ID	Final Inspection	Complies?	Comments/Assumptions
C403.2.4.1 [FI47][3]	Heating and cooling to each zone is controlled by a thermostat control. Minimum one humidity control device per installed humidification/dehumidification system.	☐Complies ☐Does Not ☐Not Observable ☐Not Applicable	Requirement will be met.
C403.2.4.1.1 [FI42][3]	Heat pump controls prevent supplemental electric resistance heat from coming on when not needed.	☐Complies ☐Does Not ☐Not Observable ☐Not Applicable	Requirement will be met.
C403.2.4.1.1 [FI42][3]	Heat pump controls prevent supplemental electric resistance heat from coming on when not needed.	☐Complies ☐Does Not ☐Not Observable ☐Not Applicable	
C403.4.1.2 [FI38][3]	Thermostatic controls have a 5 °F deadband.	☐Complies ☐Does Not ☐Not Observable ☐Not Applicable	Requirement will be met.
C403.2.4.1.3 [FI20][3]	Temperature controls have setpoint overlap restrictions.	☐Complies ☐Does Not ☐Not Observable ☐Not Applicable	Requirement will be met.
C403.2.4.2 [FI39][3]	Each zone equipped with setback controls using automatic time clock or programmable control system.	☐Complies ☐Does Not ☐Not Observable ☐Not Applicable	Requirement will be met.
C403.2.4.2.1, C403.2.4.2.2 [FI40][3]	Automatic Controls: Setback to 55°F (heat) and 85°F (cool); 7-day clock, 2-hour occupant override, 10-hour backup	☐Complies ☐Does Not ☐Not Observable ☐Not Applicable	Requirement will be met.
C403.2.4.2.3 [FI41][3]	Systems include optimum start controls.	☐Complies ☐Does Not ☐Not Observable ☐Not Applicable	Requirement will be met.
C403.2.4.2.3 [FI41][3]	Systems include optimum start controls.	☐Complies ☐Does Not ☐Not Observable ☐Not Applicable	Requirement will be met.
C405.4.1 [FI18][1]	Interior installed lamp and fixture lighting power is consistent with what is shown on the approved lighting plans, demonstrating proposed watts are less than or equal to allowed watts.	☐Complies ☐Does Not ☐Not Observable ☐Not Applicable	*See the Interior Lighting fixture schedule for values.*
C405.5.1 [FI19][1]	Exterior lighting power is consistent with what is shown on the approved lighting plans, demonstrating proposed watts are less than or equal to allowed watts.	☐Complies ☐Does Not ☐Not Observable ☐Not Applicable	*See the Exterior Lighting fixture schedule for values.*

1 High Impact (Tier 1) | 2 Medium Impact (Tier 2) | 3 Low Impact (Tier 3)

Section # & Req.ID	Final Inspection	Complies?	Comments/Assumptions
C406.4 [FI54][1]	Enhanced digital lighting controls efficiency package: Interior lighting has following enhanced lighting controls in accordance with Section C405.2.2: Luminaires capable of continuous dimming and being addressed individually, <= 8 luminaires controlled in combination in a daylight zone, digital control system for fixtures, "Sequence of Operations" documentation, and functional testing per Section C408.	☐Complies ☐Does Not ☐Not Observable ☐Not Applicable	Requirement will be met.
C408.1.1 [FI57][1]	Building operations and maintenance documents will be provided to the owner. Documents will cover manufacturers' information, specifications, programming procedures and means of illustrating to owner how building, equipment and systems are intended to be installed, maintained, and operated.	☐Complies ☐Does Not ☐Not Observable ☐Not Applicable	Requirement will be met.
C408.2.1 [FI28][1]	Commissioning plan developed by registered design professional or approved agency.	☐Complies ☐Does Not ☐Not Observable ☐Not Applicable	Requirement will be met.
C408.2.3.1 [FI31][1]	HVAC equipment has been tested to ensure proper operation.	☐Complies ☐Does Not ☐Not Observable ☐Not Applicable	Requirement will be met.
C408.2.3.2 [FI10][1]	HVAC control systems have been tested to ensure proper operation, calibration and adjustment of controls.	☐Complies ☐Does Not ☐Not Observable ☐Not Applicable	Requirement will be met.
C408.2.3.3 [FI32][1]	Economizers have been tested to ensure proper operation.	☐Complies ☐Does Not ☐Not Observable ☐Not Applicable	Requirement will be met.
C408.2.4 [FI29][1]	Preliminary commissioning report completed and certified by registered design professional or approved agency.	☐Complies ☐Does Not ☐Not Observable ☐Not Applicable	Requirement will be met.
C408.2.5.1 [FI7][3]	Furnished HVAC as-built drawings submitted within 90 days of system acceptance.	☐Complies ☐Does Not ☐Not Observable ☐Not Applicable	Requirement will be met.
C408.2.5.1 [FI16][3]	Furnished as-built drawings for electric power systems within 90 days of system acceptance.	☐Complies ☐Does Not ☐Not Observable ☐Not Applicable	
C408.2.5.3 [FI43][1]	An air and/or hydronic system balancing report is provided for HVAC systems.	☐Complies ☐Does Not ☐Not Observable ☐Not Applicable	Requirement will be met.

1 High Impact (Tier 1) | 2 Medium Impact (Tier 2) | 3 Low Impact (Tier 3)

H2M architects + engineers
538 Broad Hollow Road, 4th Floor East
Melville, NY 11747
631.756.8000 • www.h2m.com

CONSULTANTS:

MARK	DATE	DESCRIPTION

REGISTERED ARCHITECT ROBERT BEE 032389 STATE OF NEW YORK

*ALTERATION OF THIS DOCUMENT EXCEPT BY A LICENSED PROFESSIONAL IS ILLEGAL.

DESIGNED BY:	DRAWN BY:	CHECKED BY:	REVIEWED BY:
KEM	JHG		

PROJECT No:	DATE:	SCALE:
VGFD2001	JULY 2022	AS SHOWN

CLIENT

VAILS GATE FIRE DISTRICT

New Storage Building (Phase I)
New Fire Station (Phase II)

872 Blooming Grove Turnpike
New Windsor, NY 12553

CONTRACT

CONTRACT G
GENERAL CONSTRUCTION

STATUS

FINAL BID DOCUMENT

SHEET TITLE

ARCHITECTURE
ENERGY COMPLIANCE
NEW FIRE STATION
PHASE 2

DRAWING No.

A2 015.00

C:\Users\jgazman\Documents\VGFD2001_Central21_A_jgazman.rvt
7/18/2022 8:17:29 AM

Section # & Req.ID	Final Inspection	Complies?	Comments/Assumptions
C408.2.5.4 [FI30][1]	Final commissioning report due to building owner within 90 days of receipt of certificate of occupancy.	☐Complies ☐Does Not ☐Not Observable ☐Not Applicable	Requirement will be met.
C408.3 [FI33][1]	Lighting systems have been tested to ensure proper calibration, adjustment, programming, and operation.	☐Complies ☐Does Not ☐Not Observable ☐Not Applicable	

Additional Comments/Assumptions:

1	High Impact (Tier 1)	2	Medium Impact (Tier 2)	3	Low Impact (Tier 3)

H2M architects + engineers
538 Broad Hollow Road, 4th Floor East
Melville, NY 11747
631.756.8000 • www.h2m.com

CONSULTANTS:

MARK	DATE	DESCRIPTION

REGISTERED ARCHITECT ROBERT BEE 102389 STATE OF NEW YORK

*ALTERATION OF THIS DOCUMENT EXCEPT BY A LICENSED PROFESSIONAL IS ILLEGAL.

DESIGNED BY:	DRAWN BY:	CHECKED BY:	REVIEWED BY:
KEM	JHG		

PROJECT No:	DATE:	SCALE:
VGFD2001	JULY 2022	AS SHOWN

CLIENT

VAILS GATE FIRE DISTRICT

New Storage Building (Phase I)
New Fire Station (Phase II)

872 Blooming Grove Turnpike
New Windsor, NY 12553

CONTRACT

CONTRACT G
GENERAL CONSTRUCTION

STATUS

FINAL BID DOCUMENT

SHEET TITLE

ARCHITECTURE
ENERGY COMPLIANCE
NEW FIRE STATION
PHASE 2

DRAWING No.

A2 016.00

7/18/2022 8:17:30 AM C:\Users\jgazman\Documents\VGFD2001_Central21_A_jgazman.rvt

GENERAL NOTES

1. ALL INTERIOR WALL AND CEILING FINISHES MUST MEET OR EXCEED THE REQUIREMENTS STATED IN TABLE 803.13 OF THE 2020 BUILDING CODE OF NEW YORK STATE (BCNYS).
2. ALL GLAZING IN DOORS, FIXED SIDE PANELS ADJOINING DOORS, INTERIOR PARTITIONS WHERE GLAZING EXTENDS TO WITHIN 1'-6" OF FINISHED FLOOR AND GLASS PANELS GREATER THAN 50 SQ. FT. TO BE FULLY TEMPERED SAFETY GLASS PER 2020 BCNYS CHAPTER 24.
3. THE MINIMUM CORRIDOR WIDTH SHALL NOT BE LESS THAN 44", PER 2020 BCNYS TABLE 1020.2.
4. TWO (2) EXITS FROM THE BUILDING ARE REQUIRED PER THE OCCUPANT LOAD, PER 2020 BCNYS TABLE 1006.3.2.
5. ONE (1) ACCESSIBLE ENTRANCE IS REQUIRED INTO THE BUILDING FROM THE EXTERIOR PER 2020 BCNYS SECTION 1105.1. (60% OF ALL PUBLIC ENTRANCES)
6. TWO (2) ACCESSIBLE PARKING SPACES MUST BE PROVIDED PER 2020 BCNYS TABLE 1106.1. SEE CIVIL DRAWINGS FOR LOCATIONS.
7. MAXIMUM ALLOWABLE TRAVEL DISTANCE SHALL NOT EXCEED 250'-0" FOR OCCUPANCY TYPE "A", 300'-0" FOR OCCUPANCY TYPE "B", AND 400'-0" FOR OCCUPANCY TYPE "S-2", IN ACCORDANCE WITH 2020 BCNYS, SECTION 1017, TABLE 1017.2 (FULLY SPRINKLED). (NON-SEPARATED MIXED USE BUILDING, THEREFORE 250'-0" GOVERNS AS MOST RESTRICTIVE.)
8. FACILITY TO BE EQUIPPED THROUGHOUT WITH A FULL NFPA 13 FIRE SPRINKLER SYSTEM THAT COMPLIES WITH SECTION 903 OF THE 2020 BCNYS. REFER TO 'FP' DRAWINGS FOR ADDITIONAL INFORMATION.
9. FACILITY TO BE EQUIPPED THROUGHOUT WITH A FULLY-ADDRESSIBLE NFPA 13 FIRE ALARM AND DETECTION SYSTEM. REFER TO 'FA' DRAWINGS FOR ADDITIONAL INFORMATION.
10. SQUARE FOOTAGES INDICATED BY ROOM ON CODE PLANS ON SHEETS G 101 AND G 102. REFER TO 2020 BCNYS TABLE 1004.5 FOR OCCUPANCY VALUES.
11. PORTABLE FIRE EXTINGUISHERS SHALL BE PROVIDED AS INDICATED IN SECTION 906 OF THE 2020 BCNYS AND TABLE 906.1 OF THE NYSFC. PORTABLE FIRE EXTINGUISHERS SHALL ALSO BE SELECTED AND INSTALLED IN ACCORDANCE WITH NFPA 10. SEE CODE COMPLIANCE PLANS ON G 101 AND G102 FOR QUANTITIES AND LOCATIONS OF EXTINGUISHERS.

BUILDING CODE OF NEW YORK STATE

(2020 BCNYS, CHAPTERS 5)

	ALLOWED *	PROPOSED	COMMENTS
BUILDING OCCUPANCY	A-3 / B / S-2	A-3 / B / S-2	SEE NOTES 2 & 3.
CONSTRUCTION CLASSIFICATION	IIB	IIB	-
HEIGHT (STORIES)	3	2	-
HEIGHT (FEET)	75'-0"	43'-10"	-
FIRE AREA (SF)	28,500	21,979	SEE NOTES 1 - 7

NOTES:
1. AS PER NYS BUILDING CODE AND NYS BULLETIN DATED OCTOBER 31, 2017, THIS BUILDING SHALL BE CONSIDERED A MIXED USE NON-SEPARATED BUILDING CONSISTING OF GROUPS 'S-2', 'B', AND 'A-3' THE MOST RESTRICTIVE. A-3, SHALL APPLY WHEN CALCULATING PERMITTED FIRE AREAS AND BUILDING HEIGHTS.
2. CODE ANALYSIS PERFORMED USING 2020 BUILDING CODE OF NEW YORK STATE.
3. MODEL BUILDING CODE, WITH APPLICABLE STATE AMENDMENTS, (HEREAFTER REFERENCED AS EITHER '2020 BCNYS' OR THE 'NYS BUILDING CODE'; OTHER PERTINENT APPLICABLE CODES INCLUDE, BUT ARE NOT LIMITED TO, ENERGY CONSERVATION CONSTRUCTION CODE (ECCCNYS) AND 2020 FIRE CODE (FC).
4. * = BASED ON MOST RESTRICTIVE.
5. ALLOWABLE BUILDING AREA AND HEIGHT HAS BEEN CALCULATED WITH THE INCLUSION OF AN AUTOMATIC SPRINKLER SYSTEM INSTALLED IN ACCORDANCE WITH SECTION 903 OF THE 2020 BCNYS.
6. AS PER 2020 BCNYS SECTION 505.2, THE MEZZANINE AREA HAS BEEN CALCULATED AS PART OF THE STORY BELOW.
7. BUILDING IS TO BE FULLY SPRINKLERED.

FIRE-RESISTANCE RATING REQUIREMENTS FOR BUILDING ELEMENTS

(2020 BCNYS, TABLE 601 & 602)

BUILDING OCCUPANCY CLASSIFICATION: A-3, B, S-2
CONSTRUCTION CLASSIFICATION: IIB

BUILDING ELEMENT	HOURS	COMMENTS
STRUCTURAL FRAME	0	-
EXTERIOR BEARING WALLS	0	SEE NOTE 2.
EXTERIOR NON-BEARING WALLS	0	-
INTERIOR BEARING WALLS	0	-
INTERIOR NON-BEARING WALLS	0	SEE NOTE 2.
FLOOR CONSTRUCTION	0	-
ROOF CONSTRUCTION	0	-

NOTES:
1. AS PER 2020 BCNYS, TABLE 602, AND AS INDICATED ON PLANS.
2. AS PER 2020 BCNYS TABLE 602, ALL TYPES OF CONSTRUCTION FIRE SEPARATION DISTANCE $10 \leq X \leq 30$, FIRE RESISTANCE RATING IS 0.
3. SEE DRAWING A 001 FOR PARTITION TYPES
4. MOST RESTRICTIVE GOVERNS.

ENERGY CONSERVATION CONSTRUCTION CODE OF NYS

COUNTY: NEW WINDSOR | ZONE: 5A (2020 ECCCNYS TABLE C402.1.3 AND C402.4)

BUILDING ELEMENT	REQUIRED	PROPOSED
UNHEATED SLAB	R-10 FOR 24" BELOW	R-10 FOR 24" BELOW
HEATED SLAB	R-15 FOR 36" BELOW + R-5 FULL SLAB	R-15 FOR 36" BELOW + R-10 FULL SLAB
ROOF (INSULATION ENTIRELY ABOVE ROOF DECK)	R-30ci	R-30ci
ROOF (ATTIC)	R-38	R-38
ABOVE GRADE WALL (METAL FRAMED)	R-13 + R-7.5ci	R-19 + R15ci
ABOVE GRADE WALL (MASS)	R-11.4ci	R-15ci
NON-SWINGING OPAQUE DOORS	R-4.75	U-0.16
ENTRANCE DOORS	U-0.77	U-0.70
FIXED FENESTRATION	U-0.38	U-0.28
OPERABLE FENESTRATION	U-0.45	U-0.26

ENERGY CODE STATEMENT

(2020 ECCCNYS, SECTION C103.2.2)

TO THE BEST OF MY KNOWLEDGE, BELIEF, AND PROFESSIONAL JUDGEMENT, THE DRAWINGS AND SPECIFICATIONS WHICH COMPRISE THE CONSTRUCTION DOCUMENTS FOR THE PROJECT ARE IN COMPLIANCE WITH THE LATEST EDITION OF THE ENEGRY CONSERVATION CONSTRUCTION CODE OF NEW YORK STATE.

APPLICABLE CODES

THE FOLLOWING ARE ADOPTED REFERENCES AS AMENDED:
- 2020 BUILDING CODE OF NEW YORK STATE, 1ST PRINTING
- 2020 FIRE CODE OF NEW YORK STATE, 1ST PRINTING
- 2020 PLUMBING CODE OF NEW YORK STATE, 1ST PRINTING
- 2020 FUEL GAS CODE OF NEW YORK STATE, 1ST PRINTING
- 2020 MECHANICAL CODE OF NEW YORK STATE, 1ST PRINTING
- 2020 ENERGY CONSERVATION CODE OF NEW YORK STATE, 1ST PRINTING
- ASHRAE 90.1.2019 (OCTOBER 2019 PRINTING)
- ICC/ANSI A117.1 - 2019 ACCESSIBLE AND USABLE BUILDINHS AND FACILITIES.

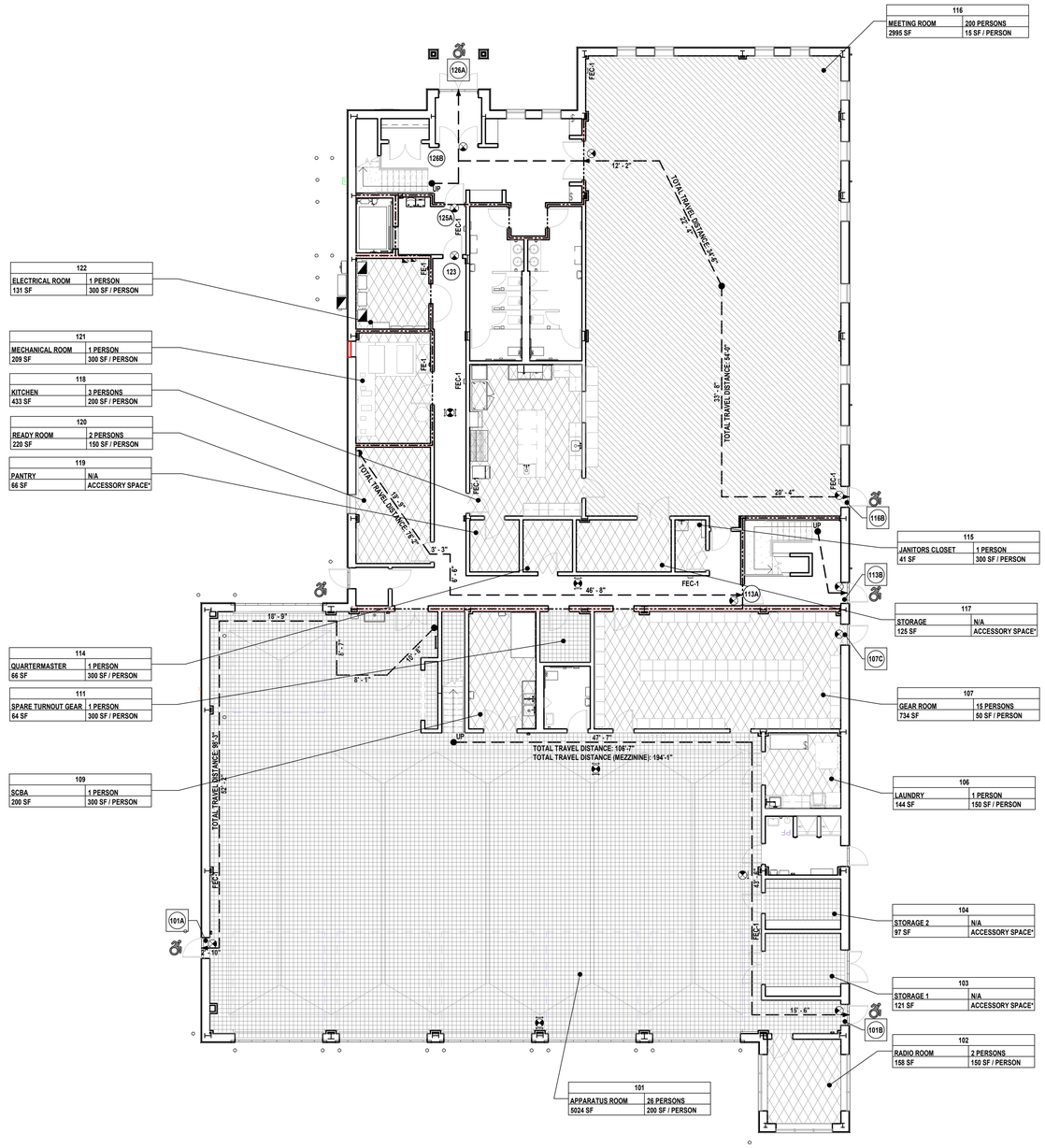

1 First Floor Egress Plan
SCALE: 3/32" = 1'-0"

PROJECT NORTH

EGRESS LEGEND

OCCUPANCY — 101 — ROOM NUMBER
CONFERENCE ROOM — 1 PERSON — NUMBER OF PERSONS
AREA (sf) — 150 SF — 100 SF / Occ. — SQUARE FOOT/PERSON
LENGTH OF TRAVEL — XX'-XX" — EXIT DESTINATION
REMOTE POINT — PATH OF TRAVEL

101	INDICATES EXIT DOOR	101	INDICATES EXIT ACCESS DOOR
	INDICATES ADA ENTRANCE / EXIT		1 HOUR MIN. FIRE RATED WALL. 3/4 HOUR MIN. FIRE RATED OPENING PROTECTIVES
	INDICATES GROSS AREA OF ASSEMBLY (A-3) SPACES		INDICATES EMERGENCY EXIT
	INDICATES GROSS AREA OF STORAGE (S-2) SPACES	FE - #	INDICATES FIRE EXTINGUISHER AND TYPE #
	INDICATES GROSS AREA OF BUSINESS (B) SPACES	FEC - #	INDICATES FIRE EXTINGUISHER (IN CABINET SEMI - RECESSED) AND TYPE #

MINIMUM NUMBER OF EXITS PER OCCUPIED SPACE

(2020 BCNYS, TABLE 1006.2.1 AND TABLE 1006.3.2)

	ROOM #	ROOM NAME	OCCUPANT LOAD	MINIMUM REQ'D # OF EXITS	# OF EXITS PROVIDED
FIRST FLOOR (WITH MEZZANINE)	101	APPARATUS ROOM	26	1	2
	102	RADIO ROOM	2	1	1
	106	LAUNDRY	1	1	1
	107	GEAR ROOM	15	1	4
	109	SCBA	1	1	1
	111	SPARE TURNOUT GEAR	1	1	1
	114	QUARTERMASTER	1	1	1
	116	MEETING ROOM	200	2	3
	118	KITCHEN	3	1	1
	120	READY ROOM	2	1	1
	121	MECHANICAL ROOM	1	1	1
	122	ELECTRICAL ROOM	1	1	1
	221	MEZZANINE	4	1	2

NOTES:
1. BASED ON BCNYS TABLE 1004.5
2. ALL ROOMS DESIGNATED WITH AN ASTERICK ARE ACCESSORY SPACES AS PER 2020 BCNYS SECTION 1004.2.1.

MINIMUM NUMBER OF EXITS PER OCCUPIED LOAD

(2020 BCNYS, TABLE 1006.3.2)

LEVEL	FLOOR AREA (SF)	OCCUPANT LOAD	MIN. # OF EXITS OR EXIT ACCESS REQ'D	# OF EXITS PROVIDED
FIRST FLOOR (WITH MEZZANINE)	15,096	258	2	6
SECOND FLOOR	6,883	129	2	2

CAPACITY OF EXIT DOORS

(2020 BCNYS, SECTION 1005.3.1 , 1005.3.2 AND SECTION 1010.1.1)

DOOR #	MINIMUM WIDTH	ACTUAL WIDTH	MAXIMUM # OF PERSONS ALLOWED	MAXIMUM # OF PERSONS PROPOSED
101A	32" CLEAR	36" DOOR	36 / .15 = 240	17
101B	32" CLEAR	36" DOOR	36 / .15 = 240	17
107C	32" CLEAR	36" DOOR	36 / .15 = 240	15
113B	32" CLEAR	36" DOOR	36 / .20 = 240	71
116B	32" CLEAR	36" DOOR	36 / .15 = 240	100
126A	32" CLEAR	72" DOOR	72 / .15 = 480	168

NOTES:
1. CLEAR WIDTH MEASURE WITH DOORS OPEN AT 90 DEGREES.
2. PROVIDE A CLEAR WDITH OF 32" MINIMUM FOR EGRESS AT SINGLE DOORS SIZED AT 36".
3. PROVIDE A CLEAR WIDTH OF 68" MINIMUM FOR EGRESS AT DOUBLE DOORS SIZED AT 72".
4. MAXIMUM NUMBER OF PERSONS/OCCUPANTS ALLOWED BASED ON BCNYS SECTION 1005.3.2, EXCEPTION 1.

CAPACITY OF EXIT ACCESS DOORS

(2020 BCNYS, SECTION 1005.3.1 , 1005.3.2 AND SECTION 1010.1.1)

DOOR #	MINIMUM WIDTH	ACTUAL WIDTH	MAXIMUM # OF PERSONS ALLOWED	MAXIMUM # OF PERSONS PROPOSED
113A	32" CLEAR	36" DOOR	36 / .15 = 240	6
125	32" CLEAR	36" DOOR	36 / .15 = 240	3
126B	32" CLEAR	72" DOOR	72 / .15 = 480	168

NOTES:
1. CLEAR WIDTH MEASURE WITH DOORS OPEN AT 90 DEGREES.
2. PROVIDE A CLEAR WDITH OF 32" MINIMUM FOR EGRESS AT SINGLE DOORS SIZED AT 36".
3. PROVIDE A CLEAR WIDTH OF 68" MINIMUM FOR EGRESS AT DOUBLE DOORS SIZED AT 72".
4. * = ONLY 1 ACTIVE LEAF
5. MAXIMUM NUMBER OF PERSONS/OCCUPANTS ALLOWED BASED ON BCNYS SECTION 1005.3.2, EXCEPTION 1

EXIT ACCESS TRAVEL DISTANCE

(2020 BCNYS, TABLE 1017.2)

OCCUPANCY	MAXIMUM DISTANCE ALLOWED (SPRINKLERED)	MAXIMUM DISTANCE PROVIDED (SPRINKLERED)
ASSEMBLY (A-3)	250'-0"	SEE EGRESS PLANS ON G 101 & G 102

H2M architects + engineers
538 Broad Hollow Road, 4th Floor East
Melville, NY 11747
631.756.8000 • www.h2m.com

CONSULTANTS:

MARK	DATE	DESCRIPTION

REGISTERED ARCHITECT ROBERT BEE 032389 STATE OF NEW YORK

*ALTERATION OF THIS DOCUMENT EXCEPT BY A LICENSED PROFESSIONAL IS ILLEGAL.

DESIGNED BY:	DRAWN BY:	CHECKED BY:	REVIEWED BY:
KEM	JHG		

PROJECT No:	DATE:	SCALE:
VGFD2001	JULY 2022	AS SHOWN

CLIENT
VAILS GATE FIRE DISTRICT

New Storage Building (Phase I)
New Fire Station (Phase II)

872 Blooming Grove Turnpike
New Windsor, NY 12553

CONTRACT
CONTRACT G
GENERAL CONSTRUCTION

STATUS
FINAL BID DOCUMENT

SHEET TITLE
ARCHITECTURE
FIRST FLOOR EGRESS PLAN
NEW FIRE STATION
PHASE 2

DRAWING No.
A2 020.00

C:\Users\jguzman\Documents\VGFD2001_Central21_A_jguzman.rvt
7/18/2022 8:17:36 AM

PLUMBING FIXTURE REQUIREMENTS

(2020 PCNYS, TABLE 403.1)

SPACE		WATER CLOSETS				LAVATORIES			BATHTUBS/SHOWERS		DRINKING FOUNTAIN		OTHER	
USE	LOAD	RATIO	MALE	RATIO	FEMALE	RATIO	MALE	FEMALE	RATIO	REQUIRED	RATIO	REQUIRED	REQUIRED	PROVIDED
ASSEMBLY 'A-3'	200	1 PER 125	0.8	1 PER 65	1.54	1 PER 200	0.5	0.5	N/A		1 PER 500	0.4	1 SERVICE SINK	SEE NOTE 2
BUSINESS 'B'	138	1 PER 25 FOR THE FIRST 50, 1 PER 50 FOR THE REMAINDER EXCEEDING 50	2.38	1 PER 25 FOR THE FIRST 50, 1 PER 50 FOR THE REMAINDER EXCEEDING 50	2.38	1 PER 40 FOR THE FIRST 1,520, 1 PER 80 FOR THE REMAINDER EXCEEDING 1,520	1.73	1.73	N/A		1 PER 100	1.38	1 SERVICE SINK	2
STORAGE 'S-2'	50	1 PER 100	0.5	1 PER 100	0.5	1 PER 100	0.25	0.25	N/A		1 PER 1000	0.05	1 SERVICE SINK	1
SUB-TOTAL	388		3.68		4.42		2.48	2.48	N/A			1.83		
TOTAL REQUIRED			4		5		3	3	N/A	0		2		3
TOTAL PROVIDED			5		5		3	3	N/A	4		3		3

NOTES:
1. 'ASSEMBLY' USE HAS BEEN UTILIZED ONLY AS A DESIGNATION OF FUNCTION FOR THE MEETING ROOM. PLUMBING FIXTURE COUNTS BASED ON ACTUAL/FUNCTIONAL USE, NOT BUILDING CLASSIFICATION.
2. THE 2020 PCNYS REQUIRES ONLY ONE SERVICE SINK PER BUILDING IF ALL OCCUPANCIES HAVE ACCESS TO THE SERVICE SINK AT ALL TIMES. THIS BUILDING IS EQUIPPED WITH 3 SERVICE SINKS.
3. AS PER SECTION 403.3.3 OF THE 2020 BCNYS, TOILET FACILITIES ARE REQUIRED TO BE LOCATED WITHIN 500 FEET AND ONE STORY ABOVE OR BELOW THE SPACE THAT REQUIRES THEM. FULL COMPLIANCE OF THIS REQUIREMENT HAS BEEN PROVIDED.
4. THIS FACILITY IS EQUIPPED WITH ONE (1) EMERGENCY EYEWASH STATION AND TWO (2) EMERGENCY SHOWERS.
5. ONE ADDITIONAL SINGLE OCCUPANT UNISEX TOILET ROOM HAS BEEN PROVIDED (TOILET ROOM 108). ONE ADDITIONAL WATER CLOSET AND LAVATORY IS PROVIDED IN THE ROOM. THESE FIXTURES ARE IN ADDITION TO THE COUNT SHOWN IN THE ABOVE TABLE.

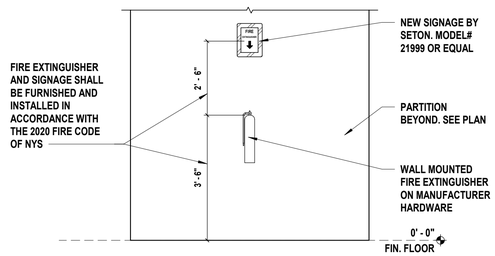

NOTE:
FIRE EXTINGUISHERS SHALL BE INSTALLED PER FCNYS 906 AND NFPA 10. MAXIMUM TRAVEL DISTANCE OF TRAVEL TO AN EXTINGUISHER SHALL BE 75 FEET, WITH A MINIMUM OF ONE FIRE EXTINGUISHER PER 11,250 SQUARE FEET OF FLOOR AREA.

2 Wall Mounted Fire Extinguisher
SCALE:N.T.S

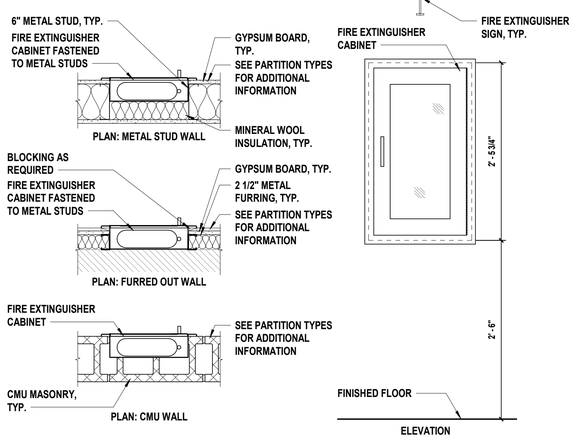

3 Recessed Fire Extinguisher Detail
SCALE: 1" = 1'-0"

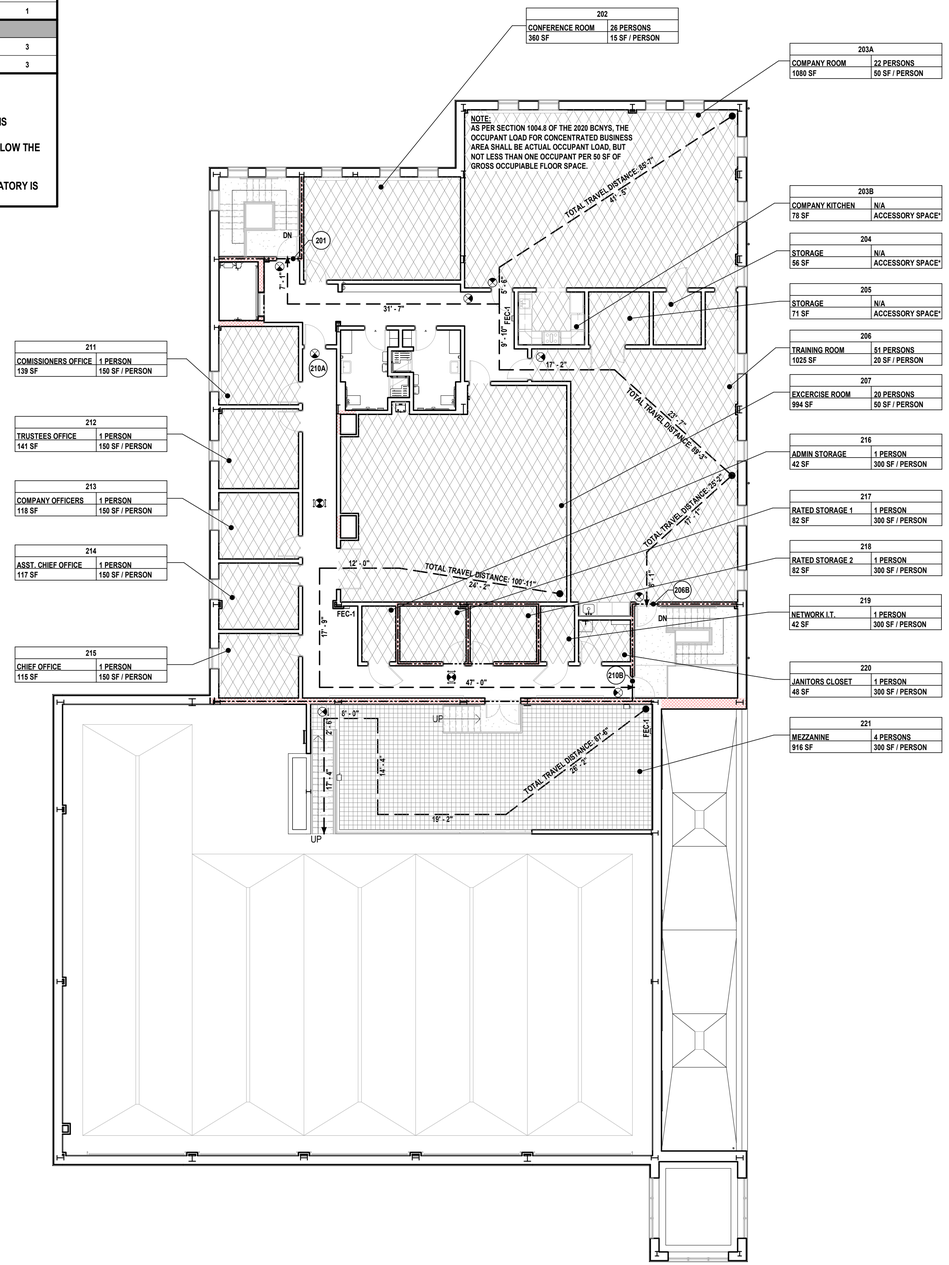

1 Second Floor Egress Plan
SCALE: 3/32" = 1'-0"

PROJECT NORTH

EGRESS LEGEND

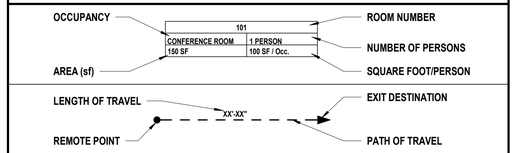

101	INDICATES EXIT DOOR	101	INDICATES EXIT ACCESS DOOR
	INDICATES ADA ENTRANCE / EXIT		1 HOUR MIN. FIRE RATED WALL. 3/4 HOUR MIN. FIRE RATED OPENING PROTECTIVES
	INDICATES GROSS AREA OF ASSEMBLY (A-3) SPACES		INDICATES EMERGENCY EXIT
	INDICATES GROSS AREA OF STORAGE (S-2) SPACES	FE - #	INDICATES FIRE EXTINGUISHER AND TYPE #
	INDICATES GROSS AREA OF BUSINESS (B) SPACES	FEC - #	INDICATES FIRE EXTINGUISHER (IN CABINET SEMI - RECESSED) AND TYPE #

MINIMUM NUMBER OF EXITS PER OCCUPIED SPACE

(2020 BCNYS, TABLE 1006.2.1 AND TABLE 1006.3.2)

	ROOM #	ROOM NAME	OCCUPANT LOAD	MINIMUM REQ'D # OF EXITS	# OF EXITS PROVIDED
SECOND FLOOR	202	CONFERENCE ROOM	26	1	1
	203A	COMPANY ROOM	22	1	1
	206	TRAINING ROOM	51	2	2
	207	EXCERCISE ROOM	20	1	2
	211	COMISSIONERS OFFICE	1	1	1
	212	TRUSTEES OFFICE	1	1	1
	213	COMPANY OFFICERS	1	1	1
	214	ASSISTANT CHIEF OFFICE	1	1	1
	215	CHIEF OFFICE	1	1	1
	216	ADMIN STORAGE	1	1	1
	217	RATED STORAGE 1	1	1	1
	218	RATED STORAGE 2	1	1	1
	219	NETWORK I.T.	1	1	1
	220	JANITORS CLOSET	1	1	1

NOTES:
1. BASED ON BCNYS TABLE 1004.5
2. ALL ROOMS DESIGNATED WITH AN ASTERICK ARE ACCESSORY SPACES AS PER 2020 BCNYS SECTION 1004.2.1.

CAPACITY OF EXIT ACCESS DOORS

(2020 BCNYS, SECTION 1005.3.1 , 1005.3.2 AND SECTION 1010.1.1)

DOOR #	MINIMUM WIDTH	ACTUAL WIDTH	MAXIMUM # OF PERSONS ALLOWED	MAXIMUM # OF PERSONS PROPOSED
201	32" CLEAR	36" DOOR	36 / .15 = 240	93
210A	32" CLEAR	36" DOOR	36 / .15 = 240	10
206B	32" CLEAR	36" DOOR	36 / .15 = 240	26
210B	32" CLEAR	36" DOOR	36 / .20 = 180	10

NOTES:
1. CLEAR WIDTH MEASURE WITH DOORS OPEN AT 90 DEGREES.
2. PROVIDE A CLEAR WDITH OF 32" MINIMUM FOR EGRESS AT SINGLE DOORS SIZED AT 36".
3. PROVIDE A CLEAR WIDTH OF 68" MINIMUM FOR EGRESS AT DOUBLE DOORS SIZED AT 72".
4. MAXIMUM NUMBER OF PERSONS/OCCUPANTS ALLOWED BASED ON BCNYS SECTION 1005.3.2, EXCEPTION 1.

H2M architects + engineers
538 Broad Hollow Road, 4th Floor East
Melville, NY 11747
631.756.8000 • www.h2m.com

CONSULTANTS:

MARK	DATE	DESCRIPTION

REGISTERED ARCHITECT ROBERT BEE 032389 STATE OF NEW YORK

*ALTERATION OF THIS DOCUMENT EXCEPT BY A LICENSED PROFESSIONAL IS ILLEGAL

DESIGNED BY:	DRAWN BY:	CHECKED BY:	REVIEWED BY:
KEM	JHG		
PROJECT No: VGFD2001	DATE: JULY 2022	SCALE: AS SHOWN	

CLIENT
VAILS GATE FIRE DISTRICT

New Storage Building (Phase I)
New Fire Station (Phase II)

872 Blooming Grove Turnpike
New Windsor, NY 12553

CONTRACT
CONTRACT G
GENERAL CONSTRUCTION

STATUS
FINAL BID DOCUMENT

SHEET TITLE
ARCHITECTURE
SECOND FLOOR EGRESS PLAN
NEW FIRE STATION
PHASE 2

DRAWING No.
A2 021.00

C:\Users\jguzman\Documents\VGFD2001_Central21_A_jguzman.rvt

7/18/2022 8:17:41 AM

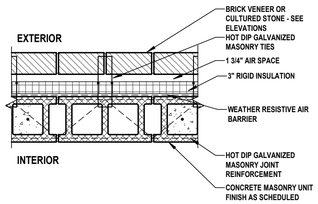

WALL TYPE	OVERALL DIMENSIONS	CMU SIZE	FIRE RATING	UL No.	STC RATING	COMMENTS
01	1'-4"	7 5/8"	-	-	-	-

01 CMU Veneer
Exterior Partition — H2M Ref # CE-002

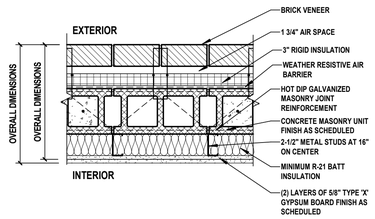

WALL TYPE	OVERALL DIMENSIONS	CMU SIZE	FIRE RATING	UL No.	STC RATING	COMMENTS
02A	1'-7 1/8"	7 5/8"	-	-	-	-
02B	1'-7 3/4"	7 5/8"	1 HR	U938	-	-

02 CMU Veneer
Exterior Partition — H2M Ref # CE-002

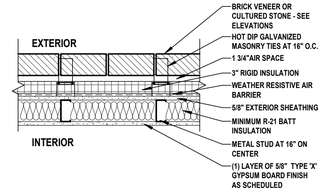

WALL TYPE	OVERALL DIMENSIONS	STUD SIZE	FIRE RATING	UL No.	STC RATING	COMMENTS
03	1'-3 5/8"	6"	-	-	-	-

03 Masonry Veneer
Exterior Partition — H2M Ref # ME-026

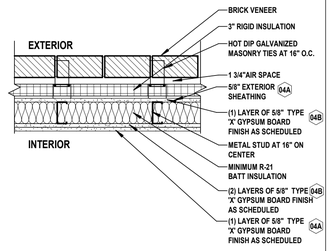

WALL TYPE	OVERALL DIMENSIONS	STUD SIZE	FIRE RATING	UL No.	STC RATING	COMMENTS
04A	1'-3-5/8"	6"	-	-	-	-
04B	1'-4 1/4"	6"	1 HR	W429	-	-

04 Brick Veneer at Gable Ends
Exterior Partition — H2M Ref # ME-026

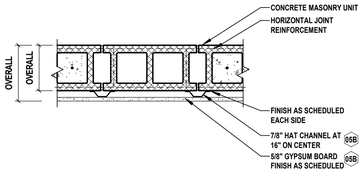

WALL TYPE	OVERALL DIMENSIONS	CMU SIZE	FIRE RATING	UL No.	STC RATING	COMMENTS
05A	7 5/8"	7 5/8"	-	-	-	-
05B	9 1/8"	7 5/8"	1 HR	U935	-	-

05 CMU Partition
Interior Partition — H2M Ref # CI-101

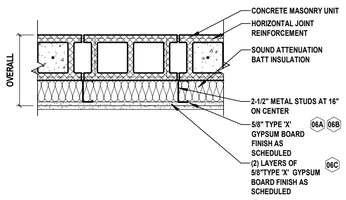

WALL TYPE	OVERALL DIMENSIONS	CMU SIZE	FIRE RATING	UL No.	STC RATING	COMMENTS
06A	10 3/4"	7 5/8"	-	-	-	-
06B	10 3/4"	7 5/8"	1 HR	U935	-	-
06C	11 3/8"	7 5/8"	1 HR	U935	-	-

06 CMU w/ Metal Stud
Interior Partition — H2M Ref # CI-102

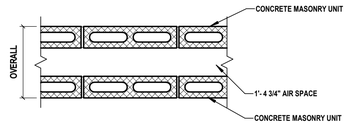

WALL TYPE	OVERALL DIMENSIONS	CMU SIZE	FIRE RATING	UL No.	STC RATING	COMMENTS
07	1'-3 1/4"	3 5/8"	-	-	-	-

07 CMU Chase Wall
Interior Partition — H2M Ref # CI-108

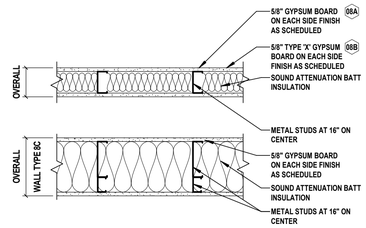

WALL TYPE	OVERALL DIMENSIONS	STUD SIZE	FIRE RATING	UL No.	STC RATING	COMMENTS
08A	7 1/4"	6"	-	-	-	-
08B	7 1/4"	6"	1 HR	U423	-	-
08C	11 1/4"	8" & 2 1/2"	-	-	-	-

08 Metal Stud Partition
Interior Partition — H2M Ref # MI-131

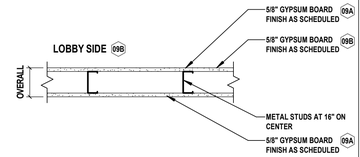

WALL TYPE	OVERALL DIMENSIONS	STUD SIZE	FIRE RATING	UL No.	STC RATING	COMMENTS
09A	7 1/4"	6"	-	-	-	-
09B	6 5/8"	6"	-	-	-	-

09 Metal Stud Partition
Interior Partition — H2M Ref # MI-131

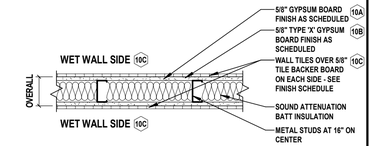

WALL TYPE	OVERALL DIMENSIONS	STUD SIZE	FIRE RATING	UL No.	STC RATING	COMMENTS
10A	7 1/4"	6"	-	-	-	OVERALL DIMENSION EXCLUDES TILE
10B	7 1/4"	6"	1 HR	U423	-	OVERALL DIMENSION EXCLUDES TILE
10C	7 1/4"	6"	-	-	-	OVERALL DIMENSION EXCLUDES TILE

10 Metal Stud Partition
Interior Partition — H2M Ref # MI-131

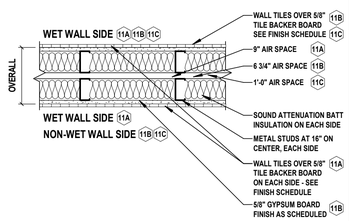

WALL TYPE	OVERALL DIMENSIONS	STUD SIZE	FIRE RATING	UL No.	STC RATING	COMMENTS
11A	1'-6 1/4"	(2) 2 1/2"	-	-	-	OVERALL DIMENSION EXCLUDES TILE
11B	1'-4"	4"	-	-	-	OVERALL DIMENSION EXCLUDES TILE
11C	1'-9 1/4"	4"	-	-	-	OVERALL DIMENSION EXCLUDES TILE

11 Metal Stud Double Wall
Interior Partition — H2M Ref # MI-139

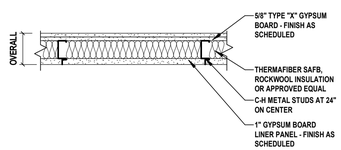

WALL TYPE	OVERALL DIMENSIONS	STUD SIZE	FIRE RATING	UL No.	STC RATING	COMMENTS
12	5 5/8"	2 1/2"	1 HR	U492	-	-

12 Metal Stud Shaft Wall
Interior Partition — H2M Ref # MI-135

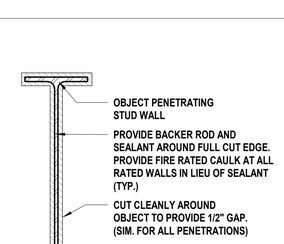

1 Typical Horizontal Penetrations at Walls
SCALE: 1 1/2" = 1'-0"

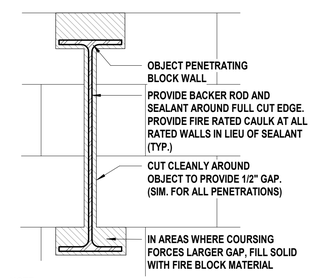

NOTE:
THESE DETAILS APPLY TO ALL PENETRATING ITEMS INCLUSING BEAMS, JOISTS, ANGLES, DUCTS, PIPES, CONDUIT, ETC. BEAMS ARE SHOWN FOR ILLUSTRATIVE PURPOSES ONLY.

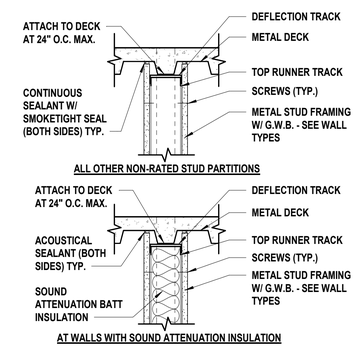

2 Typ. Top of Wall Stud to Underside of Deck
SCALE: 1 1/2" = 1'-0" Non-Rated Partitions

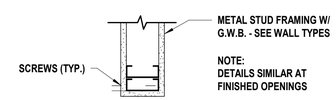

NOTE:
DETAILS SIMILAR AT FINISHED OPENINGS

3 Typical Stud Wall End Condition
SCALE: 1 1/2" = 1'-0"

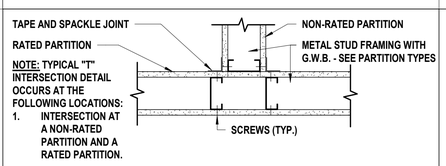

NOTE: TYPICAL "T" INTERSECTION DETAIL OCCURS AT THE FOLLOWING LOCATIONS:
1. INTERSECTION AT A NON-RATED PARTITION AND A RATED PARTITION.

5 Typical Stud Wall Intersection
SCALE: 1 1/2" = 1'-0"

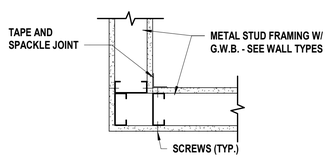

NOTE: TYPICAL CORNER DETAIL OCCURS AT THE FOLLOWING LOCATIONS:
1. INTERSECTION AT NON-RATED PARTITIONS.
2. INTERSECTION AT RATED PARTITIONS.

7 Typical Stud Wall Corner Detail
SCALE: 1 1/2" = 1'-0"

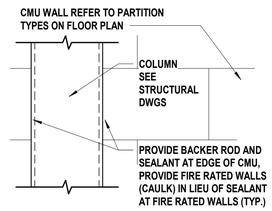

NOTE: USE JAMB BLOCK AT ENDS OF WALL THAT ARE EXPOSED

8 Typical CMU to Column Detail
SCALE: 1 1/2" = 1'-0"

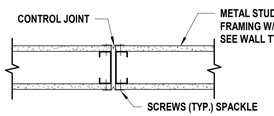

4 Typical Control Joint at Stud Wall
SCALE: 1 1/2" = 1'-0"

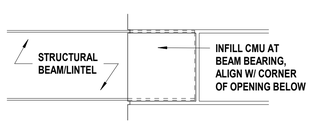

6 Typical Infill at Exposed Beam / Lintel
SCALE: 1 1/2" = 1'-0"

NOTE:
ALL FIRE WALLS OR ANY OTHER WALLS, FLOOR AND CEILINGS REQUIRED TO HAVE PROTECTED OPENINGS OR PENETRATIONS SHALL EFFECTIVELY AND PERMANENTLY BE IDENTIFIED WITH SIGNS OR STENCILING IN CONCEALED SPACES AS INDICATED IN SECTION 703.7 OF THE 2020 BUILDING CODE OF NEW YORK STATE.

NOTE:
ALL 5/8" EXTERIOR WALL SHEATHING TO BE TYPE 'X' GLASS-MAT GYPSUM SHEATHING AS PER SPECIFICATION SECTION 061600 2.05A

H2M architects + engineers
538 Broad Hollow Road, 4th Floor East
Melville, NY 11747
631.756.8000 • www.h2m.com

CONSULTANTS:

MARK	DATE	DESCRIPTION
2	12/22/2022	REVS. PER TOWN COMMENTS
3	02/02/2023	REVS. PER TOWN COMMENTS

REGISTERED ARCHITECT ROBERT BEE 032389 STATE OF NEW YORK

*ALTERATION OF THIS DOCUMENT EXCEPT BY A LICENSED PROFESSIONAL IS ILLEGAL.

DESIGNED BY:	DRAWN BY:	CHECKED BY:	REVIEWED BY:
KEM	JHG		

PROJECT No:	DATE:	SCALE:
VGFD2001	JULY 2022	AS SHOWN

CLIENT
VAILS GATE FIRE DISTRICT

New Storage Building (Phase I)
New Fire Station (Phase II)

872 Blooming Grove Turnpike
New Windsor, NY 12553

CONTRACT
CONTRACT G
GENERAL CONSTRUCTION

STATUS
FINAL BID DOCUMENT

SHEET TITLE
ARCHITECTURE
NEW FIRE STATION
PARTITION TYPES, PENETRATION AND CONNECTION DETAILS
PHASE 2

DRAWING No.
A2 030.03

C:\Users\jguzman\Documents\VGFD2001_Central21_A_jguzmanBK622.rvt
2/1/2023 11:49:18 AM

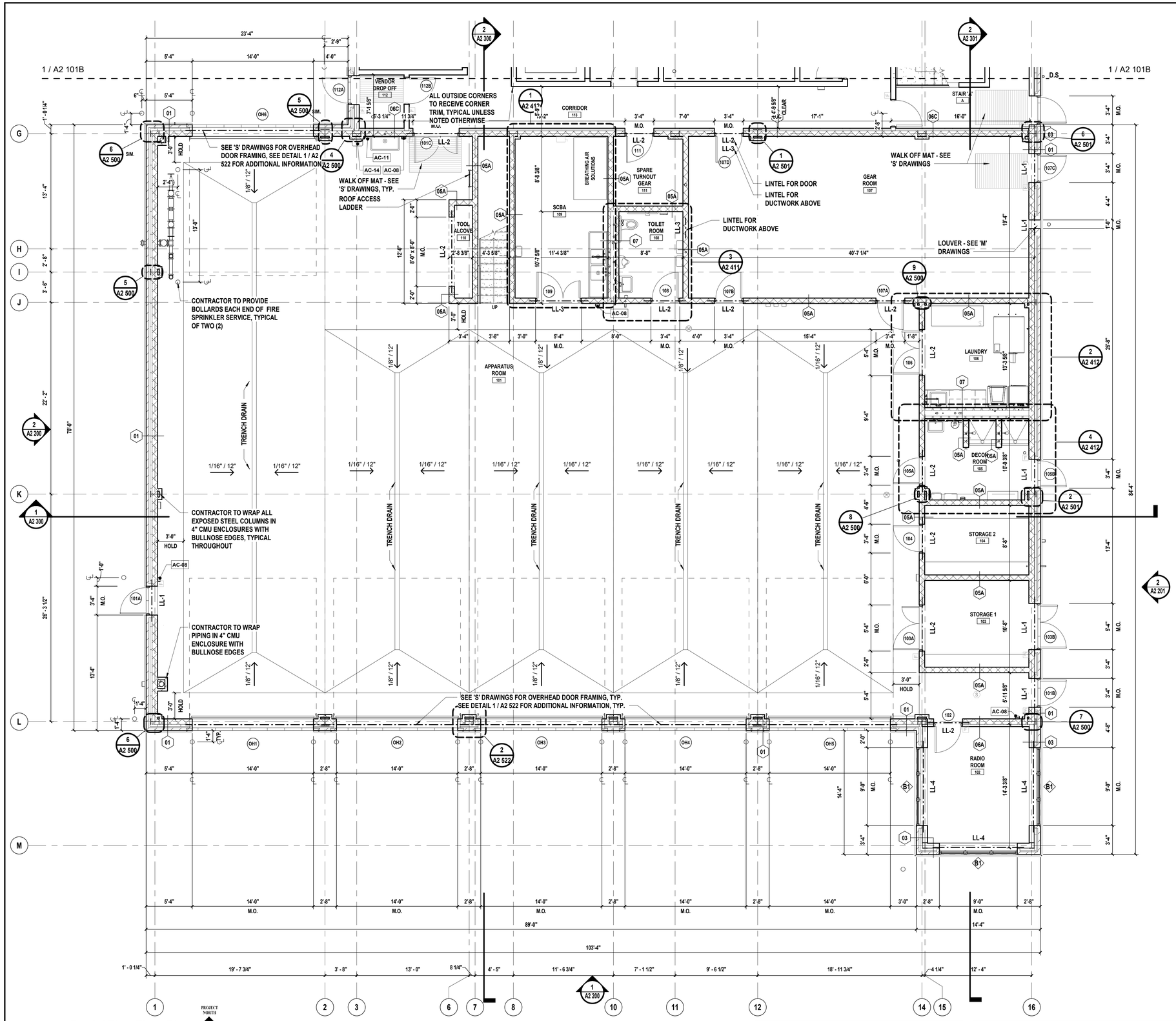

1 Partial First Floor Plan
SCALE: 3/16" = 1'-0"

GENERAL FLOOR PLAN NOTES

1. COORDINATE THE WORK INDICATED HERE WITH ALL CONTRACT DOCUMENTS AND SPECIFICATIONS.
2. FOR WALL CONSTRUCTION REFER TO PARTITION TYPES AND DETAILS ON A2 030.
3. ALL DIMENSIONS ARE TO FACE OF ROUGH STUD OR CONCRETE MASONRY UNIT (STRUCTURE), UNLESS NOTED OTHERWISE.
4. ALL DOORS IN STUD WALLS SHALL BE EITHER CENTERED ON WALLS, 4" FROM WALL TO ROUGH JAMB, OR AS NOTED OTHERWISE.
5. PROVIDE SADDLES WHERE INDICATED AT ROOM TRANSITIONS AS NOTED IN THE DOOR SCHEDULE. SADDLES TO BE FULL WIDTH OF OPENING. - SEE PROJECT MANUAL FOR ADDITIONAL INFORMATION.
6. ALL PAINTING SHALL BE PERFORMED IN ACCORDANCE WITH THE REQUIREMENTS CONTAINED IN DIVISION 9 OF THE PROJECT MANUAL.
7. REFER TO ENLARGED FLOOR PLANS, DETAILS AND ALL OTHER CONTRACT DOCUMENTS AND SPECIFICATIONS FOR ADDITIONAL FRAMING INFORMATION.
8. ALL LINTELS DENOTED AS LL-XX, SEE LINTEL SCHEDULE ON THIS SHEET AND 'S' DRAWINGS FOR ADDITIONAL INFORMATION.
9. ACCOMMODATE THE CONSTRUCTION TO ACCEPT ALL PIPING, CONDUITS, EQUIPMENT, ETC., EITHER SPECIFIED OR DETAILED TO BE RECESSED OR CONCEALED IN WALLS AS REQUIRED.
10. FOR ALL STAIRS, SEE ENLARGED PLANS, SECTIONS, AND DETAILS ON A2 430 & A2 431 DRAWINGS FOR ADDITIONAL INFORMATION.
11. ALL EXPOSED CORNERS OF CONCRETE MASONRY UNIT WALL CONSTRUCTION SHALL HAVE BULLNOSE EDGE. SEE DETAILS ON A2 500 & A2 501 DRAWINGS FOR ADDITIONAL INFORMATION.
12. ALL STRUCTURAL COLUNS TO BE ENCLOSED UNLESS NOTED OTHERWISE.

FLOOR PLAN LEGEND

OFFICE — INDICATES ROOM NAME; 10001A — INDICATES ROOM NUMBER DESIGNATION	
1	INDICATES NEW PARTITION TYPE AND PARTITION TAG. SEE PARTITION TYPES FOR ADDITIONAL INFORMATION.
101	INDICATES NEW DOOR AND DOOR TAG. SEE DOOR TYPES AND DOOR SCHEDULE FOR ADDITIONAL INFORMATION.
A	INDICATES NEW WINDOW AND WINDOW TAG. SEE WINDOW TYPES AND WINDOW SCHEDULE FOR ADDITIONAL INFORMATION.
	INDICATES WALK OFF MAT - SEE SPECIFICATIONS AND 'S' DRAWINGS FOR ADDITIONAL INFORMATION
D.S	INDICATES NEW DOWNSPOUT

LINTEL SCHEDULE

MARK	SIZE	DETAILS	COMMENTS
LL-1	(3) L3-1/2 x 3-1/2 x 5/16" AND PL 1/4" x 15" x M.O.		NOTES 1-5
LL-2	(2) L3-1/2 x 3-1/2 x 5/16"		NOTES 1, 3-5
LL-3	(2) L5 x 3-1/2x 5/16" (LLV)		NOTES 1, 3-5
LL-4	L5 x 3-1/2 x 5/16" (LLV) & PL 1/4" x 8" x M.O.		NOTES 1-5
LL-5	L3-1/2 x 3-1/2 x 5/16" & PL 1/4" x 8" x M.O.		NOTES 1-5

NOTES:

1. LINTEL LENGTH SHALL BE M.O. + 1'-4" TO PROVIDE MIN. BEARING OF 8" ONTO SOLID MASONRY ON EACH SIDE.
2. ALL EXTERIOR LINTELS TO BE SHOP APPLIED HOT DIPPED GALVANIZED.
3. WELD VERTICAL REINFORCEMENT INTERRUPTED BY MASONRY OPENINGS TO TOP OF THE STEEL LINTELS, TYPICAL.
4. REFER TO ARCHITECTURAL FLOOR PLANS AND ELEVATIONS FOR LINTEL LOCATIONS.
5. VERTICAL LEGS OF DOUBLE ANGLES SHALL BE WELDED TOGETHER.

NOTE:

REFER TO A2 200 AND A2 201 FOR WINDOW TYPE 'D' DIMENSIONAL LOCATIONS WITHIN APPARATUS BAY CLERESTORY.

INSULATION NOTE:

CONTINUOUS RIGID INSULATION (R-10) TO BE PROVIDED UNDER ENTIRE HEATED SLAB. REFER TO 'M' DRAWINGS FOR EXTENTS AND ADDITIONAL INFORMATION.

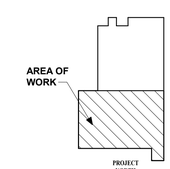

Key Plan

H2M architects + engineers
538 Broad Hollow Road, 4th Floor East
Melville, NY 11747
631.756.8000 • www.h2m.com

CONSULTANTS:

MARK	DATE	DESCRIPTION

REGISTERED ARCHITECT ROBERT BEE 032389 STATE OF NEW YORK

*ALTERATION OF THIS DOCUMENT EXCEPT BY A LICENSED PROFESSIONAL IS ILLEGAL.

DESIGNED BY:	DRAWN BY:	CHECKED BY:	REVIEWED BY:
KEM	JHG		
PROJECT No: VGFD2001	DATE: JULY 2022		SCALE: AS SHOWN

CLIENT

VAILS GATE FIRE DISTRICT

New Storage Building (Phase I)
New Fire Station (Phase II)

872 Blooming Grove Turnpike
New Windsor, NY 12553

CONTRACT

CONTRACT G
GENERAL CONSTRUCTION

STATUS

FINAL BID DOCUMENT

SHEET TITLE

ARCHITECTURE
PARTIAL FIRST FLOOR PLAN
NEW FIRE STATION
PHASE 2

DRAWING No.

A2 101A.00

C:\Users\jguzman\Documents\VGFD2001_Central21_A_jguzman.rvt

7/18/2022 8:17:48 AM

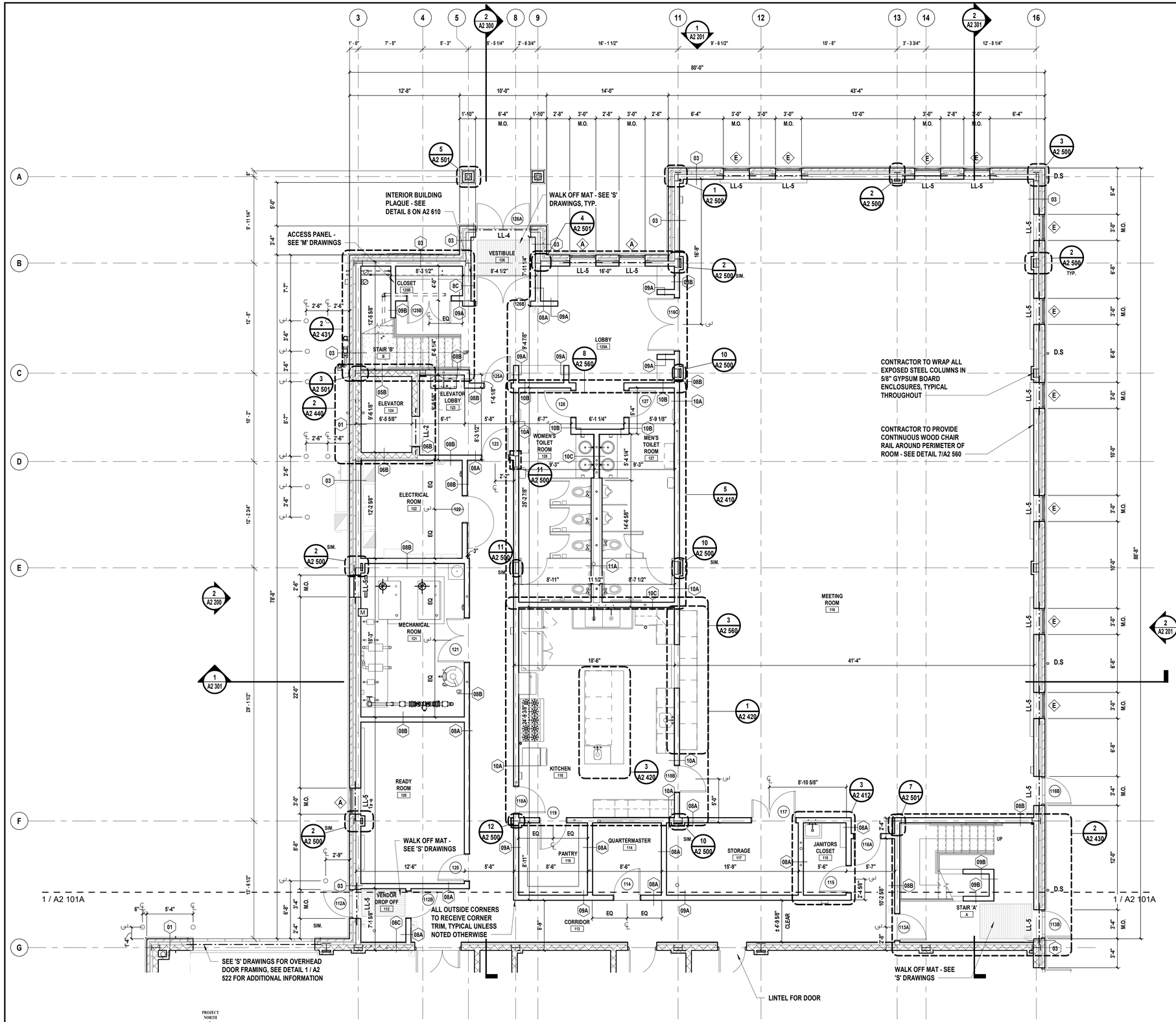

1 Partial First Floor Plan
SCALE: 3/16" = 1'-0"

GENERAL FLOOR PLAN NOTES

1. COORDINATE THE WORK INDICATED HERE WITH ALL CONTRACT DOCUMENTS AND SPECIFICATIONS.
2. FOR WALL CONSTRUCTION REFER TO PARTITION TYPES AND DETAILS ON A2 030.
3. ALL DIMENSIONS ARE TO FACE OF ROUGH STUD OR CONCRETE MASONRY UNIT (STRUCTURE), UNLESS NOTED OTHERWISE.
4. ALL DOORS IN STUD WALLS SHALL BE EITHER CENTERED ON WALLS, 4" FROM WALL TO ROUGH JAMB, OR AS NOTED OTHERWISE.
5. PROVIDE SADDLES WHERE INDICATED AT ROOM TRANSITIONS AS NOTED IN THE DOOR SCHEDULE. SADDLES TO BE FULL WIDTH OF OPENING. - SEE PROJECT MANUAL FOR ADDITIONAL INFORMATION.
6. ALL PAINTING SHALL BE PERFORMED IN ACCORDANCE WITH THE REQUIREMENTS CONTAINED IN DIVISION 9 OF THE PROJECT MANUAL.
7. REFER TO ENLARGED FLOOR PLANS, DETAILS AND ALL OTHER CONTRACT DOCUMENTS AND SPECIFICATIONS FOR ADDITIONAL FRAMING INFORMATION.
8. ALL LINTELS DENOTED AS LL-XX, SEE LINTEL SCHEDULE ON THIS SHEET AND 'S' DRAWINGS FOR ADDITIONAL INFORMATION.
9. ACCOMMODATE THE CONSTRUCTION TO ACCEPT ALL PIPING, CONDUITS, EQUIPMENT, ETC., EITHER SPECIFIED OR DETAILED TO BE RECESSED OR CONCEALED IN WALLS AS REQUIRED.
10. FOR ALL STAIRS, SEE ENLARGED PLANS, SECTIONS, AND DETAILS ON A2 430 & A2 431 DRAWINGS FOR ADDITIONAL INFORMATION.
11. ALL EXPOSED CORNERS OF CONCRETE MASONRY UNIT WALL CONSTRUCTION SHALL HAVE BULLNOSE EDGE. SEE DETAILS ON A2 500 & A2 501 DRAWINGS FOR ADDITIONAL INFORMATION.
12. ALL STRUCTURAL COLUNS TO BE ENCLOSED UNLESS NOTED OTHERWISE.

FLOOR PLAN LEGEND

OFFICE 10001A	INDICATES ROOM NAME; INDICATES ROOM NUMBER DESIGNATION
1	INDICATES NEW PARTITION TYPE AND PARTITION TAG. SEE PARTITION TYPES FOR ADDITIONAL INFORMATION.
101	INDICATES NEW DOOR AND DOOR TAG. SEE DOOR TYPES AND DOOR SCHEDULE FOR ADDITIONAL INFORMATION.
A	INDICATES NEW WINDOW AND WINDOW TAG. SEE WINDOW TYPES AND WINDOW SCHEDULE FOR ADDITIONAL INFORMATION.
	INDICATES WALK OFF MAT - SEE SPECIFICATIONS AND 'S' DRAWINGS FOR ADDITIONAL INFORMATION
D.S	INDICATES NEW DOWNSPOUT

LINTEL SCHEDULE

MARK	SIZE	DETAILS	COMMENTS
LL-1	(3) L3-1/2 x 3-1/2 x 5/16" AND PL 1/4" x 15" x M.O.		NOTES 1-5
LL-2	(2) L3-1/2 x 3-1/2 x 5/16"		NOTES 1, 3-5
LL-3	(2) L5 x 3-1/2x 5/16" (LLV)		NOTES 1, 3-5
LL-4	L5 x 3-1/2 x 5/16" (LLV) & PL 1/4" x 8" x M.O.		NOTES 1-5
LL-5	L3-1/2 x 3-1/2 x 5/16" & PL 1/4" x 8" x M.O.		NOTES 1-5

NOTES:

1. LINTEL LENGTH SHALL BE M.O. + 1'-4" TO PROVIDE MIN. BEARING OF 8" ONTO SOLID MASONRY ON EACH SIDE.
2. ALL EXTERIOR LINTELS TO BE SHOP APPLIED HOT DIPPED GALVANIZED.
3. WELD VERTICAL REINFORCEMENT INTERRUPTED BY MASONRY OPENINGS TO TOP OF THE STEEL LINTELS, TYPICAL.
4. REFER TO ARCHITECTURAL FLOOR PLANS AND ELEVATIONS FOR LINTEL LOCATIONS.
5. VERTICAL LEGS OF DOUBLE ANGLES SHALL BE WELDED TOGETHER.

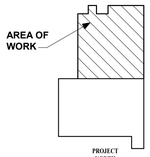

Key Plan

H2M architects + engineers
538 Broad Hollow Road, 4th Floor East
Melville, NY 11747
631.756.8000 • www.h2m.com

CONSULTANTS:

MARK	DATE	DESCRIPTION

REGISTERED ARCHITECT ROBERT BEE 032389 STATE OF NEW YORK

*ALTERATION OF THIS DOCUMENT EXCEPT BY A LICENSED PROFESSIONAL IS ILLEGAL.

DESIGNED BY:	DRAWN BY:	CHECKED BY:	REVIEWED BY:
KEM	JHG		
PROJECT No: VGFD2001	DATE: JULY 2022		SCALE: AS SHOWN

CLIENT

VAILS GATE FIRE DISTRICT

New Storage Building (Phase I)
New Fire Station (Phase II)

872 Blooming Grove Turnpike
New Windsor, NY 12553

CONTRACT
CONTRACT G
GENERAL CONSTRUCTION

STATUS
FINAL BID DOCUMENT

SHEET TITLE
ARCHITECTURE
PARTIAL FIRST FLOOR PLAN
NEW FIRE STATION
PHASE 2

DRAWING No.
A2 101B.00

C:\Users\jguzman\Documents\VGFD2001_Central21_A_jguzman.rvt
7/18/2022 8:17:53 AM

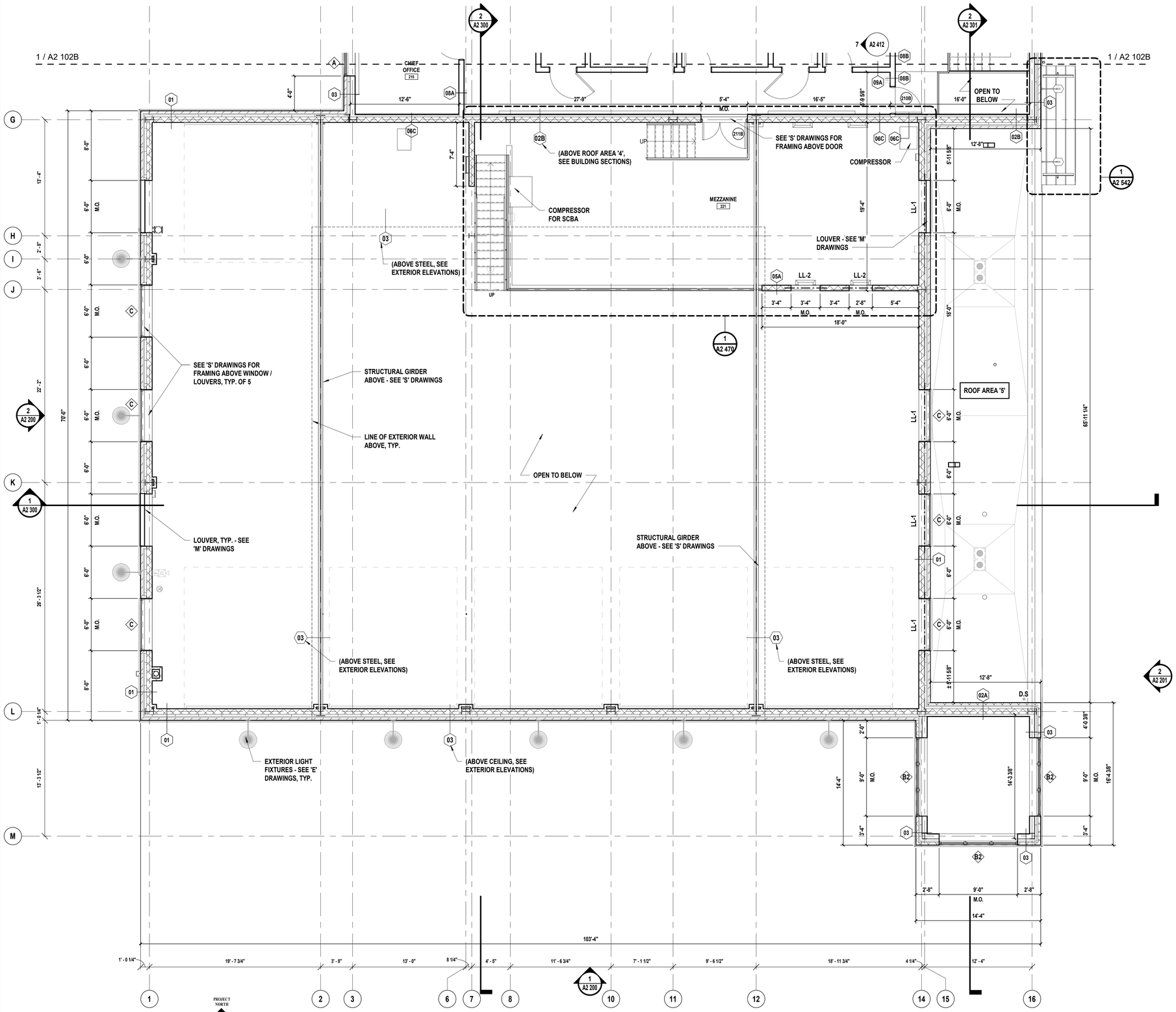

1 Partial Second Floor Plan
SCALE: 3/16" = 1'-0"

GENERAL FLOOR PLAN NOTES

1. COORDINATE THE WORK INDICATED HERE WITH ALL CONTRACT DOCUMENTS AND SPECIFICATIONS.
2. FOR WALL CONSTRUCTION REFER TO PARTITION TYPES AND DETAILS ON A2 030.
3. ALL DIMENSIONS ARE TO FACE OF ROUGH STUD OR CONCRETE MASONRY UNIT (STRUCTURE), UNLESS NOTED OTHERWISE.
4. ALL DOORS IN STUD WALLS SHALL BE EITHER CENTERED ON WALLS, 4" FROM WALL TO ROUGH JAMB, OR AS NOTED OTHERWISE.
5. PROVIDE SADDLES WHERE INDICATED AT ROOM TRANSITIONS AS NOTED IN THE DOOR SCHEDULE. SADDLES TO BE FULL WIDTH OF OPENING. - SEE PROJECT MANUAL FOR ADDITIONAL INFORMATION.
6. ALL PAINTING SHALL BE PERFORMED IN ACCORDANCE WITH THE REQUIREMENTS CONTAINED IN DIVISION 9 OF THE PROJECT MANUAL.
7. REFER TO ENLARGED FLOOR PLANS, DETAILS AND ALL OTHER CONTRACT DOCUMENTS AND SPECIFICATIONS FOR ADDITIONAL FRAMING INFORMATION.
8. ALL LINTELS DENOTED AS LL-XX, SEE LINTEL SCHEDULE ON THIS SHEET AND 'S' DRAWINGS FOR ADDITIONAL INFORMATION.
9. ACCOMMODATE THE CONSTRUCTION TO ACCEPT ALL PIPING, CONDUITS, EQUIPMENT, ETC., EITHER SPECIFIED OR DETAILED TO BE RECESSED OR CONCEALED IN WALLS AS REQUIRED.
10. FOR ALL STAIRS, SEE ENLARGED PLANS, SECTIONS, AND DETAILS ON A2 430 & A2 431 DRAWINGS FOR ADDITIONAL INFORMATION.
11. ALL EXPOSED CORNERS OF CONCRETE MASONRY UNIT WALL CONSTRUCTION SHALL HAVE BULLNOSE EDGE. SEE DETAILS ON A2 500 & A2 501 DRAWINGS FOR ADDITIONAL INFORMATION.
12. ALL STRUCTURAL COLUNS TO BE ENCLOSED UNLESS NOTED OTHERWISE.

FLOOR PLAN LEGEND

OFFICE — INDICATES ROOM NAME
10001A — INDICATES ROOM NUMBER DESIGNATION

1	INDICATES NEW PARTITION TYPE AND PARTITION TAG. SEE PARTITION TYPES FOR ADDITIONAL INFORMATION.
101	INDICATES NEW DOOR AND DOOR TAG. SEE DOOR TYPES AND DOOR SCHEDULE FOR ADDITIONAL INFORMATION.
A	INDICATES NEW WINDOW AND WINDOW TAG. SEE WINDOW TYPES AND WINDOW SCHEDULE FOR ADDITIONAL INFORMATION.
	INDICATES WALK OFF MAT - SEE SPECIFICATIONS AND 'S' DRAWINGS FOR ADDITIONAL INFORMATION
D.S	INDICATES NEW DOWNSPOUT

NOTE:

REFER TO A2 200 AND A2 201 FOR WINDOW TYPE 'D' DIMENSIONAL LOCATIONS WITHIN APPARATUS BAY CLERESTORY.

LINTEL SCHEDULE

MARK	SIZE	DETAILS	COMMENTS
LL-1	(3) L3-1/2 x 3-1/2 x 5/16" AND PL 1/4" x 15" x M.O.		NOTES 1-5
LL-2	(2) L3-1/2 x 3-1/2 x 5/16"		NOTES 1, 3-5
LL-3	(2) L5 x 3-1/2x 5/16" (LLV)		NOTES 1, 3-5
LL-4	L5 x 3-1/2 x 5/16" (LLV) & PL 1/4" x 8" x M.O.		NOTES 1-5
LL-5	L3-1/2 x 3-1/2 x 5/16" & PL 1/4" x 8" x M.O.		NOTES 1-5

NOTES:

1. LINTEL LENGTH SHALL BE M.O. + 1'-4" TO PROVIDE MIN. BEARING OF 8" ONTO SOLID MASONRY ON EACH SIDE.
2. ALL EXTERIOR LINTELS TO BE SHOP APPLIED HOT DIPPED GALVANIZED.
3. WELD VERTICAL REINFORCEMENT INTERRUPTED BY MASONRY OPENINGS TO TOP OF THE STEEL LINTELS, TYPICAL.
4. REFER TO ARCHITECTURAL FLOOR PLANS AND ELEVATIONS FOR LINTEL LOCATIONS.
5. VERTICAL LEGS OF DOUBLE ANGLES SHALL BE WELDED TOGETHER.

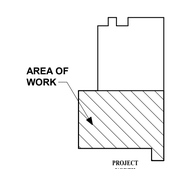

Key Plan

H2M architects + engineers
538 Broad Hollow Road, 4th Floor East
Melville, NY 11747
631.756.8000 • www.h2m.com

CONSULTANTS:

MARK	DATE	DESCRIPTION

REGISTERED ARCHITECT ROBERT BEE 032389 STATE OF NEW YORK

*ALTERATION OF THIS DOCUMENT EXCEPT BY A LICENSED PROFESSIONAL IS ILLEGAL.

DESIGNED BY:	DRAWN BY:	CHECKED BY:	REVIEWED BY:
KEM	JHG		

PROJECT No:	DATE:	SCALE:
VGFD2001	JULY 2022	AS SHOWN

CLIENT

VAILS GATE FIRE DISTRICT

New Storage Building (Phase I)
New Fire Station (Phase II)

872 Blooming Grove Turnpike
New Windsor, NY 12553

CONTRACT
CONTRACT G
GENERAL CONSTRUCTION

STATUS
FINAL BID DOCUMENT

SHEET TITLE
ARCHITECTURE
MEZZANINE FLOOR PLAN
NEW FIRE STATION
PHASE 2

DRAWING No.
A2 102A.00

C:\Users\jguzman\Documents\VGFD2001_Central2_A_jguzman.rvt
7/18/2022 8:17:59 AM

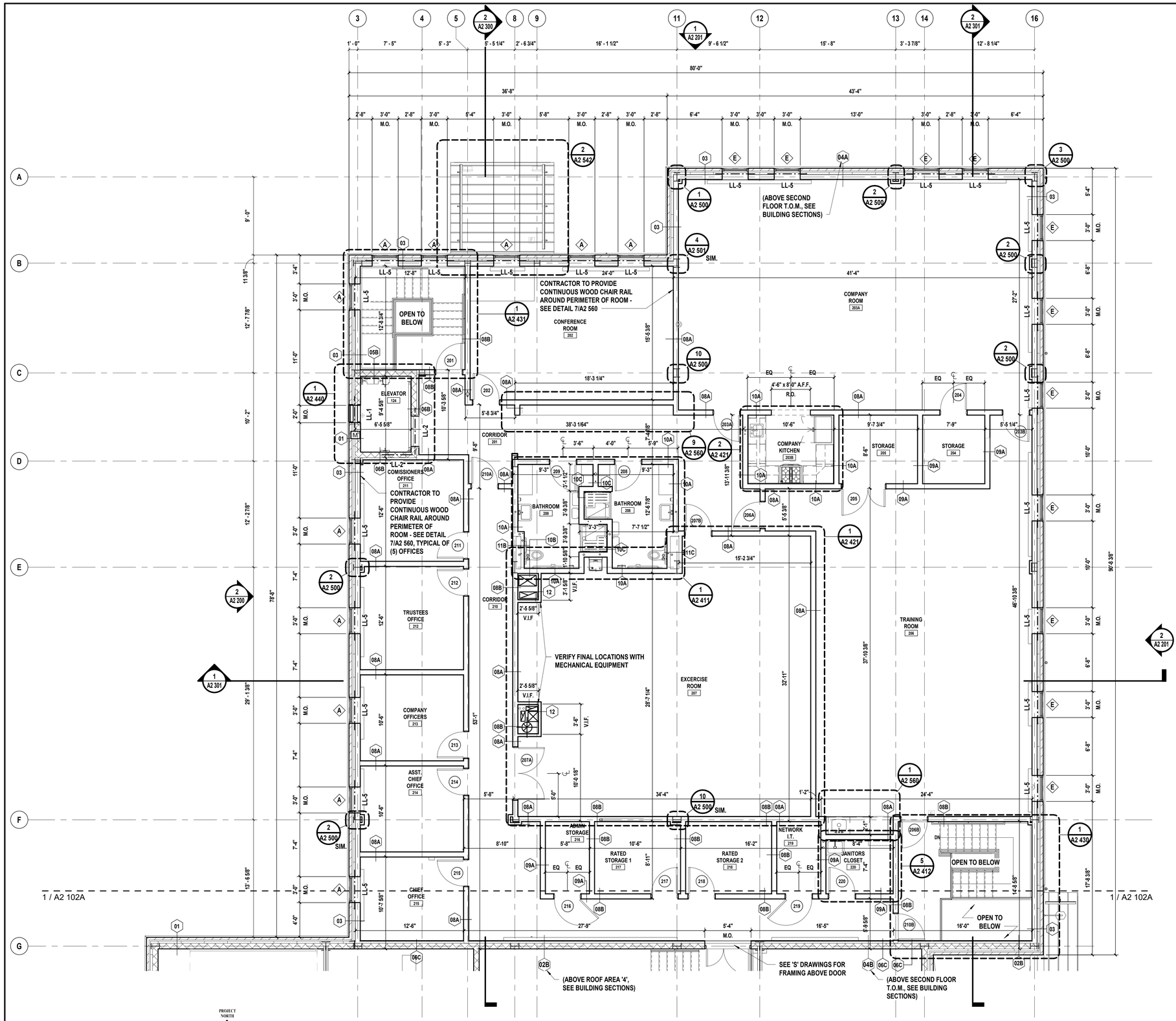

1 **Partial Second Floor Plan**
SCALE: 3/16" = 1'-0"

GENERAL FLOOR PLAN NOTES

1. COORDINATE THE WORK INDICATED HERE WITH ALL CONTRACT DOCUMENTS AND SPECIFICATIONS.
2. FOR WALL CONSTRUCTION REFER TO PARTITION TYPES AND DETAILS ON A2 030.
3. ALL DIMENSIONS ARE TO FACE OF ROUGH STUD OR CONCRETE MASONRY UNIT (STRUCTURE), UNLESS NOTED OTHERWISE.
4. ALL DOORS IN STUD WALLS SHALL BE EITHER CENTERED ON WALLS, 4" FROM WALL TO ROUGH JAMB, OR AS NOTED OTHERWISE.
5. PROVIDE SADDLES WHERE INDICATED AT ROOM TRANSITIONS AS NOTED IN THE DOOR SCHEDULE. SADDLES TO BE FULL WIDTH OF OPENING. - SEE PROJECT MANUAL FOR ADDITIONAL INFORMATION.
6. ALL PAINTING SHALL BE PERFORMED IN ACCORDANCE WITH THE REQUIREMENTS CONTAINED IN DIVISION 9 OF THE PROJECT MANUAL.
7. REFER TO ENLARGED FLOOR PLANS, DETAILS AND ALL OTHER CONTRACT DOCUMENTS AND SPECIFICATIONS FOR ADDITIONAL FRAMING INFORMATION.
8. ALL LINTELS DENOTED AS LL-XX, SEE LINTEL SCHEDULE ON THIS SHEET AND 'S' DRAWINGS FOR ADDITIONAL INFORMATION.
9. ACCOMMODATE THE CONSTRUCTION TO ACCEPT ALL PIPING, CONDUITS, EQUIPMENT, ETC., EITHER SPECIFIED OR DETAILED TO BE RECESSED OR CONCEALED IN WALLS AS REQUIRED.
10. FOR ALL STAIRS, SEE ENLARGED PLANS, SECTIONS, AND DETAILS ON A2 430 & A2 431 DRAWINGS FOR ADDITIONAL INFORMATION.
11. ALL EXPOSED CORNERS OF CONCRETE MASONRY UNIT WALL CONSTRUCTION SHALL HAVE BULLNOSE EDGE. SEE DETAILS ON A2 500 & A2 501 DRAWINGS FOR ADDITIONAL INFORMATION.
12. ALL STRUCTURAL COLUNS TO BE ENCLOSED UNLESS NOTED OTHERWISE.

FLOOR PLAN LEGEND

OFFICE — INDICATES ROOM NAME
10001A — INDICATES ROOM NUMBER DESIGNATION

1	INDICATES NEW PARTITION TYPE AND PARTITION TAG. SEE PARTITION TYPES FOR ADDITIONAL INFORMATION.
101	INDICATES NEW DOOR AND DOOR TAG. SEE DOOR TYPES AND DOOR SCHEDULE FOR ADDITIONAL INFORMATION.
A	INDICATES NEW WINDOW AND WINDOW TAG. SEE WINDOW TYPES AND WINDOW SCHEDULE FOR ADDITIONAL INFORMATION.
	INDICATES WALK OFF MAT - SEE SPECIFICATIONS AND 'S' DRAWINGS FOR ADDITIONAL INFORMATION

NOTE: REFER TO A2 200 AND A2 201 FOR WINDOW TYPE 'D' DIMENSIONAL LOCATIONS WITHIN APPARATUS BAY CLERESTORY.

LINTEL SCHEDULE

MARK	SIZE	DETAILS	COMMENTS
LL-1	(3) L3-1/2 x 3-1/2 x 5/16" AND PL 1/4" x 15" x M.O.		NOTES 1-5
LL-2	(2) L3-1/2 x 3-1/2 x 5/16"		NOTES 1, 3-5
LL-3	(2) L5 x 3-1/2x 5/16" (LLV)		NOTES 1, 3-5
LL-4	L5 x 3-1/2 x 5/16" (LLV) & PL 1/4" x 8" x M.O.		NOTES 1-5
LL-5	L3-1/2 x 3-1/2 x 5/16" & PL 1/4" x 8" x M.O.		NOTES 1-5

NOTES:

1. LINTEL LENGTH SHALL BE M.O. + 1'-4" TO PROVIDE MIN. BEARING OF 8" ONTO SOLID MASONRY ON EACH SIDE.
2. ALL EXTERIOR LINTELS TO BE SHOP APPLIED HOT DIPPED GALVANIZED.
3. WELD VERTICAL REINFORCEMENT INTERRUPTED BY MASONRY OPENINGS TO TOP OF THE STEEL LINTELS, TYPICAL.
4. REFER TO ARCHITECTURAL FLOOR PLANS AND ELEVATIONS FOR LINTEL LOCATIONS.
5. VERTICAL LEGS OF DOUBLE ANGLES SHALL BE WELDED TOGETHER.

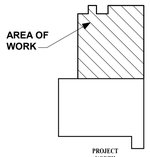

Key Plan

H2M architects + engineers
538 Broad Hollow Road, 4th Floor East
Melville, NY 11747
631.756.8000 • www.h2m.com

CONSULTANTS:

MARK	DATE	DESCRIPTION

REGISTERED ARCHITECT ROBERT BEE 032389 STATE OF NEW YORK

*ALTERATION OF THIS DOCUMENT EXCEPT BY A LICENSED PROFESSIONAL IS ILLEGAL.

DESIGNED BY:	DRAWN BY:	CHECKED BY:	REVIEWED BY:
KEM	JHG		
PROJECT No: VGFD2001	DATE: JULY 2022		SCALE: AS SHOWN

CLIENT

VAILS GATE FIRE DISTRICT

New Storage Building (Phase I)
New Fire Station (Phase II)

872 Blooming Grove Turnpike
New Windsor, NY 12553

CONTRACT
CONTRACT G
GENERAL CONSTRUCTION

STATUS
FINAL BID DOCUMENT

SHEET TITLE
ARCHITECTURE
SECOND FLOOR PLAN
NEW FIRE STATION
PHASE 2

DRAWING No.
A2 102B.00

C:\Users\jguzman\Documents\VGFD2001_Central21_A_jguzman.rvt
7/18/2022 8:31:18 AM

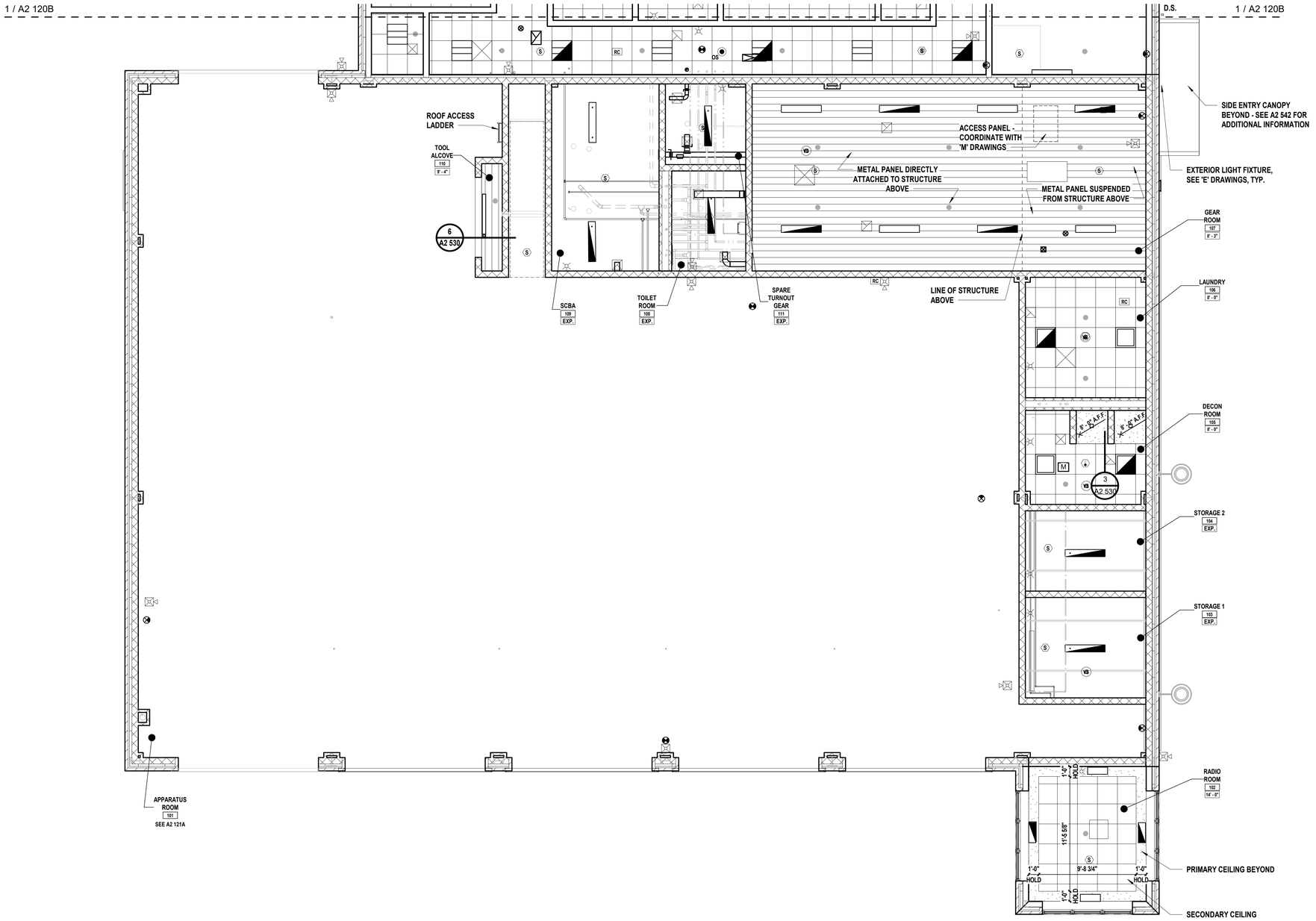

1 Partial First Floor RCP

SCALE: 3/16" = 1'-0"

PROJECT NORTH

RCP LEGEND

OFFICE — INDICATES ROOM NAME
10001A — INDICATES ROOM NUMBER DESIGNATION
12'-0" — INDICATES CEILING HEIGHT

EXP.	INDICATES AREAS OF EXPOSED CEILINGS
7'-0" A.F.F.	INDICATES HEIGHT OF SOFFITS
	INDICATES ACOUSTICAL PANEL AND GRID SYSTEM
	INDICATES METAL PANEL CEILING SYSTEM OR EXTERIOR VENTED ALUMINUM SOFFIT
	INDICATES GYPSUM BOARD CEILING
	INDICATES 2X2 RECESSED LIGHT FIXTURE - SEE 'E' DRAWINGS
	INDICATES 2X2 RECESSED LIGHT FIXTURE - SEE 'E' DRAWINGS
	INDICATES 2X2 RECESSED EMERGENCY LIGHT FIXTURE - SEE 'E' DRAWINGS
	INDICATES CEILING HUNG PENDENT LIGHT FIXTURE / EMERGENCY LIGHT FIXTURE - SEE 'E' DRAWINGS
	INDICATES 1x4 LINEAR SURFACE LIGHT FIXTURE - SEE 'E' DRAWINGS
	INDICATES 1x2 LINEAR SURFACE LIGHT FIXTURE / EMERGENCY LIGHT FIXTURE- SEE 'E' DRAWINGS
	INDICATES EXTERIOR GOOSE NECK LIGHT FIXTURE - SEE 'E' DRAWINGS
S	INDICATES SMOKE DETECTOR - SEE 'FA' DRAWINGS
	INDICATES HEAT DETECTOR - SEE 'FA' DRAWINGS
CO	INDICATES CARBON MONOXIDE DETECTOR - SEE 'FA' DRAWINGS
	INDICATES FIRE ALARM STROBE DETECTOR - SEE 'FA' DRAWINGS
	INDICATES STROBE FIRE ALARM HORN - SEE 'FA' DRAWINGS
	INDICATES 12X12 AT-EXHAUST GRILL - SEE 'M' DRAWINGS
	INDICATES 24X24 ROUND NECK SUPPLY DIFFUSER - SEE 'M' DRAWINGS
	INDICATES FIRE SPRINKLER HEAD - SEE 'FP' DWGS
	INDICATES UPRIGHT SPRINKLER TYPE - SEE 'FP' DWGS
	INDICATES HORIZONTAL SIDE WALL SPRINKLER TYPE - SEE 'FP' DWGS
VS	INDICATES VACANCY SENSOR - SEE 'E' DRAWINGS
RC	INDICATES ROOM CONTROLLER POWER PACK - SEE 'E' DRAWINGS
	INDICATES EXIT LIGHTING - SEE 'E' DRAWINGS

NOTE:
REFER TO SHEET A2 120B FOR GENERAL RCP NOTES.

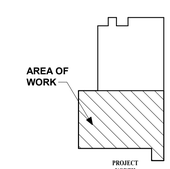

Key Plan

PROJECT NORTH

H2M architects + engineers
538 Broad Hollow Road, 4th Floor East
Melville, NY 11747
631.756.8000 • www.h2m.com

CONSULTANTS:

MARK	DATE	DESCRIPTION

REGISTERED ARCHITECT ROBERT BEE 032389 STATE OF NEW YORK

*ALTERATION OF THIS DOCUMENT EXCEPT BY A LICENSED PROFESSIONAL IS ILLEGAL.

DESIGNED BY:	DRAWN BY:	CHECKED BY:	REVIEWED BY:
KEM	JHG		
PROJECT No: VGFD2001	DATE: JULY 2022		SCALE: AS SHOWN

CLIENT
VAILS GATE FIRE DISTRICT

New Storage Building (Phase I)
New Fire Station (Phase II)

872 Blooming Grove Turnpike
New Windsor, NY 12553

CONTRACT
CONTRACT G
GENERAL CONSTRUCTION

STATUS
FINAL BID DOCUMENT

SHEET TITLE
ARCHITECTURE
REFLECTED CEILING PLAN PARTIAL
FIRST FLOOR
NEW FIRE STATION
PHASE 2

DRAWING No.
A2 120A.00

C:\Users\jguzman\Documents\VGFD2001_Central21_A_jguzman.rvt

7/18/2022 8:18:06 AM

REFLECTED CEILING PLAN NOTES

1. CONTRACTOR IS TO COORDINATE ALL THE WORK REQUIRED ON THIS DRAWING WITH ALL ARCHITECTURAL, STRUCTURAL, MEP DRAWINGS AND SPECIFICATIONS.
2. CONTRACTOR IS TO ACCOMODATE THE CONSTRUCTION TO ACCEPT ALL PIPING, CONDUITS, EQUIPMENT, ETC., EITHER SPECIFIED OR DETAILED TO BE RECESSED OR CONCEALED IN MASONRY WALLS AS REQUIRED BY THIS CONTRACT. COORDINATE THE LOCATION OF ANY RECESSED OR CONCEALED ITEMS.
3. SUSPENDED CEILING SYSTEM SHALL BE CENTERED WITHIN THE ROOM IN BOTH DIRECTIONS UNLESS SPECIFICALLY NOTED DIFFERENTLY ON DRAWINGS.
4. SEE CEILING DETAILS ON DRAWING A2 530.00 FOR ADDITIONAL INFORMATION.
5. SEE FINISH SCHEDULE ON A2 600.00 FOR CEILING TYPES.
6. ALL EQUIPMENT AND FIXTURES SCHEDULED TO BE INSTALLED WITHIN THE CEILING GRID SHALL BE CENTERED WITHIN THE PANELS.
7. ALL CEILING HEIGHTS SHOWN ARE MEASURED OFF OF SCHEDULED FINISH FLOOR ELEVATION. (0'-0")

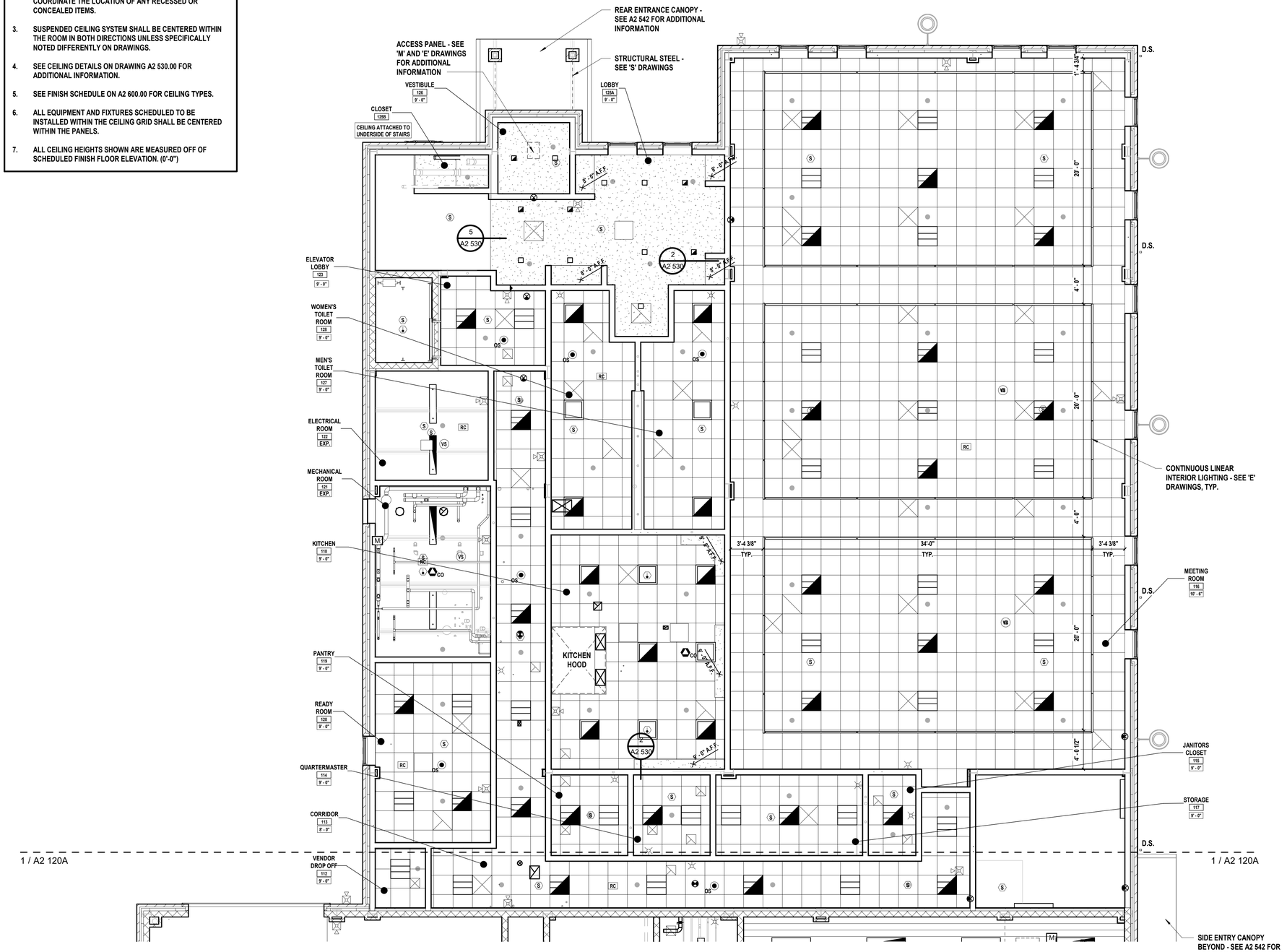

1 Partial First Floor RCP
SCALE: 3/16" = 1'-0"

RCP LEGEND

OFFICE — INDICATES ROOM NAME
10001A — INDICATES ROOM NUMBER DESIGNATION
12'-0" — INDICATES CEILING HEIGHT

EXP.	INDICATES AREAS OF EXPOSED CEILINGS
1'-0" A.F.F.	INDICATES HEIGHT OF SOFFITS
	INDICATES ACOUSTICAL PANEL AND GRID SYSTEM
	INDICATES METAL PANEL CEILING SYSTEM OR EXTERIOR VENTED ALUMINUM SOFFIT
	INDICATES GYPSUM BOARD CEILING
	INDICATES 2X2 RECESSED LIGHT FIXTURE - SEE 'E' DRAWINGS
	INDICATES 2X2 RECESSED LIGHT FIXTURE - SEE 'E' DRAWINGS
	INDICATES 2X2 RECESSED EMERGENCY LIGHT FIXTURE - SEE 'E' DRAWINGS
	INDICATES CEILING HUNG PENDENT LIGHT FIXTURE / EMERGENCY LIGHT FIXTURE - SEE 'E' DRAWINGS
	INDICATES 1x4 LINEAR SURFACE LIGHT FIXTURE - SEE 'E' DRAWINGS
	INDICATES 1x2 LINEAR SURFACE LIGHT FIXTURE / EMERGENCY LIGHT FIXTURE- SEE 'E' DRAWINGS
	INDICATES EXTERIOR GOOSE NECK LIGHT FIXTURE - SEE 'E' DRAWINGS
S	INDICATES SMOKE DETECTOR - SEE 'FA' DRAWINGS
	INDICATES HEAT DETECTOR - SEE 'FA' DRAWINGS
CO	INDICATES CARBON MONOXIDE DETECTOR - SEE 'FA' DRAWINGS
	INDICATES FIRE ALARM STROBE DETECTOR - SEE 'FA' DRAWINGS
	INDICATES STROBE FIRE ALARM HORN - SEE 'FA' DRAWINGS
	INDICATES 12X12 AT-EXHAUST GRILL - SEE 'M' DRAWINGS
	INDICATES 24X24 ROUND NECK SUPPLY DIFFUSER - SEE 'M' DRAWINGS
	INDICATES FIRE SPRINKLER HEAD - SEE 'FP' DWGS
	INDICATES UPRIGHT SPRINKLER TYPE - SEE 'FP' DWGS
	INDICATES HORIZONTAL SIDE WALL SPRINKLER TYPE - SEE 'FP' DWGS
VS	INDICATES VACANCY SENSOR - SEE 'E' DRAWINGS
RC	INDICATES ROOM CONTROLLER POWER PACK - SEE 'E' DRAWINGS
	INDICATES EXIT LIGHTING - SEE 'E' DRAWINGS

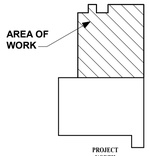

Key Plan

H2M architects + engineers
538 Broad Hollow Road, 4th Floor East
Melville, NY 11747
631.756.8000 • www.h2m.com

CONSULTANTS:

MARK	DATE	DESCRIPTION

REGISTERED ARCHITECT ROBERT BEE 032389 STATE OF NEW YORK

*ALTERATION OF THIS DOCUMENT EXCEPT BY A LICENSED PROFESSIONAL IS ILLEGAL.

DESIGNED BY:	DRAWN BY:	CHECKED BY:	REVIEWED BY:
KEM	JHG		

PROJECT No:	DATE:	SCALE:
VGFD2001	JULY 2022	AS SHOWN

CLIENT
VAILS GATE FIRE DISTRICT

New Storage Building (Phase I)
New Fire Station (Phase II)

872 Blooming Grove Turnpike
New Windsor, NY 12553

CONTRACT
CONTRACT G
GENERAL CONSTRUCTION

STATUS
FINAL BID DOCUMENT

SHEET TITLE
ARCHITECTURE
REFLECTED CEILING PLAN PARTIAL
FIRST FLOOR
NEW FIRE STATION
PHASE 2

DRAWING No.
A2 120B.00

C:\Users\jguzman\Documents\VGFD2001_Central21_A_jguzman.rvt
7/18/2022 8:37:41 AM

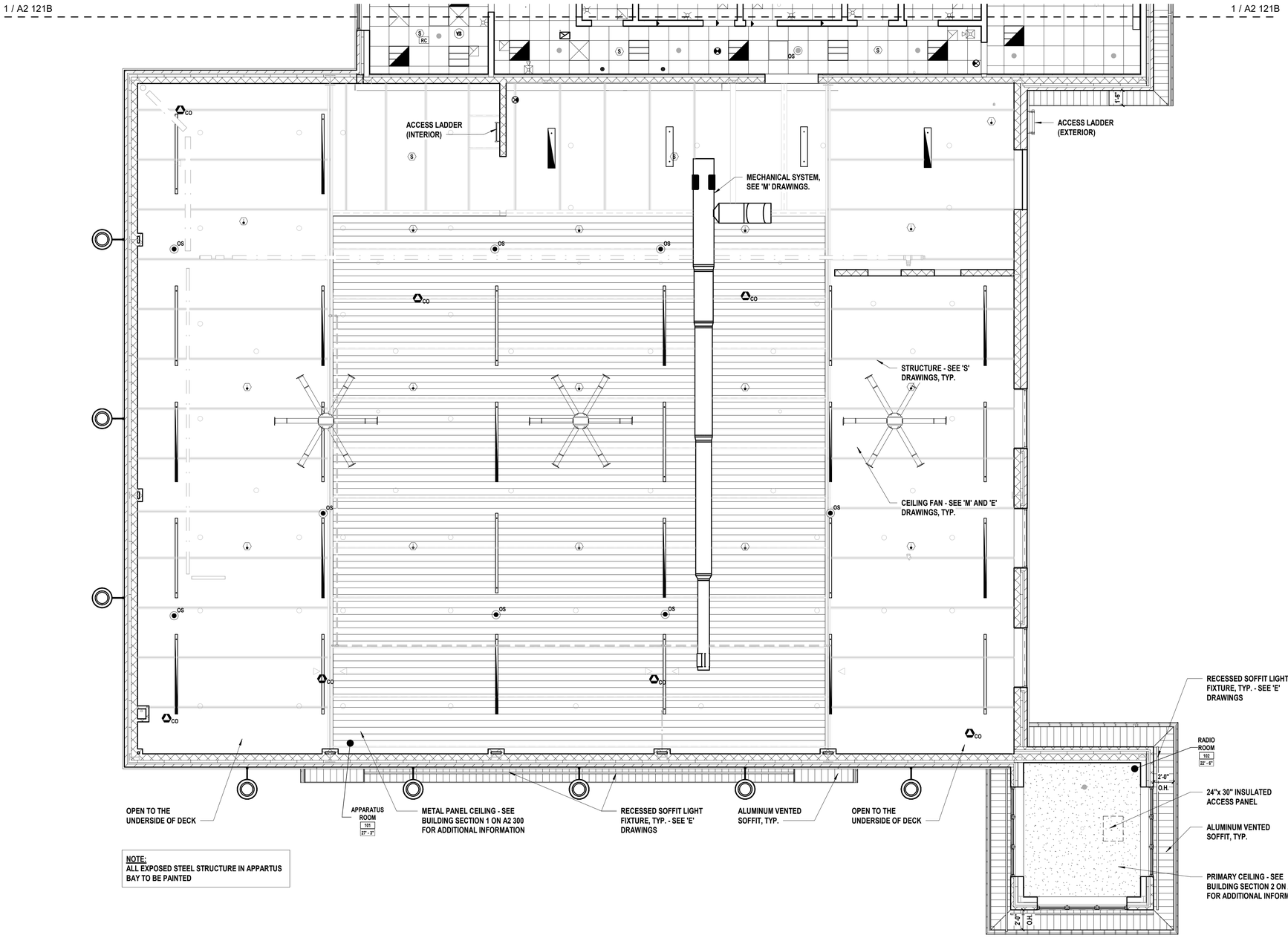

NOTE:
ALL EXPOSED STEEL STRUCTURE IN APPARTUS BAY TO BE PAINTED

RCP LEGEND

OFFICE — INDICATES ROOM NAME
10001A — INDICATES ROOM NUMBER DESIGNATION
12'-0" — INDICATES CEILING HEIGHT

EXP.	INDICATES AREAS OF EXPOSED CEILINGS
1'-0" A.F.F.	INDICATES HEIGHT OF SOFFITS
	INDICATES ACOUSTICAL PANEL AND GRID SYSTEM
	INDICATES METAL PANEL CEILING SYSTEM OR EXTERIOR VENTED ALUMINUM SOFFIT
	INDICATES GYPSUM BOARD CEILING
	INDICATES 2X2 RECESSED LIGHT FIXTURE - SEE 'E' DRAWINGS
	INDICATES 2X2 RECESSED LIGHT FIXTURE - SEE 'E' DRAWINGS
	INDICATES 2X2 RECESSED EMERGENCY LIGHT FIXTURE - SEE 'E' DRAWINGS
	INDICATES CEILING HUNG PENDENT LIGHT FIXTURE / EMERGENCY LIGHT FIXTURE - SEE 'E' DRAWINGS
	INDICATES 1x4 LINEAR SURFACE LIGHT FIXTURE - SEE 'E' DRAWINGS
	INDICATES 1x2 LINEAR SURFACE LIGHT FIXTURE / EMERGENCY LIGHT FIXTURE- SEE 'E' DRAWINGS
	INDICATES EXTERIOR GOOSE NECK LIGHT FIXTURE - SEE 'E' DRAWINGS
S	INDICATES SMOKE DETECTOR - SEE 'FA' DRAWINGS
	INDICATES HEAT DETECTOR - SEE 'FA' DRAWINGS
CO	INDICATES CARBON MONOXIDE DETECTOR - SEE 'FA' DRAWINGS
	INDICATES FIRE ALARM STROBE DETECTOR - SEE 'FA' DRAWINGS
	INDICATES STROBE FIRE ALARM HORN - SEE 'FA' DRAWINGS
	INDICATES 12X12 AT-EXHAUST GRILL - SEE 'M' DRAWINGS
	INDICATES 24X24 ROUND NECK SUPPLY DIFFUSER - SEE 'M' DRAWINGS
	INDICATES FIRE SPRINKLER HEAD - SEE 'FP' DWGS
	INDICATES UPRIGHT SPRINKLER TYPE - SEE 'FP' DWGS
	INDICATES HORIZONTAL SIDE WALL SPRINKLER TYPE - SEE 'FP' DWGS
VS	INDICATES VACANCY SENSOR - SEE 'E' DRAWINGS
RC	INDICATES ROOM CONTROLLER POWER PACK - SEE 'E' DRAWINGS
	INDICATES EXIT LIGHTING - SEE 'E' DRAWINGS

NOTE:
REFER TO SHEET A2 120B FOR GENERAL RCP NOTES.

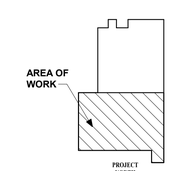

Key Plan

1 Partial Second Floor RCP
SCALE: 3/16" = 1'-0"

H2M architects + engineers
538 Broad Hollow Road, 4th Floor East
Melville, NY 11747
631.756.8000 • www.h2m.com

CONSULTANTS:

MARK	DATE	DESCRIPTION

REGISTERED ARCHITECT ROBERT BEE 032389 STATE OF NEW YORK

"ALTERATION OF THIS DOCUMENT EXCEPT BY A LICENSED PROFESSIONAL IS ILLEGAL"

DESIGNED BY:	DRAWN BY:	CHECKED BY:	REVIEWED BY:
KEM	JHG		
PROJECT No: VGFD2001	DATE: JULY 2022		SCALE: AS SHOWN

CLIENT
VAILS GATE FIRE DISTRICT

New Storage Building (Phase I)
New Fire Station (Phase II)

872 Blooming Grove Turnpike
New Windsor, NY 12553

CONTRACT
CONTRACT G
GENERAL CONSTRUCTION

STATUS
FINAL BID DOCUMENT

SHEET TITLE
ARCHITECTURE
REFLECTED CEILING PLAN
MEZZANINE PLAN
NEW FIRE STATION
PHASE 2

DRAWING No.
A2 121A.00

C:\Users\jguzman\Documents\VGFD2001_Central21_A_jguzman.rvt
7/18/2022 8:18:14 AM

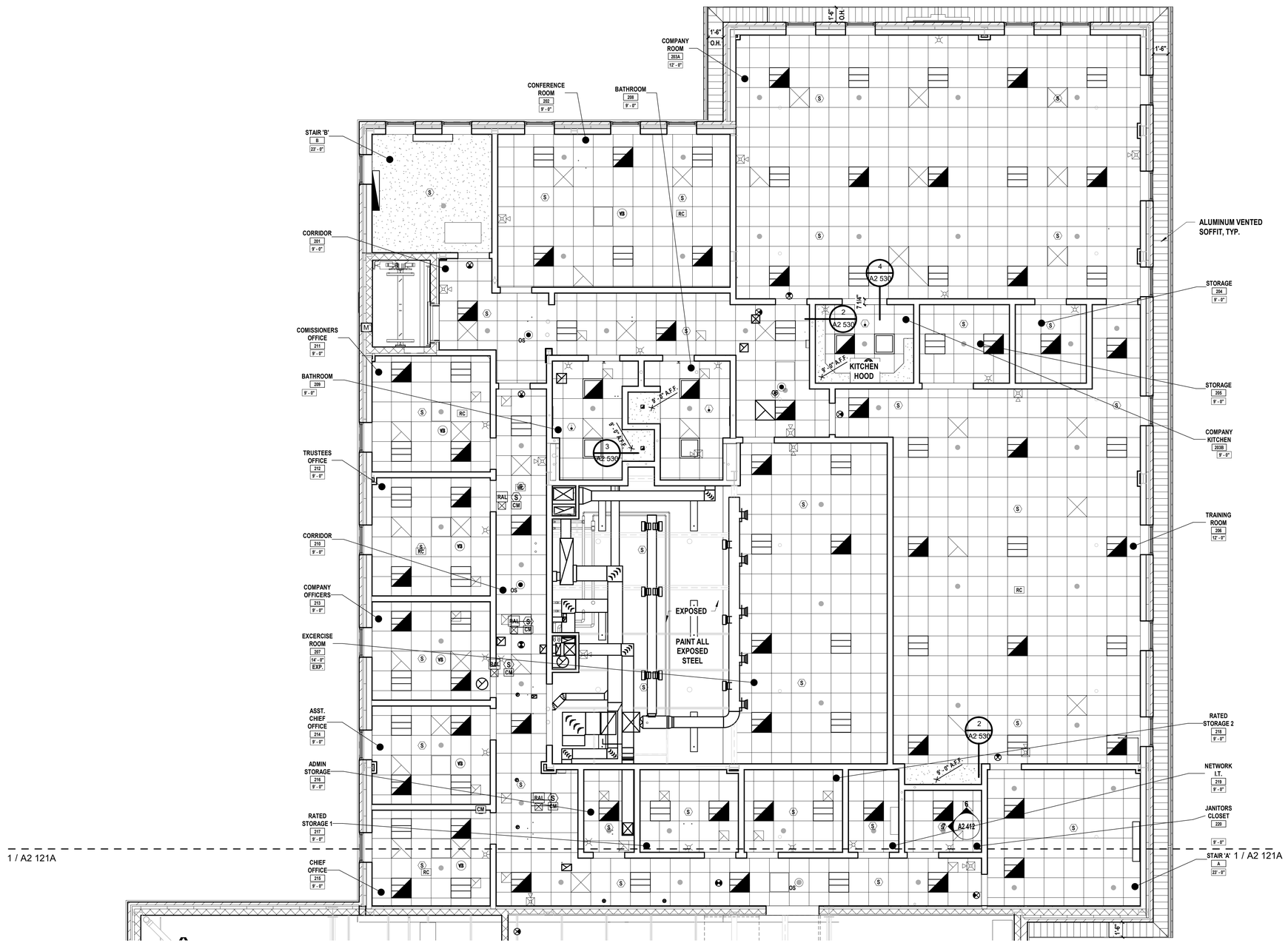

1 Partial Second Floor RCP
SCALE: 3/16" = 1'-0"

PROJECT NORTH

RCP LEGEND

OFFICE / 10001A / 12'-0"	INDICATES ROOM NAME; INDICATES ROOM NUMBER DESIGNATION; INDICATES CEILING HEIGHT
EXP.	INDICATES AREAS OF EXPOSED CEILINGS
1'-0" A.F.F.	INDICATES HEIGHT OF SOFFITS
	INDICATES ACOUSTICAL PANEL AND GRID SYSTEM
	INDICATES METAL PANEL CEILING SYSTEM OR EXTERIOR VENTED ALUMINUM SOFFIT
	INDICATES GYPSUM BOARD CEILING
	INDICATES 2X2 RECESSED LIGHT FIXTURE - SEE 'E' DRAWINGS
	INDICATES 2X2 RECESSED LIGHT FIXTURE - SEE 'E' DRAWINGS
	INDICATES 2X2 RECESSED EMERGENCY LIGHT FIXTURE - SEE 'E' DRAWINGS
	INDICATES CEILING HUNG PENDENT LIGHT FIXTURE / EMERGENCY LIGHT FIXTURE - SEE 'E' DRAWINGS
	INDICATES 1x4 LINEAR SURFACE LIGHT FIXTURE - SEE 'E' DRAWINGS
	INDICATES 1x2 LINEAR SURFACE LIGHT FIXTURE / EMERGENCY LIGHT FIXTURE- SEE 'E' DRAWINGS
	INDICATES EXTERIOR GOOSE NECK LIGHT FIXTURE - SEE 'E' DRAWINGS
S	INDICATES SMOKE DETECTOR - SEE 'FA' DRAWINGS
	INDICATES HEAT DETECTOR - SEE 'FA' DRAWINGS
CO	INDICATES CARBON MONOXIDE DETECTOR - SEE 'FA' DRAWINGS
	INDICATES FIRE ALARM STROBE DETECTOR - SEE 'FA' DRAWINGS
	INDICATES STROBE FIRE ALARM HORN - SEE 'FA' DRAWINGS
	INDICATES 12X12 AT-EXHAUST GRILL - SEE 'M' DRAWINGS
	INDICATES 24X24 ROUND NECK SUPPLY DIFFUSER - SEE 'M' DRAWINGS
	INDICATES FIRE SPRINKLER HEAD - SEE 'FP' DWGS
	INDICATES UPRIGHT SPRINKLER TYPE - SEE 'FP' DWGS
	INDICATES HORIZONTAL SIDE WALL SPRINKLER TYPE - SEE 'FP' DWGS
VS	INDICATES VACANCY SENSOR - SEE 'E' DRAWINGS
RC	INDICATES ROOM CONTROLLER POWER PACK - SEE 'E' DRAWINGS
NOTE:	INDICATES EXIT LIGHTING - SEE 'E' DRAWINGS

REFER TO SHEET A2 120B FOR GENERAL RCP NOTES.

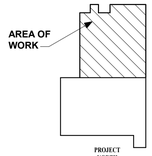

Key Plan

PROJECT NORTH

H2M architects + engineers
538 Broad Hollow Road, 4th Floor East
Melville, NY 11747
631.756.8000 • www.h2m.com

CONSULTANTS:

MARK	DATE	DESCRIPTION

REGISTERED ARCHITECT ROBERT BEE 032389 STATE OF NEW YORK

*ALTERATION OF THIS DOCUMENT EXCEPT BY A LICENSED PROFESSIONAL IS ILLEGAL.

DESIGNED BY:	DRAWN BY:	CHECKED BY:	REVIEWED BY:
KEM	JHG		
PROJECT No: VGFD2001	DATE: JULY 2022		SCALE: AS SHOWN

CLIENT

VAILS GATE FIRE DISTRICT

New Storage Building (Phase I)
New Fire Station (Phase II)

872 Blooming Grove Turnpike
New Windsor, NY 12553

CONTRACT
CONTRACT G
GENERAL CONSTRUCTION

STATUS
FINAL BID DOCUMENT

SHEET TITLE
ARCHITECTURE
REFLECTED CEILING PLAN PARTIAL
SECOND FLOOR
NEW FIRE STATION
PHASE 2

DRAWING No.
A2 121B.00

C:\Users\jguzman\Documents\VGFD2001_Central21_A_jguzman.rvt

7/18/2022 8:18:18 AM

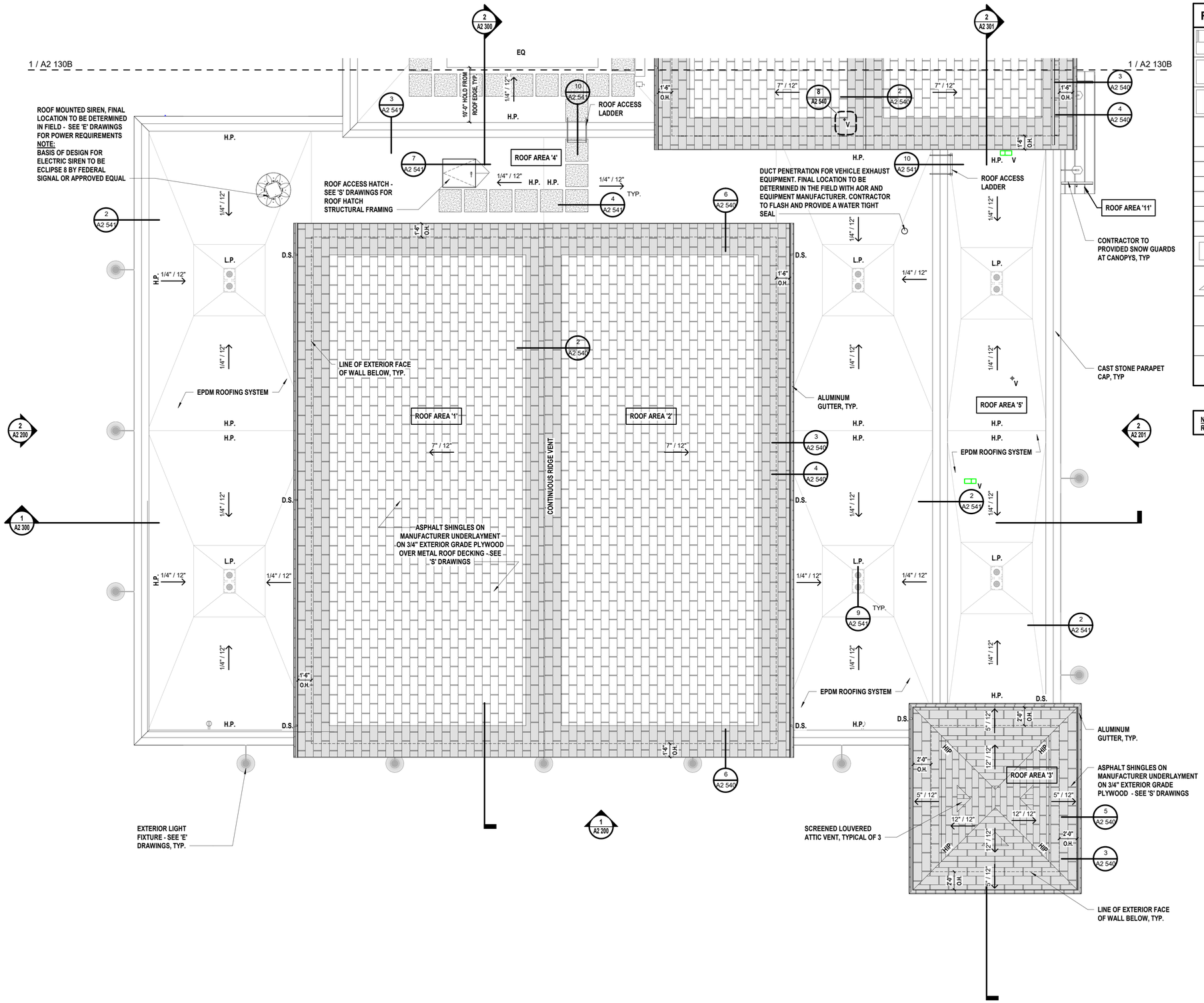

1 Partial Roof Plan
SCALE: 3/16" = 1'-0"

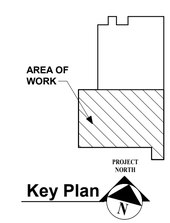

Key Plan

ROOF PLAN LEGEND

	INDICATES AREA OF ASHPALT SHINGLE ROOFING SYSTEM
	INDICATES AREA OF FLEECEBACK EPDM ROOFING SYSTEM - PROVIDE MINIMUM 1/4":12" SLOPE TOWARDS ROOF DRAINS
	INDICATES AREA OF STANDING SEAM METAL ROOFING SYSTEM
	INDICATES AREA OF 2x2 WALKWAY PADS - CONTRACTOR TO VERIFY QUANITITY REQUIRED AND FINAL LOCATIONS WITH EQUIPMENT
L.P.	INDICATES RELATIVE LOW POINTS
H.P.	INDICATES RELATIVE HIGH POINTS
X" : 12"	INDICATES SLOPE DIRECTION OF ROOF
D.S.	INDICATES DOWNSPOUT LOCATIONS
V	INDICATES VENT PENETRATIONS
	INDICATES LOCATION OF ROOF DRAINS WITH OVERFLOW DRAINS - SEE 'P' DRAWINGS FOR ADDITIONAL INFORMATION
	INDICATES LOCATION OF ROOF CRICKETS - PROVIDE MINIMUM 1/4":12" SLOPE TOWARDS ROOF DRAINS
	INDICATES LOCATION OF ROOF ACCESS HATCH
	INDICATES ICE AND WATER SHIELD
EQ	INDICATES ROOFTOP EQUIPMENT - SEE 'M' DRAWINGS

NOTE:
REFER TO SHEET A2 130B FOR GENERAL ROOF PLAN NOTES.

H2M architects + engineers
538 Broad Hollow Road, 4th Floor East
Melville, NY 11747
631.756.8000 • www.h2m.com

CONSULTANTS:

MARK	DATE	DESCRIPTION

REGISTERED ARCHITECT ROBERT BEE 032389 STATE OF NEW YORK

*ALTERATION OF THIS DOCUMENT EXCEPT BY A LICENSED PROFESSIONAL IS ILLEGAL

DESIGNED BY:	DRAWN BY:	CHECKED BY:	REVIEWED BY:
KEM	JHG		
PROJECT No: VGFD2001	DATE: JULY 2022		SCALE: AS SHOWN

CLIENT
VAILS GATE FIRE DISTRICT

New Storage Building (Phase I)
New Fire Station (Phase II)

872 Blooming Grove Turnpike
New Windsor, NY 12553

CONTRACT
CONTRACT G
GENERAL CONSTRUCTION

STATUS
FINAL BID DOCUMENT

SHEET TITLE
ARCHITECTURE
PARTIAL ROOF PLAN
NEW FIRE STATION
PHASE 2

DRAWING No.
A2 130A.00

C:\Users\jguzman\Documents\VGFD2001_Central21_A_jguzman.rvt

7/19/2022 8:18:30 AM

GENERAL ROOF PLAN NOTES

1. THIS DRAWING SERVES AS PART OF THE GRAPHICAL REPRESENTATION OF THE INTENDED SCOPE OF THE WORK, AND CONSTITUTE ONE PORTION OF THE CONSTRUCTION DOCUMENTS. THE CONTRACTOR SHALL BE RESPONSIBLE FOR COORDINATION BETWEEN ROOF DRAWINGS, ALL OTHER DRAWINGS AND THE SPECIFICATIONS.
2. ALL ROOFING MANUFACTURER REQUIREMENTS INCLUDING BUT NOT LIMITED TO PERTINENT PORTIONS OF THEIR SPECIFICATIONS, GENERAL REQUIREMENTS, DETAILS, AND RECOMMENDATIONS APPLY TO THIS WORK AS FULLY AS THOUGH PROVIDED HEREWITHIN IN ORDER TO PROVIDE A COMPLETE, WEATHER TIGHT AND WARRANTEED INSTALLATION.
3. THE INTENDED SCOPE OF THE WORK INCLUDES THREE NEW ROOFING SYSTEMS: THE COMPLETE INSTALLATION OF FLEECE BACK EPDM LOW SLOPE ROOF SYSTEM, STANDING SEAM METAL ROOF SYSTEM, AND AN ASPHALT SHINGLE SYSTEM AT MAIN ROOF, INCLUDING BUT NOT LIMITED TO ALL UNDERLAYMENTS, SHALL EXTEND THE FULL LENGTH ALONG ADJOINING VERTICAL SURFACES AS RECOMMENDED BY THE MANUFACTURER AND AS INDICATED ON DRAWINGS. THE CONTRACTOR SHALL BE RESPONSIBLE FOR PROVIDING ALL MATERIALS, LABOR, ROOFING ITEMS AND ACCESSORIES (REQUIRED FOR A COMPLETE AND FIRST-CLASS INSTALLATION) WHETHER OR NOT THEY ARE SPECIFICALLY INDICATED WITHIN THE CONTRACT DOCUMENTS.
4. ROOF ELEVATIONS, DIMENSIONS, AND LOCATIONS OF ROOF ELEMENTS INCLUDING BUT NOT LIMITED TO VENTS, AND FANS ARE APPROXIMATE. DO NOT SCALE. CONTRACTOR MUST VERIFY ALL IN FIELD AND MAKE ADJUSTMENTS TO WORK AS NECESSARY.
5. COORDINATE THE WORK REQUIRED ON THIS DRAWING WITH ALL STRUCTURAL, ARCHITECTURAL, MECHANICAL, ELECTRICAL, AND PLUMBING DRAWINGS AND SPECIFICATIONS.
6. CONTRACTOR SHALL PROVIDE ADEQUATE TEMPORARY DRAINAGE FOR ALL PORTIONS OF THE ROOF, THROUGHOUT THE ENTIRE DURATION OF THE PROJECT.
7. PROVIDE MINIMUM ROOF PITCH AS INDICATED ON PLANS.
8. ALL VENTS SHALL TERMINATE A MINIMUM OF 18" ABOVE THE ROOF, TYPICAL.
9. ROOFS AND ROOF COVERINGS SHALL BE OF MATERIALS THAT ARE COMPATIBLE WITH EACH OTHER AND WITH THE CONSTRUCTION TO WHICH THEY ARE APPLIED.
10. ROOF COVERING MATERIALS SHALL BE DELIVERED IN PACKAGES BEARING THE MANUFACTURER'S IDENTIFYING MARKS AND APPROVED TESTING AGENCY LABELS, AS PER BCNYS 2020.
11. PROVIDE SPLASH BLOCK WHERE DOWN SPOUTS MEET FLAT ROOF AREAS.
12. COORDINATE AND VERIFY EXACT LOCATIONS OF PENETRATIONS TO BE MADE IN ALL ROOFS AND ROOF ASSEMBLIES.
13. CONTRACTOR SHALL REVIEW, COORDINATE, AND INSTALL SLEEVES AND LOCATE ALL MECHANICAL PENETRATIONS REQUIRED TO ACCOMODATE ALL WORK DETAILED OR SPECIFIED.
14. CONTRACTOR IS RESPONSIBLE TO MAKE AND PROPERLY FLASH ALL ROOF PENETRATIONS. THE CONTRACTOR IS RESPONSIBLE FOR PROVIDING AND INSTALLING ALL FLASHING FOR ALL ROOF PENETRATIONS IN ACCORDANCE WITH ROOFING MANUFACTURER'S WARRANT REQUIREMENTS AND SPECIFICATIONS U.N.O.
15. CONTRACTOR SHALL PROVIDE ALL TEMPORARY ROOF FLASHING WORK AS REQUIRED. IT IS THE RESPONSIBILITY OF THE CONTRACTOR TO MAINTAIN A WEATHER TIGHT ROOF AT ALL TIMES.
16. PROVIDE CIRCKETS BEHIND ALL ROOFING ITEMS TO PROVIDE PITCH AND PREVENT PONDING. MODIFY AREAS OF WORK AS NECESSARY TO KEEP POSITIVE DRAINAGE.
17. CONTRACTOR SHALL FURNISH AND INSTALL CURBS FOR ALL MECHANICAL EQUIPMENT TO BE INSTALLED ON THE ROOF.
18. ROOFING INSTALLATION SHALL SHALL INCLUDE PROVIDING ALL PENETRATIONS FOR ALL ITEMS NECESSARY WHETHER SHOWN OR NOT, AND SHALL ALSO INCLUDE TERMINATIONS AND FLASHING AS REQUIRED TO PROVIDE WARRANTEED SYSTEMS IN ACCORDANCE WITH THE SPECIFIED WARRANTY REQUIREMENTS.
19. CONTRACTOR IS RESPONSIBLE FOR ALL DAMAGES TO THE INTERIOR AND EXTERIOR OF THE BUILDING THAT RESULTED FROM AND DURING ROOFING INSTALLATION, UNCLUDING BUT NOT LIMITED TO, ADHESIVE DRIPPINGS, WATER LEAKS, ETC.
20. PROVIDE ICE AND WATER SHIELD AT ALL ROOF EAVES, EXTENDING FROM LOWEST EDGE OF ROOF SURFACE TO A POINT 24" FROM THE INSIDE FACE OF THE EXTERIOR WALL.
21. ROOFING TAPER AT FLAT ROOF AREAS ON PLANS IS APPROXIMATE. CONTRACTOR SHALL COORDINATE ACTUAL TAPER WITH ROOFING MANUFACTURER AND PROVIDE SHOP DRAWINGS SUBMITTAL TO ARCHITECT FOR REVIEW. CONTRACTOR TO COORDINATE INSULATION WITH ROOFING DETAILS. PROVIDE A MINIMUM OF R-30 INSULATION. ROOF PITCH MUST BE INDICATED AND PROVIDE POSITIVE ROOF DRAINAGE AT 1/4" PER FOOT MINIMUM TO DRAINS.

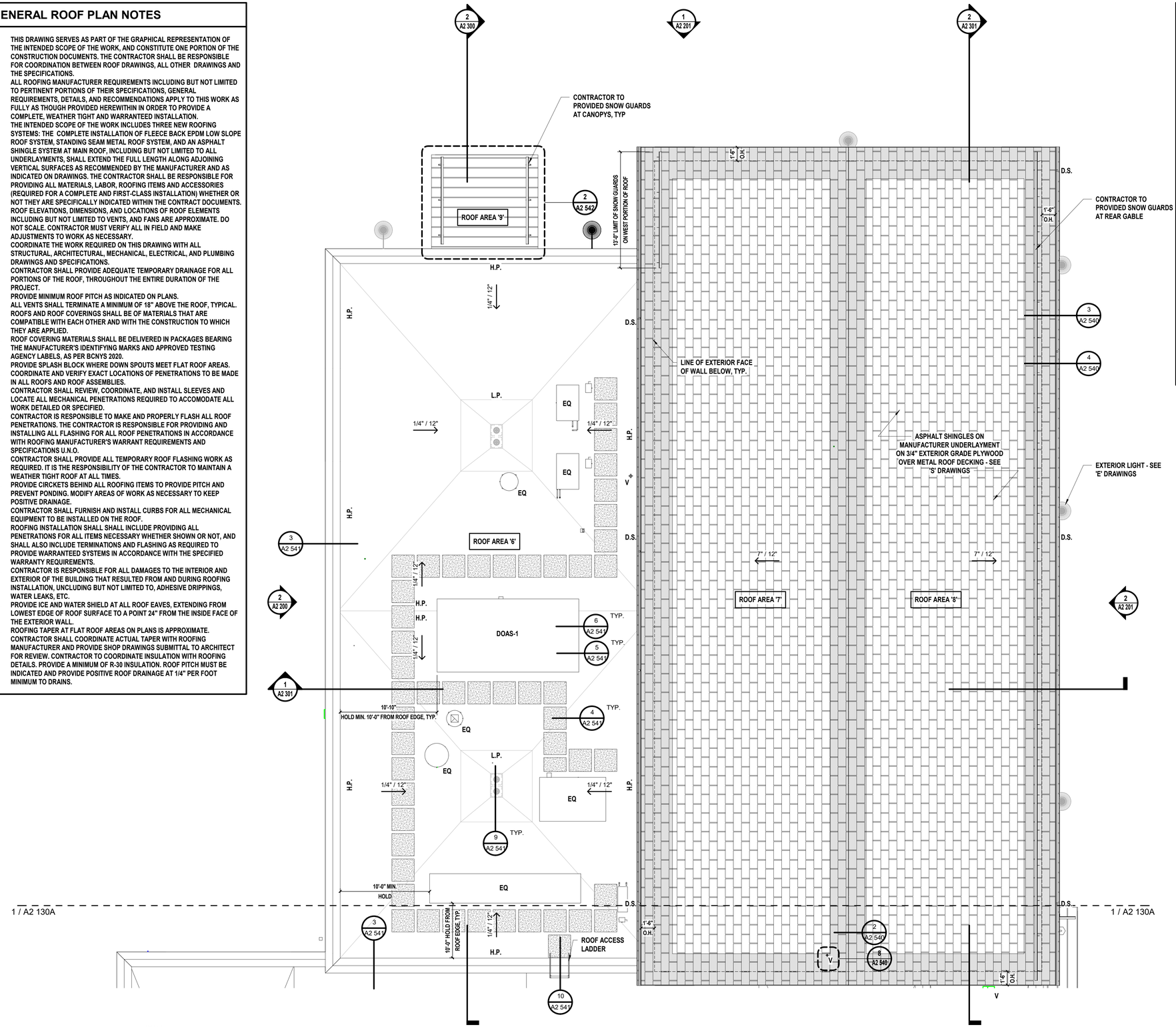

1 Partial Roof Plan
SCALE: 3/16" = 1'-0"

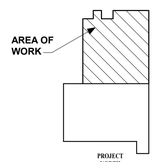

Key Plan

ROOF PLAN LEGEND

	INDICATES AREA OF ASHPALT SHINGLE ROOFING SYSTEM
	INDICATES AREA OF FLEECEBACK EPDM ROOFING SYSTEM - PROVIDE MINIMUM 1/4":12" SLOPE TOWARDS ROOF DRAINS
	INDICATES AREA OF STANDING SEAM METAL ROOFING SYSTEM
	INDICATES AREA OF 2x2 WALKWAY PADS - CONTRACTOR TO VERIFY QUANITITY REQUIRED AND FINAL LOCATIONS WITH EQUIPMENT
L.P.	INDICATES RELATIVE LOW POINTS
H.P.	INDICATES RELATIVE HIGH POINTS
X" : 12"	INDICATES SLOPE DIRECTION OF ROOF
D.S.	INDICATES DOWNSPOUT LOCATIONS
V	INDICATES VENT PENETRATIONS
	INDICATES LOCATION OF ROOF DRAINS WITH OVERFLOW DRAINS - SEE 'P' DRAWINGS FOR ADDITIONAL INFORMATION
	INDICATES LOCATION OF ROOF CRICKETS - PROVIDE MINIMUM 1/4":12" SLOPE TOWARDS ROOF DRAINS
	INDICATES LOCATION OF ROOF ACCESS HATCH
	INDICATES ICE AND WATER SHIELD
EQ	INDICATES ROOFTOP EQUIPMENT - SEE 'M' DRAWINGS

H2M architects + engineers
538 Broad Hollow Road, 4th Floor East
Melville, NY 11747
631.756.8000 • www.h2m.com

CONSULTANTS:

MARK	DATE	DESCRIPTION

REGISTERED ARCHITECT ROBERT BEE 032389 STATE OF NEW YORK

*ALTERATION OF THIS DOCUMENT EXCEPT BY A LICENSED PROFESSIONAL IS ILLEGAL

DESIGNED BY:	DRAWN BY:	CHECKED BY:	REVIEWED BY:
KEM	JHG		
PROJECT No: VGFD2001	DATE: JULY 2022		SCALE: AS SHOWN

CLIENT
VAILS GATE FIRE DISTRICT

New Storage Building (Phase I)
New Fire Station (Phase II)

872 Blooming Grove Turnpike
New Windsor, NY 12553

CONTRACT
CONTRACT G
GENERAL CONSTRUCTION

STATUS
FINAL BID DOCUMENT

SHEET TITLE
ARCHITECTURE
PARTIAL ROOF PLAN
NEW FIRE STATION
PHASE 2

DRAWING No.
A2 130B.00

C:\Users\jguzman\Documents\VGFD2001_Central21_A_jguzman.rvt
7/18/2022 8:18:43 AM

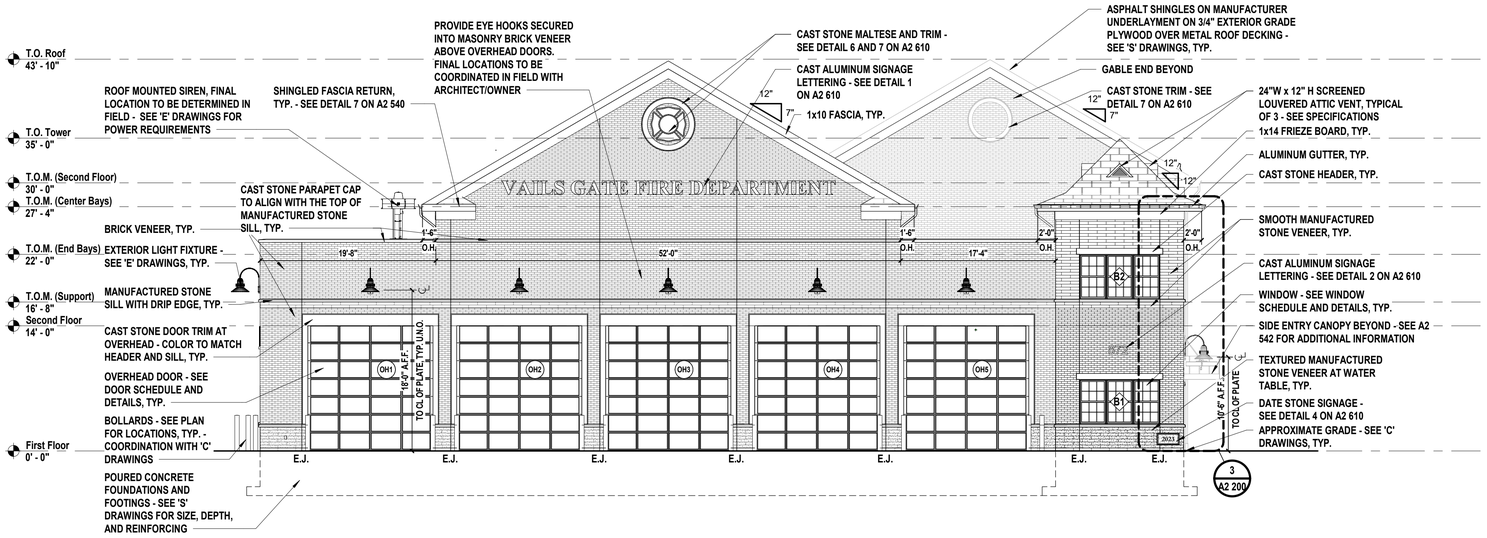

1 South Elevation

SCALE: 1/8" = 1'-0"

GENERAL ELEVATION NOTES

1. COORDINATE THE WORK INDICATED HERE WITH ALL CONTRACT DOCUMENTS AND SPECIFICATIONS.
2. ALL PAINTING SHALL BE PERFORMED IN ACCORDANCE WITH THE REQUIREMENTS CONTAINED IN SECTION 099000 OF THE PROJECT MANUAL.
3. FOOTING AND FOUNDATION DEPTHS, SIZES, ETC. PROVIDED IN ELEVATIONS ARE FOR DIAGRAMMATIC PURPOSES ONLY. SEE 'S' DRAWINGS FOR ACTUAL INFORMATION.
4. CONTRACTOR TO PROVIDE WEATHER RESISTANT REQUIRED PIPE PENETRATIONS, INCLUDING BUT NOT LIMITED TO WALL HYDRANTS, HOSES BIBS, AND ELECTRICAL CONDUITS THROUGH EXTERIOR WALLS. COORDINATE ALL LOCATIONS WITH CONTRACT DOCUMENTS AND SPECIFICATIONS.
5. CONTRACTOR TO PROVIDE STAINLESS STEEL HOOKS FOR BUNTING AS PER SPECIFICATION SECTION 055000 OVER OVERHEAD DOORS. LOCATIONS TO BE COORDINATED IN THE FIELD WITH OWNER AND ARCHITECT.

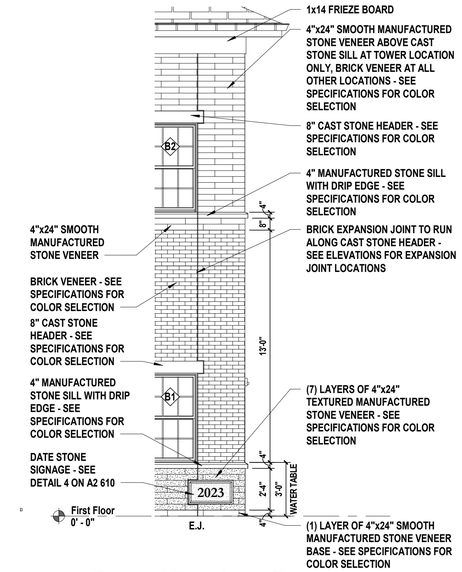

3 Enlarged Elevation at Tower

SCALE: 1/4" = 1'-0"

NOTE:
WATER TABLE COMPOSITION TYPICAL AROUND ENTIRE BUILDING

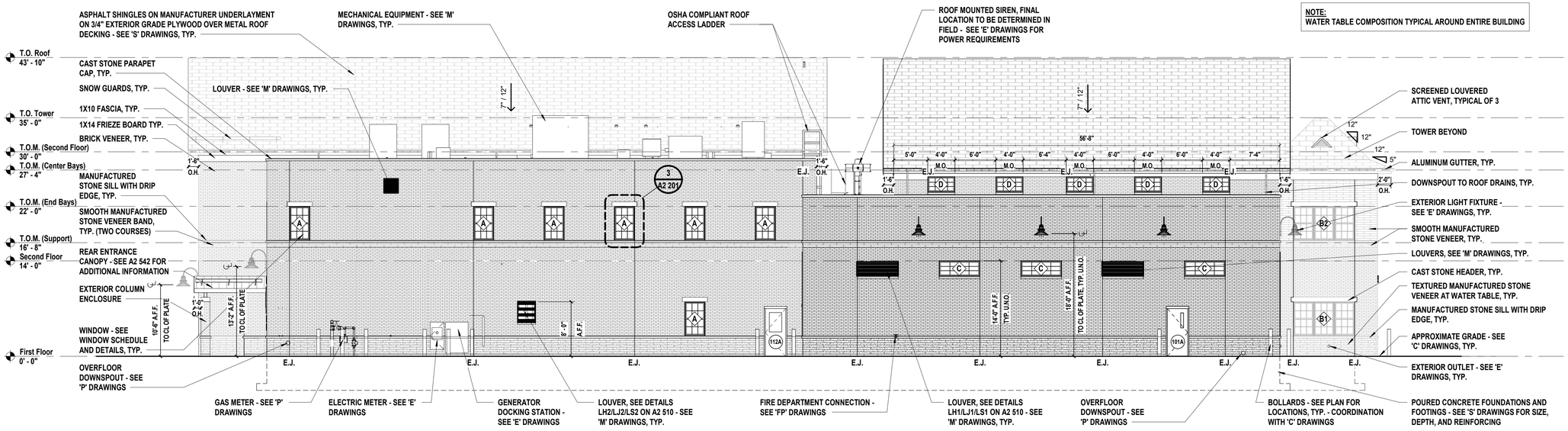

2 West Elevation

SCALE: 1/8" = 1'-0"

H2M architects + engineers
538 Broad Hollow Road, 4th Floor East
Melville, NY 11747
631.756.8000 • www.h2m.com

CONSULTANTS:

MARK	DATE	DESCRIPTION

REGISTERED ARCHITECT ROBERT BEE 032389 STATE OF NEW YORK

*ALTERATION OF THIS DOCUMENT EXCEPT BY A LICENSED PROFESSIONAL IS ILLEGAL

DESIGNED BY:	DRAWN BY:	CHECKED BY:	REVIEWED BY:
KEM	JHG		
PROJECT No: VGFD2001	DATE: JULY 2022		SCALE: AS SHOWN

CLIENT

VAILS GATE FIRE DISTRICT

New Storage Building (Phase I)
New Fire Station (Phase II)

872 Blooming Grove Turnpike
New Windsor, NY 12553

CONTRACT

CONTRACT G
GENERAL CONSTRUCTION

STATUS

FINAL BID DOCUMENT

SHEET TITLE

ARCHITECTURE
EXTERIOR BUILDING ELEVATIONS
NEW FIRE STATION
PHASE 2

DRAWING No.

A2 200.00

C:\Users\jguzman\Documents\VGFD2001_Central21_A_jguzman.rvt

7/18/2022 8:32:49 AM

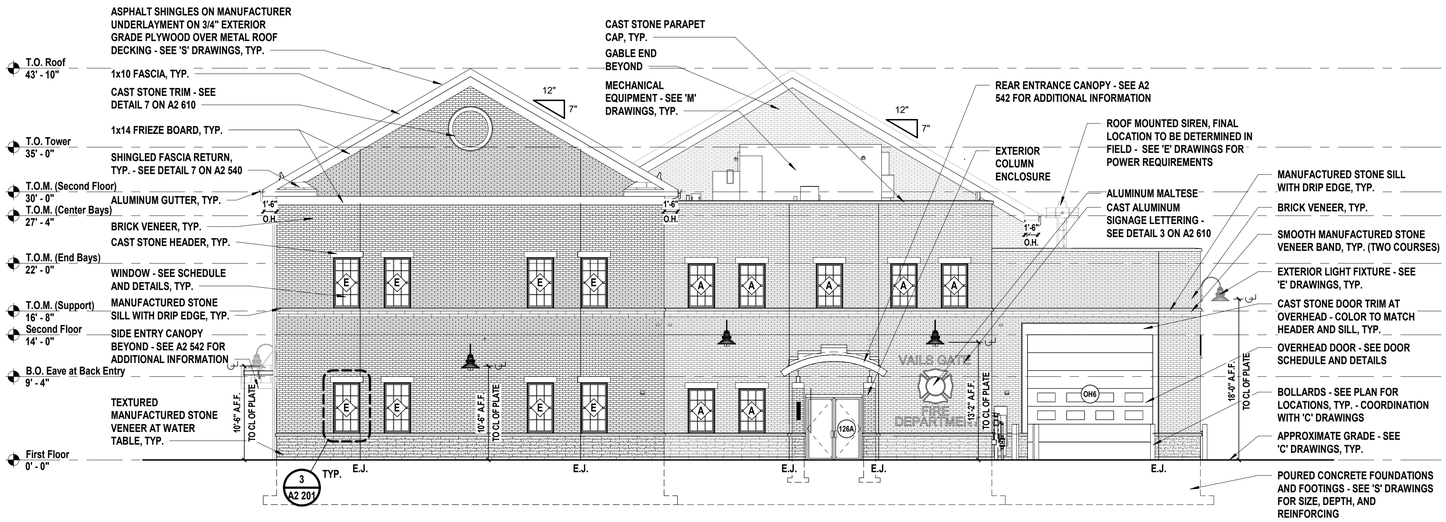

1 North Elevation

SCALE: 1/8" = 1'-0"

GENERAL ELEVATION NOTES

1. COORDINATE THE WORK INDICATED HERE WITH ALL CONTRACT DOCUMENTS AND SPECIFICATIONS.
2. ALL PAINTING SHALL BE PERFORMED IN ACCORDANCE WITH THE REQUIREMENTS CONTAINED IN SECTION 099000 OF THE PROJECT MANUAL.
3. FOOTING AND FOUNDATION DEPTHS, SIZES, ETC. PROVIDED IN ELEVATIONS ARE FOR DIAGRAMMATIC PURPOSES ONLY. SEE 'S' DRAWINGS FOR ACTUAL INFORMATION.
4. CONTRACTOR TO PROVIDE WEATHER RESISTANT REQUIRED PIPE PENETRATIONS, INCLUDING BUT NOT LIMITED TO WALL HYDRANTS, HOSES BIBS, AND ELECTRICAL CONDUITS THROUGH EXTERIOR WALLS. COORDINATE ALL LOCATIONS WITH CONTRACT DOCUMENTS AND SPECIFICATIONS.
5. CONTRACTOR TO PROVIDE STAINLESS STEEL HOOKS FOR BUNTING AS PER SPECIFICATION SECTION 055000 OVER OVERHEAD DOORS. LOCATIONS TO BE COORDINATED IN THE FIELD WITH OWNER AND ARCHITECT.

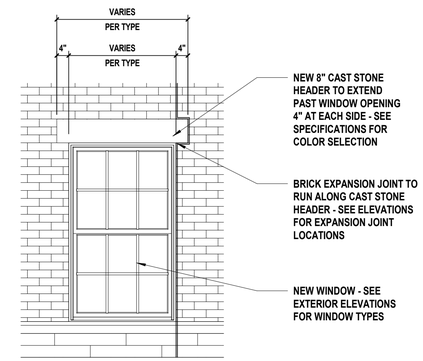

3 Typical Window Header

SCALE: 1/2" = 1'-0"

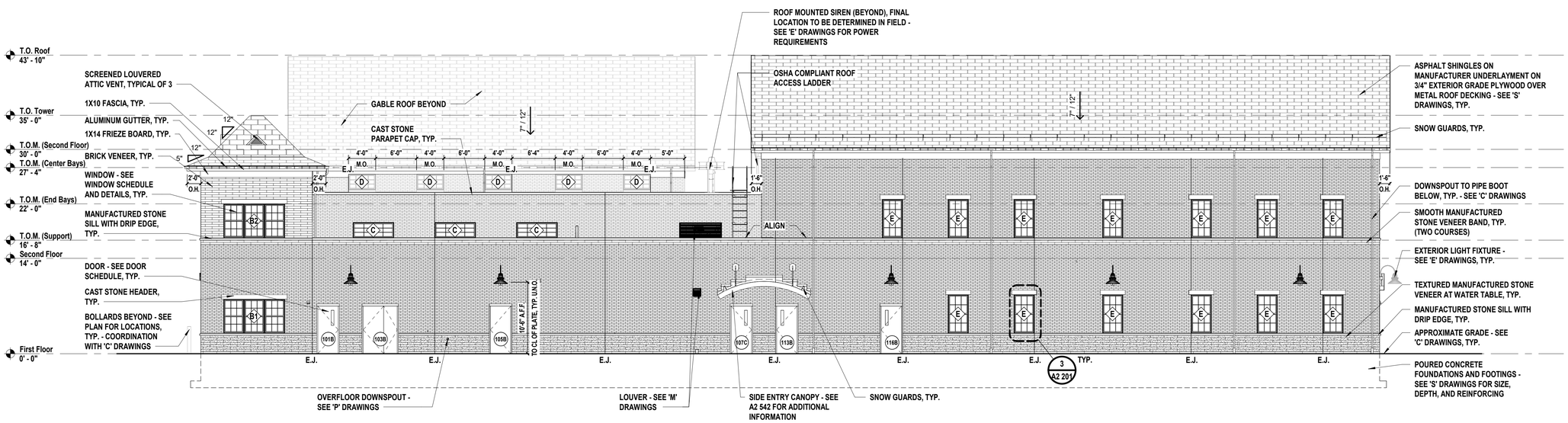

2 East Elevation

SCALE: 1/8" = 1'-0"

H2M architects + engineers
538 Broad Hollow Road, 4th Floor East
Melville, NY 11747
631.756.8000 • www.h2m.com

CONSULTANTS:

MARK	DATE	DESCRIPTION

REGISTERED ARCHITECT ROBERT BEE 032389 STATE OF NEW YORK

*ALTERATION OF THIS DOCUMENT EXCEPT BY A LICENSED PROFESSIONAL IS ILLEGAL.

DESIGNED BY:	DRAWN BY:	CHECKED BY:	REVIEWED BY:
KEM	JHG		

PROJECT No:	DATE:	SCALE:
VGFD2001	JULY 2022	AS SHOWN

CLIENT

VAILS GATE FIRE DISTRICT

New Storage Building (Phase I)
New Fire Station (Phase II)

872 Blooming Grove Turnpike
New Windsor, NY 12553

CONTRACT

CONTRACT G
GENERAL CONSTRUCTION

STATUS

FINAL BID DOCUMENT

SHEET TITLE

ARCHITECTURE
EXTERIOR BUILDING ELEVATIONS
NEW FIRE STATION
PHASE 2

DRAWING No.

A2 201.00

C:\Users\jgazman\Documents\VGFD2001_Central21_A_jgazman.rvt

7/18/2022 8:19:15 AM

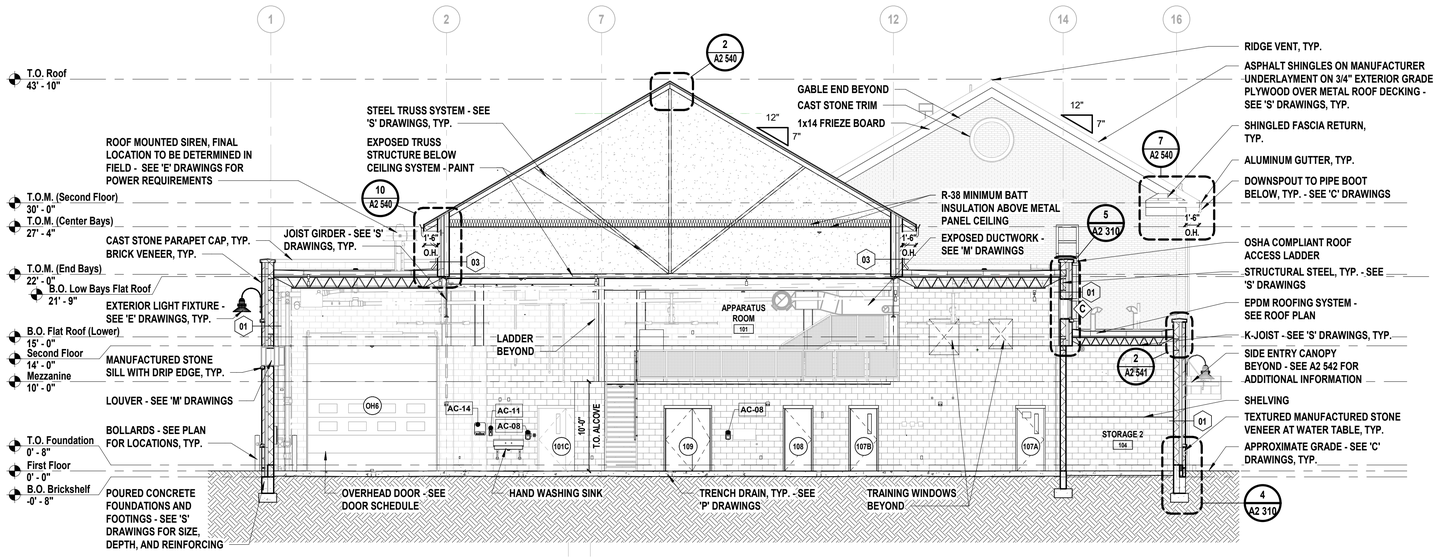

1 Building Section

SCALE: 1/8" = 1'-0"

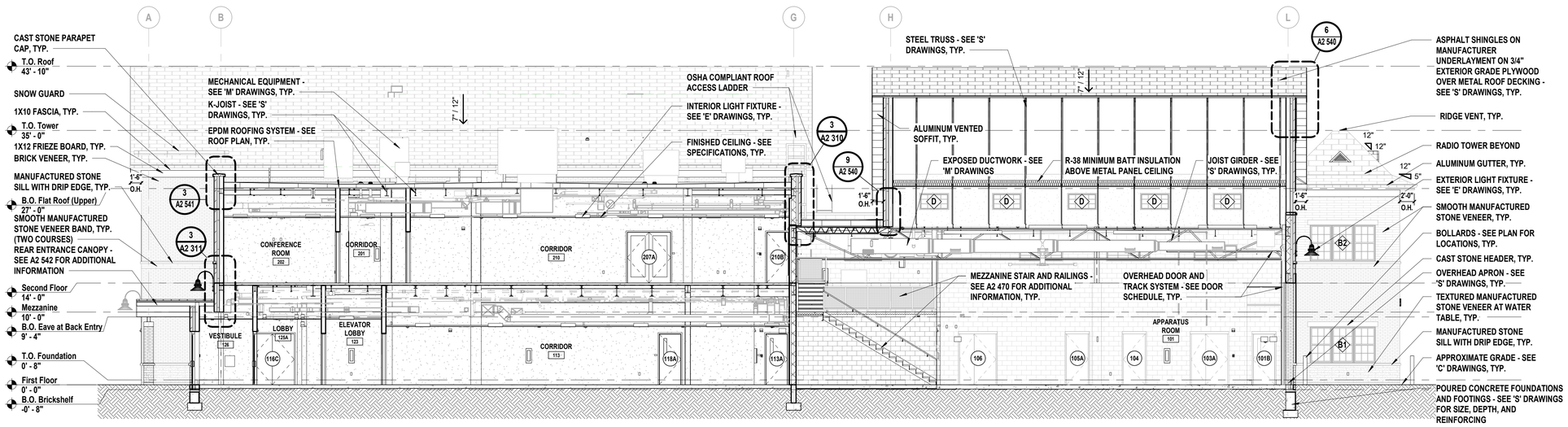

2 Building Section

SCALE: 1/8" = 1'-0"

H2M architects + engineers

538 Broad Hollow Road, 4th Floor East
Melville, NY 11747
631.756.8000 • www.h2m.com

CONSULTANTS:

MARK	DATE	DESCRIPTION

REGISTERED ARCHITECT ROBERT BEE 032389 STATE OF NEW YORK

*ALTERATION OF THIS DOCUMENT EXCEPT BY A LICENSED PROFESSIONAL IS ILLEGAL.

DESIGNED BY:	DRAWN BY:	CHECKED BY:	REVIEWED BY:
KEM	JHG		

PROJECT No:	DATE:	SCALE:
VGFD2001	JULY 2022	AS SHOWN

CLIENT

VAILS GATE FIRE DISTRICT

New Storage Building (Phase I)
New Fire Station (Phase II)

872 Blooming Grove Turnpike
New Windsor, NY 12553

CONTRACT

CONTRACT G
GENERAL CONSTRUCTION

STATUS

FINAL BID DOCUMENT

SHEET TITLE

ARCHITECTURE
BUILDING SECTIONS
NEW FIRE STATION
PHASE 2

DRAWING No.

A2 300.00

C:\Users\jgazman\Documents\VGFD2001_Central21_A_jgazman.rvt

7/18/2022 8:19:30 AM

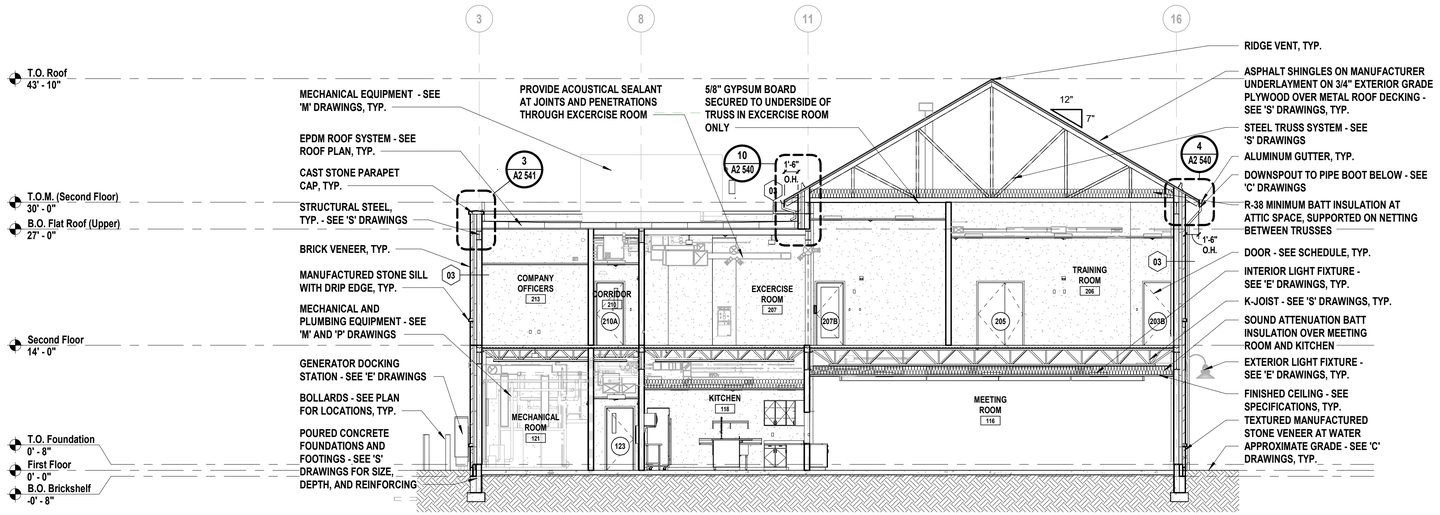

1 Building Section

SCALE: 1/8" = 1'-0"

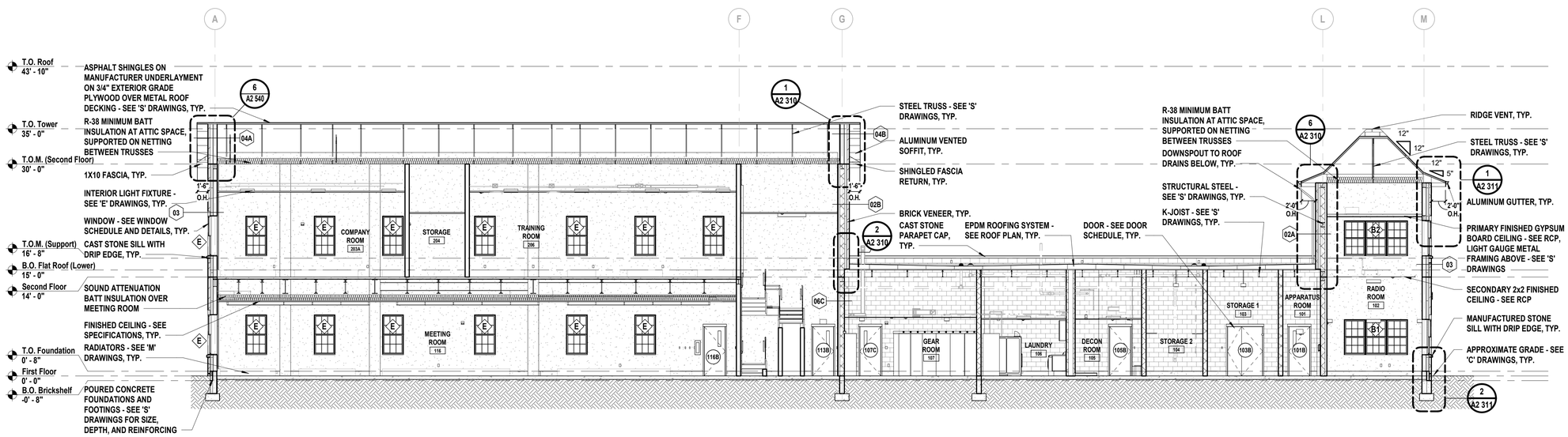

2 Building Section

SCALE: 1/8" = 1'-0"

H 2 M architects + engineers

538 Broad Hollow Road, 4th Floor East
Melville, NY 11747
631.756.8000 • www.h2m.com

CONSULTANTS:

MARK	DATE	DESCRIPTION

REGISTERED ARCHITECT ROBERT BEE 022389 STATE OF NEW YORK

*ALTERATION OF THIS DOCUMENT EXCEPT BY A LICENSED PROFESSIONAL IS ILLEGAL.

DESIGNED BY:	DRAWN BY:	CHECKED BY:	REVIEWED BY:
KEM	JHG		
PROJECT No: VGFD2001	DATE: JULY 2022		SCALE: AS SHOWN

CLIENT

VAILS GATE FIRE DISTRICT

New Storage Building (Phase I)
New Fire Station (Phase II)

872 Blooming Grove Turnpike
New Windsor, NY 12553

CONTRACT

CONTRACT G
GENERAL CONSTRUCTION

STATUS

FINAL BID DOCUMENT

SHEET TITLE

ARCHITECTURE
BUILDING SECTIONS
NEW FIRE STATION
PHASE 2

DRAWING No.

A2 301.00

C:\Users\jgazman\Documents\VGFD2001_Central21_A_jgazman.rvt

7/18/2022 8:19:37 AM

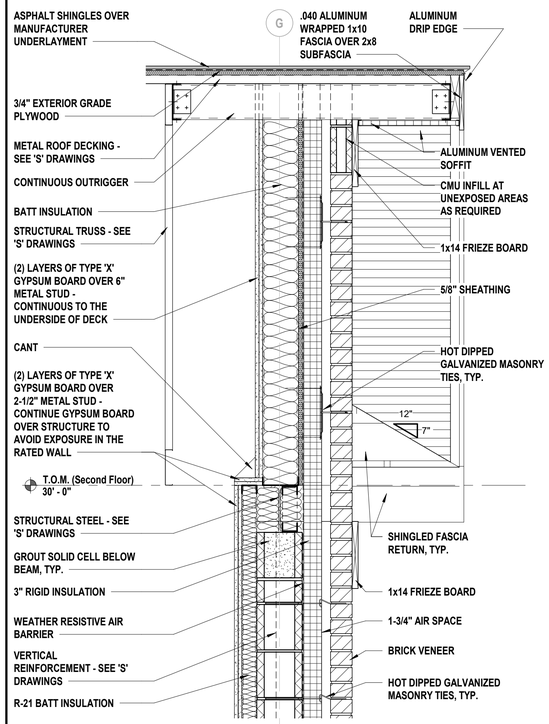

1 Wall Section at F.R. Gable

SCALE: 1" = 1'-0"

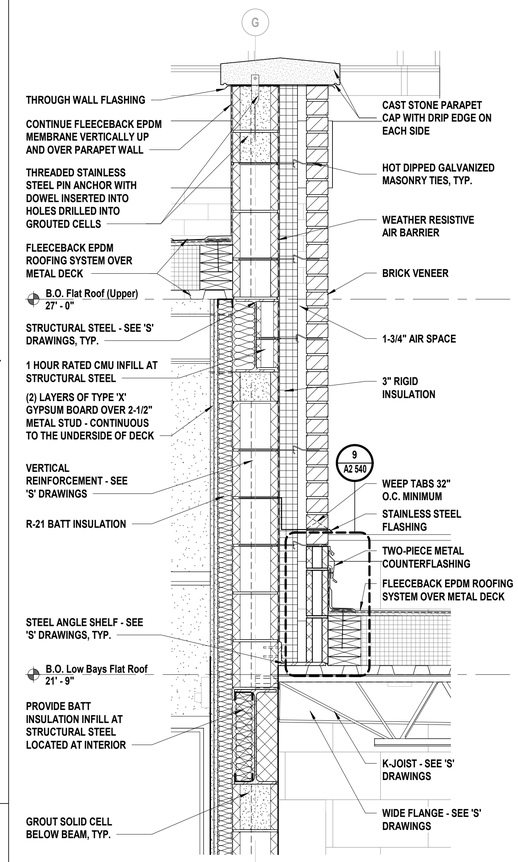

3 Wall Section at F.R. Wall

SCALE: 1" = 1'-0"

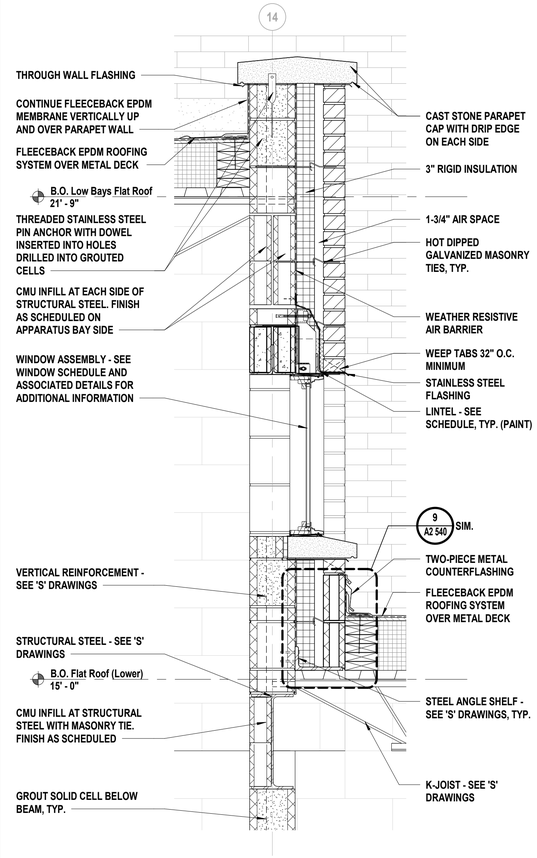

5 Wall Section

SCALE: 1" = 1'-0"

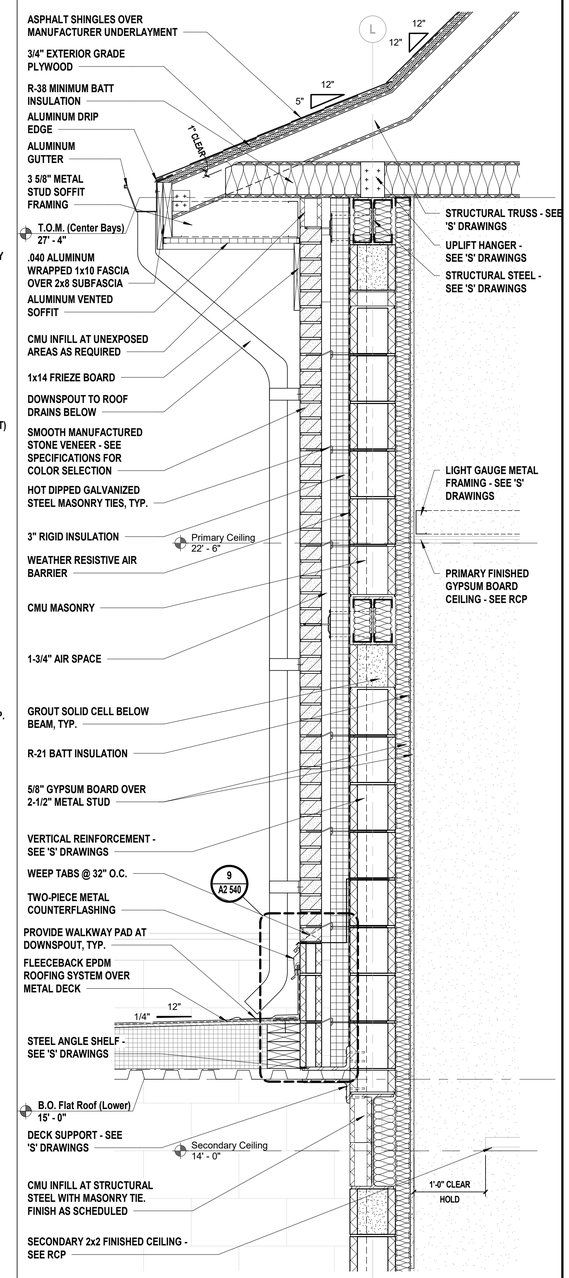

6 Wall Section at Tower Masonry Wall

SCALE: 1" = 1'-0"

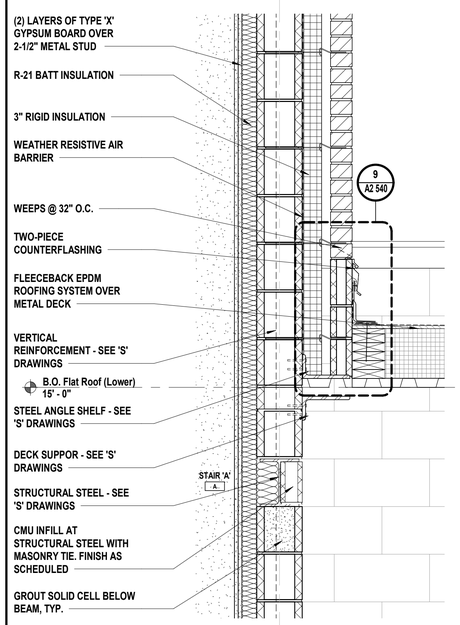

2 Wall Section at F.R. Wall

SCALE: 1" = 1'-0"

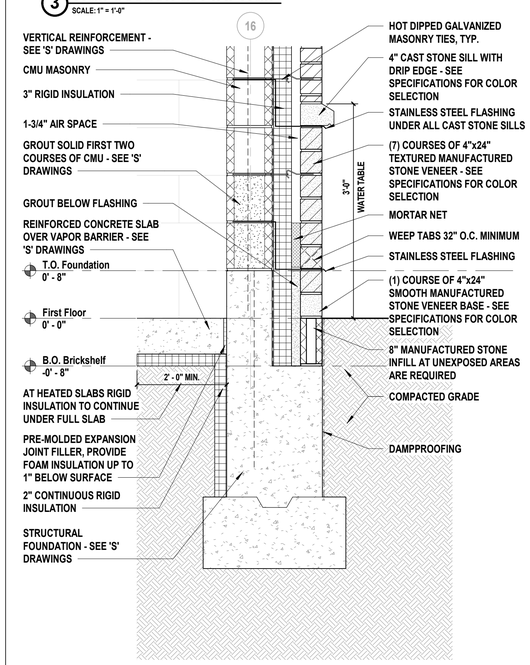

4 Typical Foundation Detail at Masonry Wall

SCALE: 1" = 1'-0"

C:\Users\jguzman\Documents\VGFD2001_Central21_A_jguzman.rvt

7/18/2022 8:19:42 AM

H2M architects + engineers

538 Broad Hollow Road, 4th Floor East
Melville, NY 11747
631.756.8000 • www.h2m.com

CONSULTANTS:

MARK	DATE	DESCRIPTION

REGISTERED ARCHITECT ROBERT BEE 032389 STATE OF NEW YORK

*ALTERATION OF THIS DOCUMENT EXCEPT BY A LICENSED PROFESSIONAL IS ILLEGAL.

DESIGNED BY:	DRAWN BY:	CHECKED BY:	REVIEWED BY:
KEM	JHG		
PROJECT No: VGFD2001	DATE: JULY 2022		SCALE: AS SHOWN

CLIENT

VAILS GATE FIRE DISTRICT

New Storage Building (Phase I)
New Fire Station (Phase II)

872 Blooming Grove Turnpike
New Windsor, NY 12553

CONTRACT

CONTRACT G
GENERAL CONSTRUCTION

STATUS

FINAL BID DOCUMENT

SHEET TITLE

ARCHITECTURE
MASONRY WALL SECTIONS AND DETAILS
NEW FIRE STATION
PHASE 2

DRAWING No.

A2 310.00

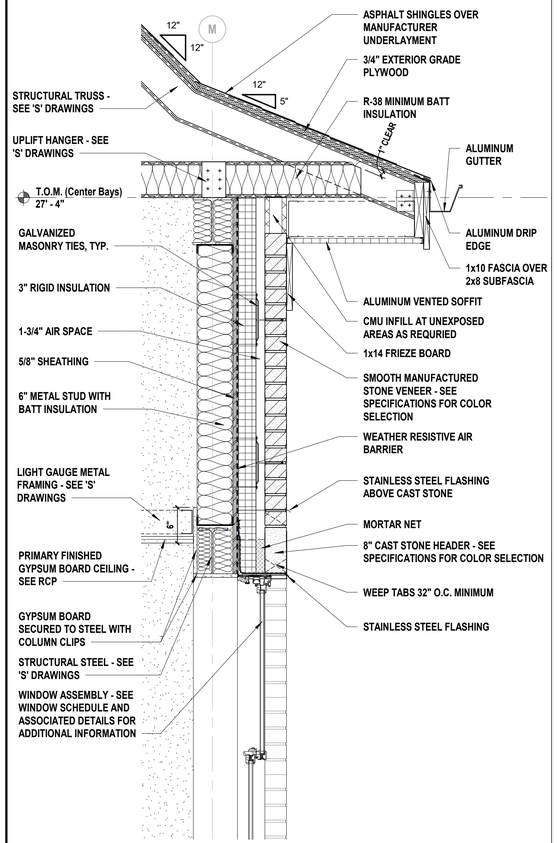

1 Wall Section at Tower Metal Stud Wall

SCALE: 1" = 1'-0"

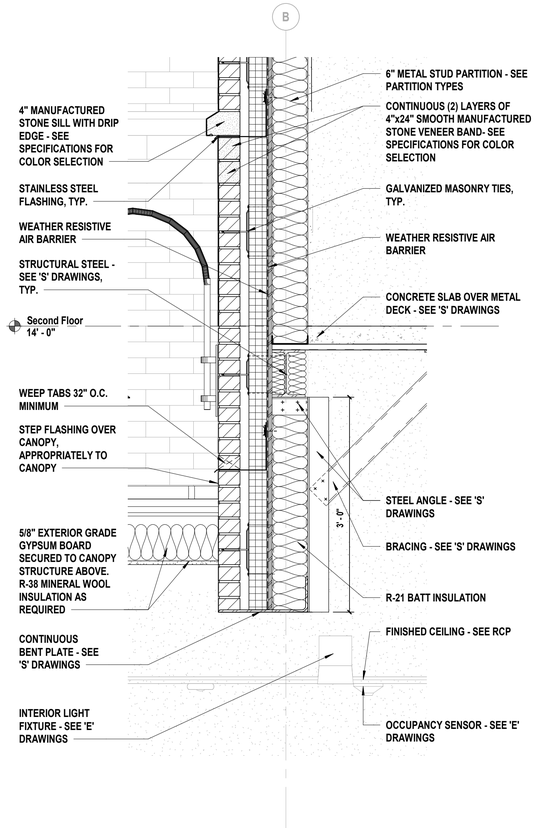

3 Wall Section at Rear Entry

SCALE: 1" = 1'-0"

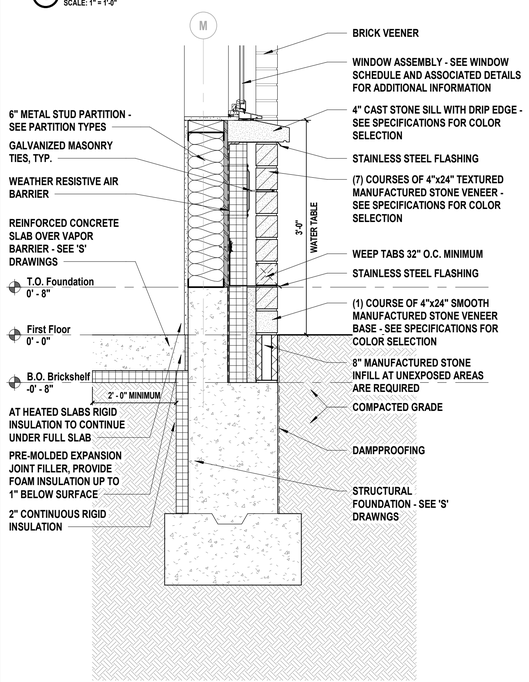

2 Typical Foundation Detail at Metal Stud Wall

SCALE: 1" = 1'-0"

C:\Users\jguzman\Documents\VGFD2001_Central21_A_jguzman.rvt

7/18/2022 8:19:44 AM

H 2 M architects + engineers

538 Broad Hollow Road, 4th Floor East
Melville, NY 11747
631.756.8000 • www.h2m.com

CONSULTANTS:

MARK	DATE	DESCRIPTION

REGISTERED ARCHITECT ROBERT BEE 032389 STATE OF NEW YORK

*ALTERATION OF THIS DOCUMENT EXCEPT BY A LICENSED PROFESSIONAL IS ILLEGAL.

DESIGNED BY:	DRAWN BY:	CHECKED BY:	REVIEWED BY:
KEM	JHG		
PROJECT No: VGFD2001	DATE: JULY 2022		SCALE: AS SHOWN

CLIENT

VAILS GATE FIRE DISTRICT

New Storage Building (Phase I)
New Fire Station (Phase II)

872 Blooming Grove Turnpike
New Windsor, NY 12553

CONTRACT

CONTRACT G
GENERAL CONSTRUCTION

STATUS

FINAL BID DOCUMENT

SHEET TITLE

ARCHITECTURE
METAL STUD WALL SECTIONS AND DETAILS
NEW FIRE STATION
PHASE 2

DRAWING No.

A2 311.00

GENERAL RESTROOM NOTES

1. ALL PAINTING SHALL BE PERFORMED IN ACCORDANCE WITH THE REQUIREMENTS CONTAINED IN DIVISION 9 OF THE SPECIFICATIONS.
2. THIS DRAWING SERVES AS A GENERAL LIST OF FINISH ITEMS AND IS NOT A LIST OF ALL FINISH ITEMS WITHIN A ROOM OR SPACE. REFER TO ALL CONTRACT DRAWINGS AND SPECIFICATIONS TO DETERMINE ALL REQUIRED FINISHES AND FINISH ITEMS.
3. MAINTAIN SAME FINISHES AT ALL WALLS WITHIN RESTROOMS.
4. MOUNTING LOCATIONS OF RESTROOM FIXTURES TO BE REVIEWED AND APPROVED IN FIELD BY OWNER'S CONSTRUCTION REPRESENTATIVE.
5. SEE 'P' DRAWINGS FOR COORDINATION OF PLUMBING FIXTURES.
6. INSTALL METAL EDGE DRIP WHERE WALL TILE TRANSITIONS TO DIFFERENT FINISH.
7. SEE FINISH SCHEDULE ONA2 600 FOR ALL FINISHES.
8. ALL WALL TILE SHALL BE ONE (1) FULL TILE ABOVE THE CEILING (U.N.O.). COORDINATE WITH CEILING INSTALLER. (ADD ALTERNATE #4)

GENERAL ACCESSORY NOTES

1. ACCESSORIES PROVIDED IN THE TOILET ACCESSORY SCHEDULE REPRESENT THOSE TO BE INCLUDED IN ALL FINISHED SPACES.
2. PROVIDED SOLID BLOCKING IN WALLS FOR ALL TOILET ACCESSORIES.
3. CONTRACTOR MUST SUBMIT SHOP DRAWINGS OF LOCATIONS AND MOUNTING HEIGHTS OF ALL ACCESSORIES TO ARCHITECT FOR APPROVAL.
4. ALL WATER CLOSETS SHALL BE MOUNTED AT A MINIMUM OF 18" ON CENTER FROM FINISHED FACE OF ADJACENT WALLS AND/OR PARTITIONS.
5. ALL LAVATORIES SHALL BE MOUNTED AT A MINIMUM OF 15" ON CENTER FROM FINISHED FACE OF ADJACENT WALLS AND/OR PARTITIONS.
6. ALL URINALS SHALL BE MOUNTED A MINIMUM OF 15" ON CENTER FROM FINISHED FACE OF ADJACENT WALLS AND/OR PARTITIONS.
7. FOR ADDITIONAL INFORMATION, REFER TO MOUNTING HEIGHTS FOR TOILET ACCESSORIES, ON SHEET G 003 - G 006.
8. FOR ADDITIONAL INFORMATION, REFER TO PROJECT SPECIFICATIONS, SECTION 10 28 00.
9. PROVIDE ONE (1) URINAL AT ACCESSIBLE HEIGHT.

TOILET ACCESSORY SCHEDULE

MARK	DESCRIPTION	COMMENTS
AC-01	18" Accessible Grab Bar (Vertical)	
AC-02	36" Accessible Grab Bar (Horizontal)	
AC-03	42" Accessible Grab Bar (Horizontal)	
AC-04	Horizontal Two-Wall Bar for Shower Stall	
AC-05	Surface-Mounted Toilet Tissue Dispenser	
AC-06	Seat Cover Dispenser	
AC-07	Surface-Mounted Napkin Disposal	
AC-08	Automated Touchless Sanitizer Dispenser	
AC-09	24x36 Angle-Frame Mirror (ADA Compliant)	
AC-10	60x36 Angle-Frame Mirror (ADA Compliant)	
AC-11	Surface-Mounted Soap Dispenser	Provided by Owner, Installed by General Contractor
AC-12	Recessed Waste Receptacle	Provided by Owner, Installed by General Contractor
AC-13	Surface-Mounted Waste Receptacle	Provided by Owner, Installed by General Contractor
AC-14	Surface- Mounted Touchless Paper Towel Dispenser	
AC-15	Shower Curtain and Rod	Contractor to provide shower Curtain Hooks - See Specifications
AC-16	Towel / Robe Hook	
AC-17	Folding Reversible Shower Seat	
AC-18	Recessed Baby Changing Station	
AC-19	Two-Tier Louvered Locker	Provided by Owner, Installed by General Contractor
AC-20	ADA Compliant Bench	Provided by Owner, Installed by General Contractor
AC-21	Bench	Provided by Owner, Installed by General Contractor
AC-22	Utility Shelf , 4 Hooks, 3 Holders	

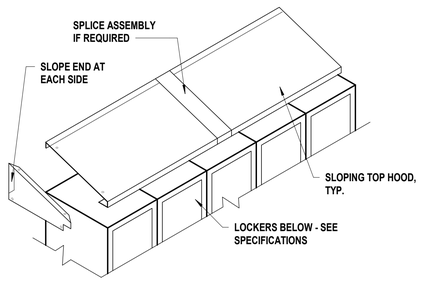

1 Sloped Hood at Lockers
SCALE: 6" = 1'-0"

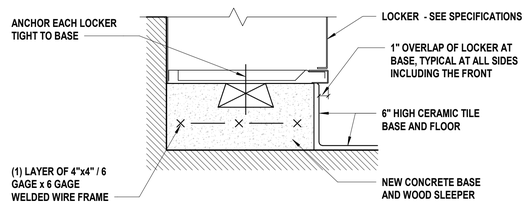

NOTE: THE GENERAL CONTRACTOR SHALL COORDINATE FINAL LAYOUT OF RECESSED LOCKER BASE WITH LOCKER LAYOUT DRAWING PROVIDED BY OTHERS AND APPROVED BY OWNER

2 Base Detail at Lockers
SCALE: 6" = 1'-0"

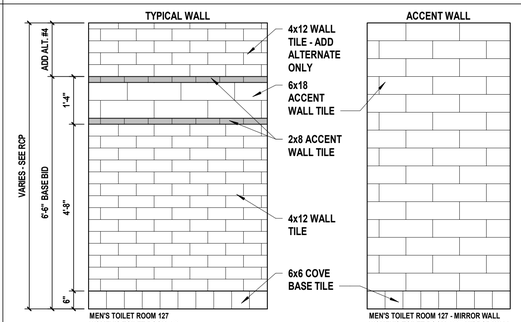

NOTE: COLOR TO BE SELECTED BY ARCHITECT / OWNER

3 Tile Elevations
SCALE: 1/2" = 1'-0"

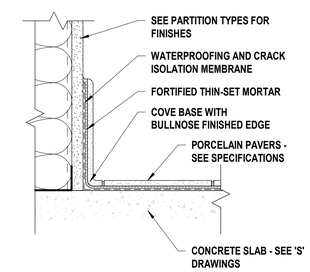

NOTE:
1. WATERPROOFING AND CRACK ISOLATION MEMBRANE TO OCCUR IN MEN'S TOILET ROOM 127, WOMEN'S TOILET ROOM 128, BATHROOMS 208 AND 209
2. CONTRACTOR TO INSTALL ALL REQUIRED ITEMS PER MANUFACTURERS REQUIREMENTS

4 Cove Base Detail
SCALE: 3" = 1'-0"

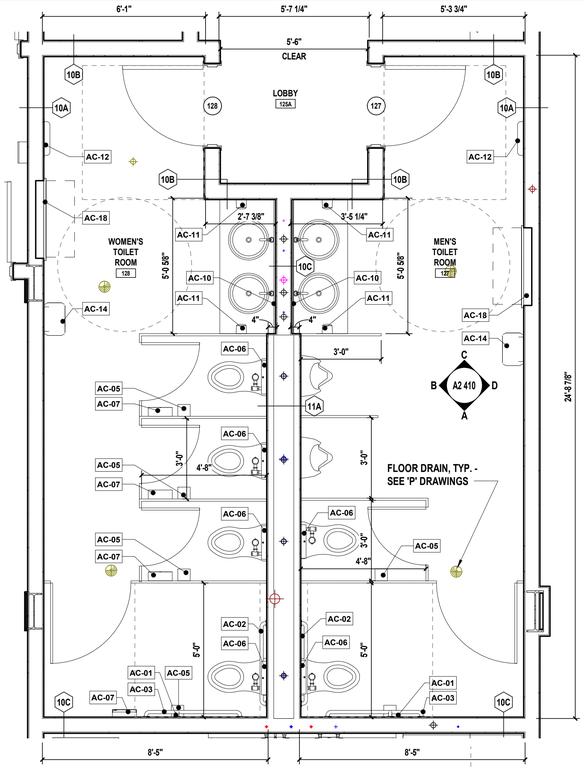

5 First Floor Enlarged Toilet Room 127 & 128
SCALE: 3/8" = 1'-0"

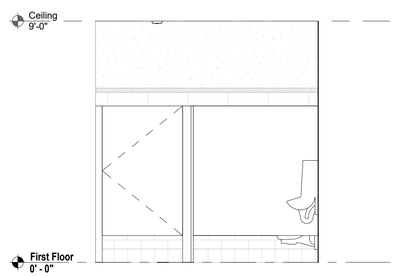

A Interior Elevation
SCALE: 3/8" = 1'-0"

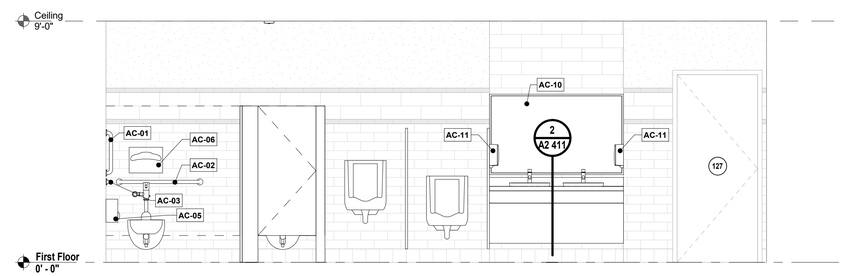

B Interior Elevation
SCALE: 3/8" = 1'-0"

NOTE:
SEE TILES ELEVATIONS ON THIS SHEET FOR WALL FINISHES

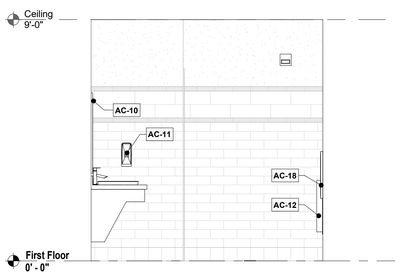

C Interior Elevation
SCALE: 3/8" = 1'-0"

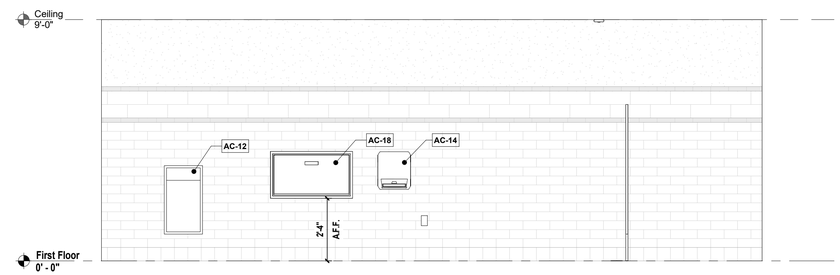

D Interior Elevation
SCALE: 3/8" = 1'-0"

H2M architects + engineers
538 Broad Hollow Road, 4th Floor East
Melville, NY 11747
631.756.8000 • www.h2m.com

CONSULTANTS:

MARK	DATE	DESCRIPTION

REGISTERED ARCHITECT ROBERT BEE 032389 STATE OF NEW YORK

*ALTERATION OF THIS DOCUMENT EXCEPT BY A LICENSED PROFESSIONAL IS ILLEGAL.

DESIGNED BY:	DRAWN BY:	CHECKED BY:	REVIEWED BY:
KEM	JHG		

PROJECT No:	DATE:	SCALE:
VGFD2001	JULY 2022	AS SHOWN

CLIENT
VAILS GATE FIRE DISTRICT

New Storage Building (Phase I)
New Fire Station (Phase II)

872 Blooming Grove Turnpike
New Windsor, NY 12553

CONTRACT
CONTRACT G
GENERAL CONSTRUCTION

STATUS
FINAL BID DOCUMENT

SHEET TITLE
ARCHITECTURE
ENLARGED TOILET PLANS, ELEVATIONS, NOTES AND DETAILS
NEW FIRE STATION
PHASE 2

DRAWING No.
A2 410.00

C:\Users\jguzman\Documents\VGFD2001_Central21_A_jguzman.rvt
7/18/2022 8:19:48 AM

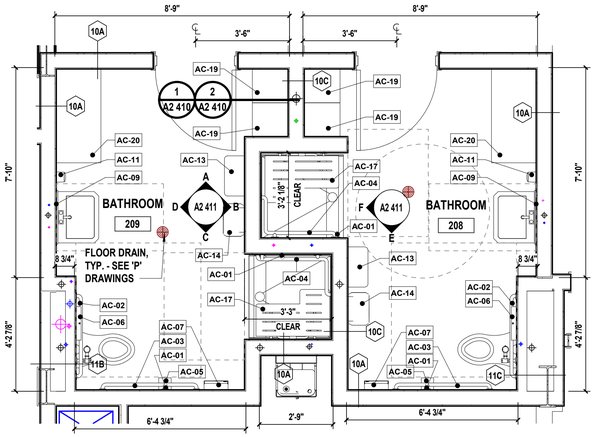

1 Second Floor Enlarged Toilet Room 209 & 210

SCALE: 3/8" = 1'-0"

NOTE:
SEE TILES ELEVATIONS ON A2 410 FOR WALL FINISHES

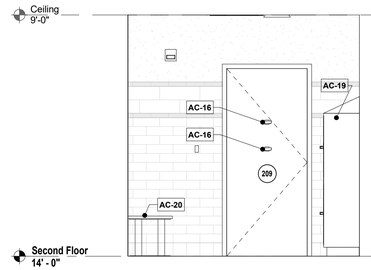

A Interior Elevation

SCALE: 3/8" = 1'-0"

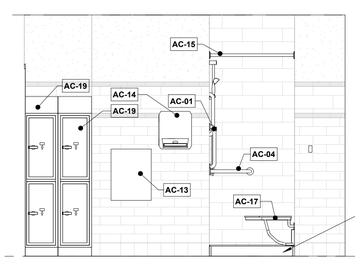

B Interior Elevation

SCALE: 3/8" = 1'-0"

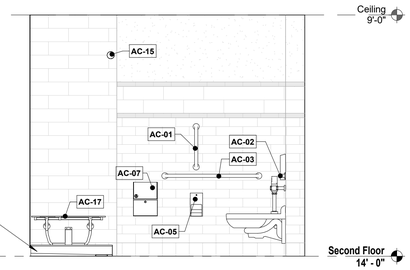

C Interior Elevation

SCALE: 3/8" = 1'-0"

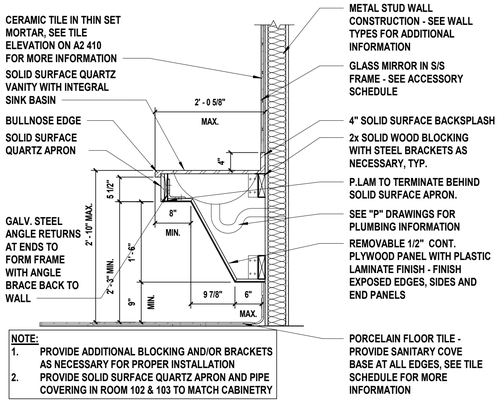

NOTE:
1. PROVIDE ADDITIONAL BLOCKING AND/OR BRACKETS AS NECESSARY FOR PROPER INSTALLATION
2. PROVIDE SOLID SURFACE QUARTZ APRON AND PIPE COVERING IN ROOM 102 & 103 TO MATCH CABINETRY

2 Vanity Section Detail

SCALE: 3/4" = 1'-0"

NOTE:
SEE TILES ELEVATIONS ON A2 410 FOR WALL FINISHES

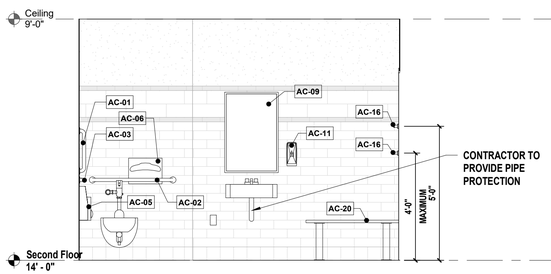

D Interior Elevation

SCALE: 3/8" = 1'-0"

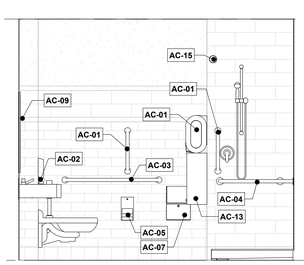

E Interior Elevation

SCALE: 3/8" = 1'-0"

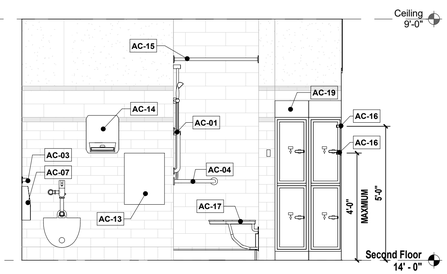

F Interior Elevation

SCALE: 3/8" = 1'-0"

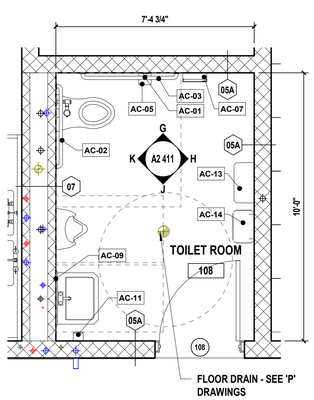

3 First Floor Enlarged Toilet Room 108

SCALE: 3/8" = 1'-0"

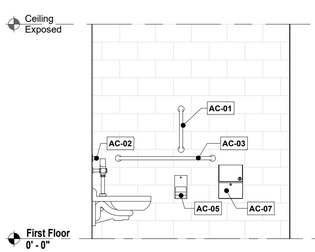

G Interior Elevation

SCALE: 3/8" = 1'-0"

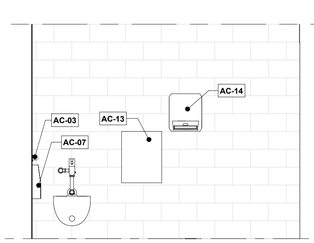

H Interior Elevation

SCALE: 3/8" = 1'-0"

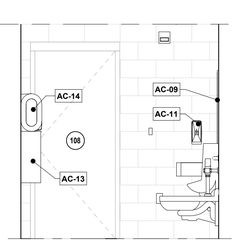

J Interior Elevation

SCALE: 3/8" = 1'-0"

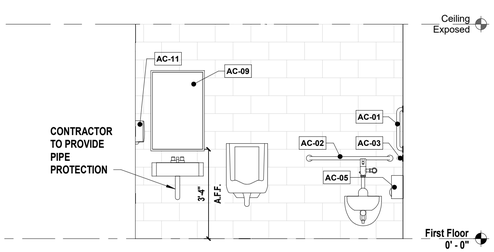

K Interior Elevation

SCALE: 3/8" = 1'-0"

H 2 M architects + engineers

538 Broad Hollow Road, 4th Floor East
Melville, NY 11747
631.756.8000 • www.h2m.com

CONSULTANTS:

MARK	DATE	DESCRIPTION

REGISTERED ARCHITECT ROBERT BEE 032389 STATE OF NEW YORK

*ALTERATION OF THIS DOCUMENT EXCEPT BY A LICENSED PROFESSIONAL IS ILLEGAL

DESIGNED BY:	DRAWN BY:	CHECKED BY:	REVIEWED BY:
KEM	JHG		
PROJECT No: VGFD2001	DATE: JULY 2022	SCALE: AS SHOWN	

CLIENT

VAILS GATE FIRE DISTRICT

New Storage Building (Phase I)
New Fire Station (Phase II)

872 Blooming Grove Turnpike
New Windsor, NY 12553

CONTRACT

CONTRACT G
GENERAL CONSTRUCTION

STATUS

FINAL BID DOCUMENT

SHEET TITLE

ARCHITECTURE
ENLARGED PLANS, INTERIOR ELEVATIONS, AND DETAILS
NEW FIRE STATION
PHASE 2

DRAWING No.

A2 411.00

C:\Users\jguzman\Documents\VGFD2001_Central21_A_jguzman.rvt

7/19/2022 8:35:39 AM

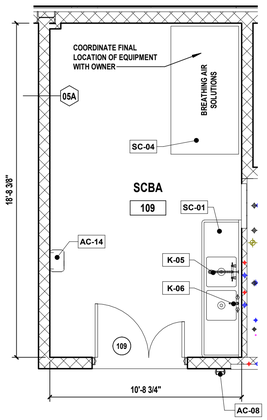

1 Enlarged SCBA Room 109
SCALE: 1/4" = 1'-0"

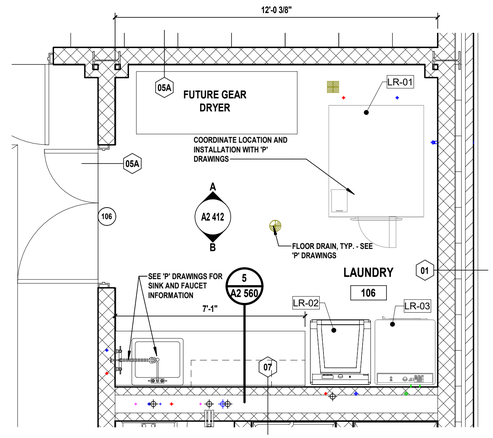

2 Enlarged Laundry Floor Plan
SCALE: 3/8" = 1'-0"

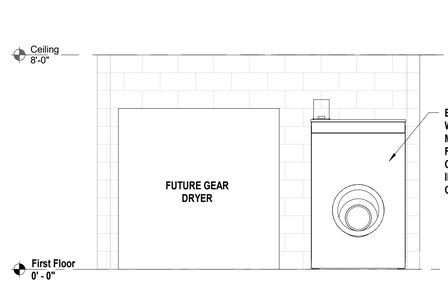

A Interior Elevation
SCALE: 3/8" = 1'-0"

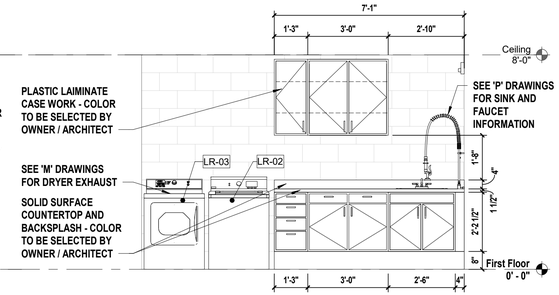

B Interior Elevation
SCALE: 3/8" = 1'-0"

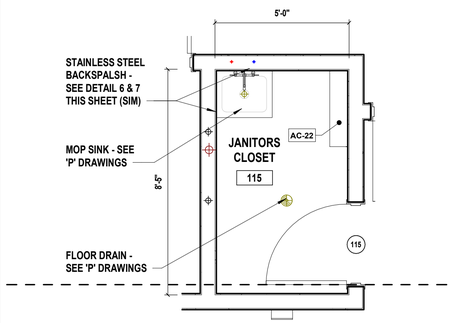

3 Enlarged Janitors Closet Room 115
SCALE: 3/8" = 1'-0"

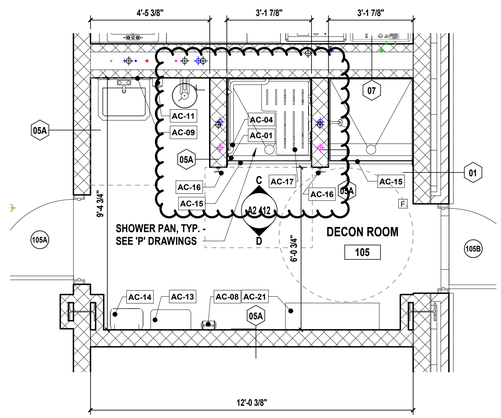

4 Enlarged Decon Floor Plan
SCALE: 3/8" = 1'-0"

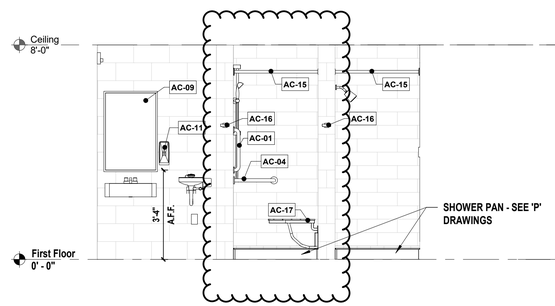

C Interior Elevation
SCALE: 3/8" = 1'-0"

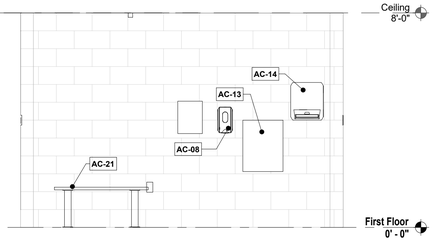

D Interior Elevation
SCALE: 3/8" = 1'-0"

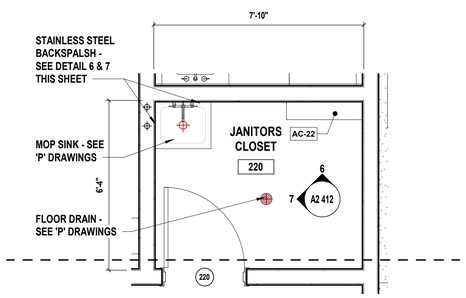

5 Enlarged Janitors Closet Room 220
SCALE: 3/8" = 1'-0"

NOTE:
JANITORS CLOSET ROOM 115 - ELEVATIONS ARE SIMILAR

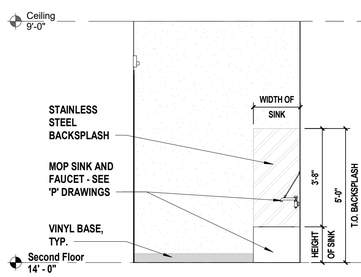

7 Interior Elevation
SCALE: 3/8" = 1'-0"

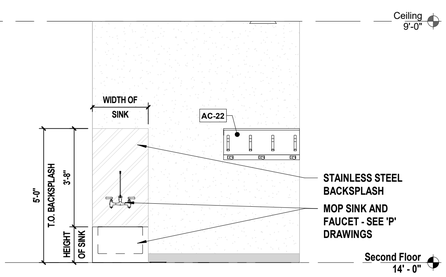

6 Interior Elevation
SCALE: 3/8" = 1'-0"

GENERAL EQUIPMENT SCHEDULE

MARK	DESCRIPTION	MANUFACTURER	MODEL	COMMENTS
LR-01	Gear Extractor	Wascomat	EXSM230C	Existing equipment, Installed by GC
LR-02	Washing Machine	GE	GTWN4250DOWS	Existing equipment, Installed by GC
LR-03	Dryer	GE	GTD84GCSN/GCPN	Provided by owner, Installed by GC
MEZZ-01	Air Compressor	Mako	BAM04-07H	Existing equipment, Installed by GC
MEZZ-02	Air Compressor	Speedaire	3VB60	Existing equipment, Installed by GC
SC-01	2 Compartment Sink	Advance Tabco	93-22-40-24RL	Provided by Owner, Installed by General Contractor
SC-04	Tank Filler	Mako	BAM04-07H	Existing equipment, Installed by GC

NOTE:
SEE ACCESSORY SCHEDULE ON SHEET A2 410 FOR ACCESSORY TAG INFORMATION

H2M architects + engineers
538 Broad Hollow Road, 4th Floor East
Melville, NY 11747
631.756.8000 • www.h2m.com

CONSULTANTS:

MARK	DATE	DESCRIPTION
2	12/22/2022	REVS. PER TOWN COMMENTS

REGISTERED ARCHITECT ROBERT BEE 032389 STATE OF NEW YORK

*ALTERATION OF THIS DOCUMENT EXCEPT BY A LICENSED PROFESSIONAL IS ILLEGAL.

DESIGNED BY:	DRAWN BY:	CHECKED BY:	REVIEWED BY:
KEM	JHG		
PROJECT No: VGFD2001	DATE: JULY 2022		SCALE: AS SHOWN

CLIENT
VAILS GATE FIRE DISTRICT

New Storage Building (Phase I)
New Fire Station (Phase II)

872 Blooming Grove Turnpike
New Windsor, NY 12553

CONTRACT
CONTRACT G
GENERAL CONSTRUCTION

STATUS
FINAL BID DOCUMENT

SHEET TITLE
ARCHITECTURE
NEW FIRE STATION
ENLARGED PLANS AND INTERIOR ELEVATIONS
PHASE 2

DRAWING No.
A2 412.02

C:\Users\jguzman\Documents\VGFD2001_Central21_A_jguzmanBK622.rvt
12/22/2022 8:11:26 AM

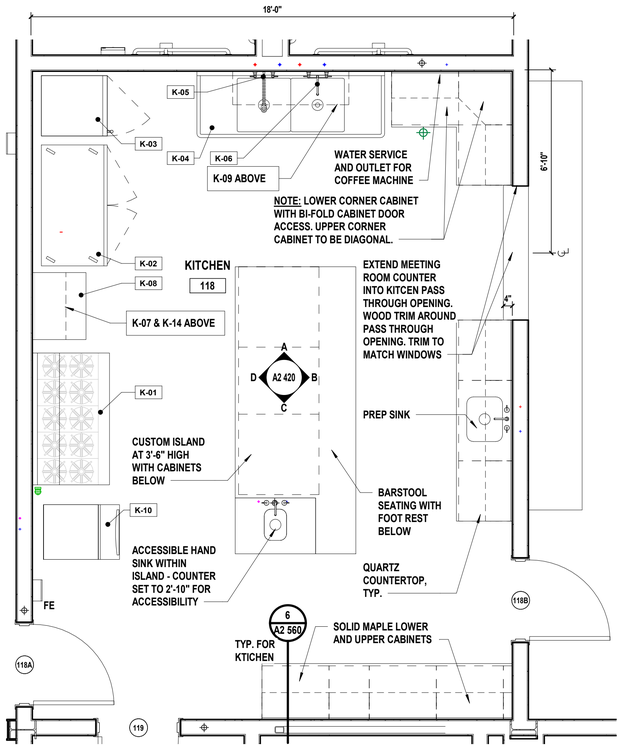

1 Enlarged Kitchen Floor Plan

SCALE: 3/8" = 1'-0"

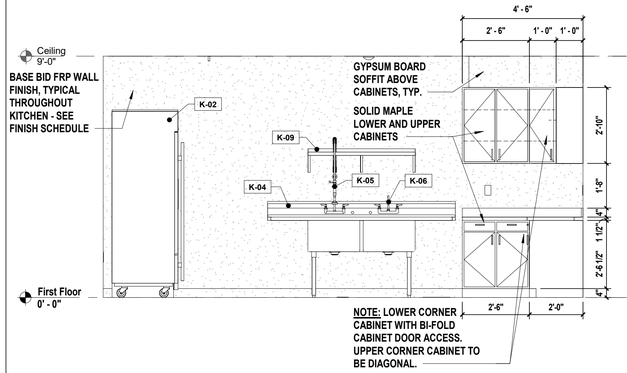

A Interior Elevation

SCALE: 3/8" = 1'-0"

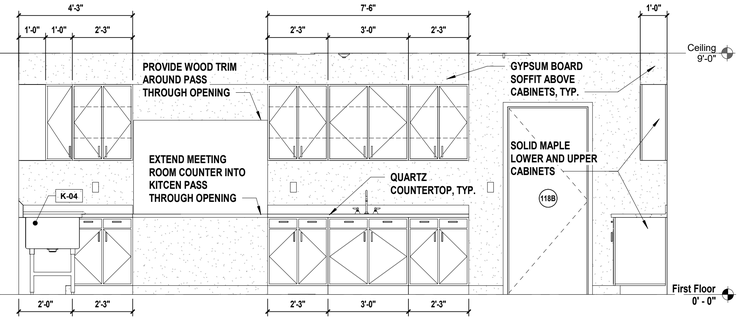

B Interior Elevation

SCALE: 3/8" = 1'-0"

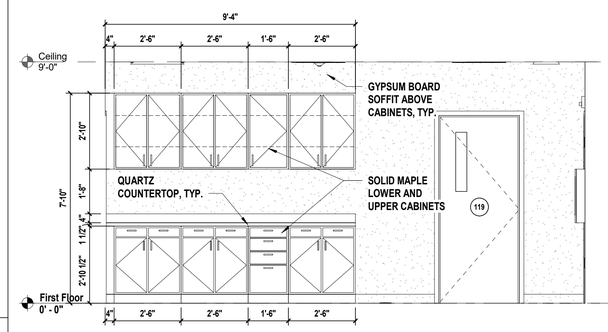

C Interior Elevation

SCALE: 3/8" = 1'-0"

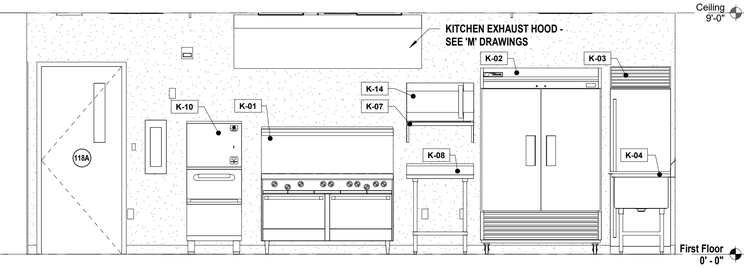

D Interior Elevation

SCALE: 3/8" = 1'-0"

KITCHEN EQUIPMENT SCHEDULE

MARK	DESCRIPTION	COMMENTS
K-01	Gas Restaurant Range	Provided by Owner, Installed by General Contractor
K-02	Reach - In Solid Swing Door Refrigerator	Provided by Owner, Installed by General Contractor
K-03	Reach - In Solid Swing Door Freezer	Provided by Owner, Installed by General Contractor
K-04	2 Compartment Dish Sink	Provided by Owner, Installed by General Contractor
K-05	Splash Mount Pre-Rinse Faucet	Provided by Owner, Installed by General Contractor, Also installed in Laundry and SCBA room
K-06		
K-07	Microwave Shelf	Provided by Owner, Installed by General Contractor
K-08	Stainless Steel Table with Backsplash	Provided by Owner, Installed by General Contractor
K-09	Wall Mounted Shelf	Provided by Owner, Installed by General Contractor
K-10	Ice Cube Machine with Storage Bin	Provided by Owner, Installed by General Contractor
K-14	Commercial Microwave Oven	Provided by Owner, Installed by General Contractor

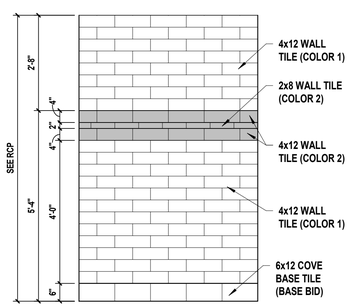

NOTE: COLOR SELECTION TO BE SELECTED BY ARCHITECT / OWNER

2 Add Alt #1 - Typical Kitchen Wall Tile Elevation

SCALE: 1/2" = 1'-0"

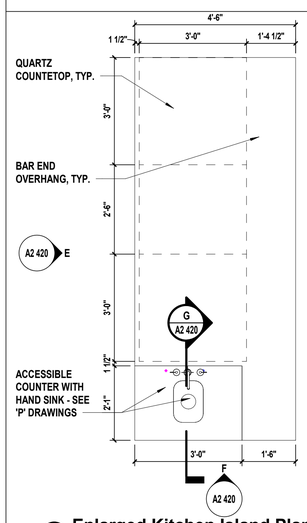

3 Enlarged Kitchen Island Plan

SCALE: 1/2" = 1'-0"

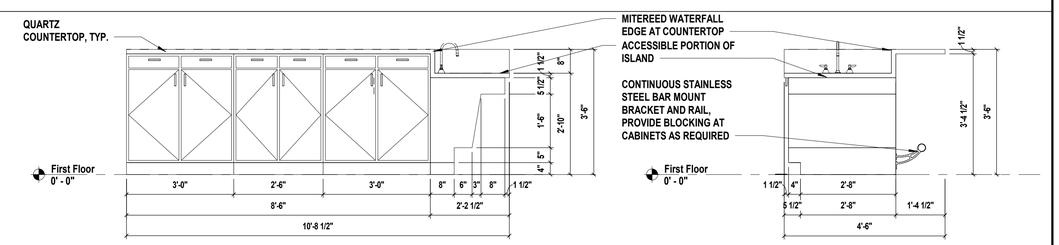

E Interior Elevation

SCALE: 1/2" = 1'-0"

F Interior Elevation

SCALE: 1/2" = 1'-0"

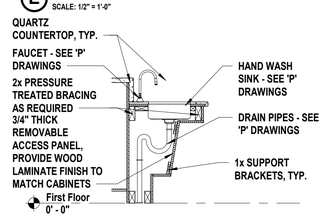

G Island Section at Accessible Counter

SCALE: 1/2" = 1'-0"

H2M architects + engineers

538 Broad Hollow Road, 4th Floor East
Melville, NY 11747
631.756.8000 • www.h2m.com

CONSULTANTS:

MARK	DATE	DESCRIPTION

REGISTERED ARCHITECT ROBERT BEE 032389 STATE OF NEW YORK

*ALTERATION OF THIS DOCUMENT EXCEPT BY A LICENSED PROFESSIONAL IS ILLEGAL.

DESIGNED BY:	DRAWN BY:	CHECKED BY:	REVIEWED BY:
KEM	JHG		
PROJECT No: VGFD2001	DATE: JULY 2022	SCALE: AS SHOWN	

CLIENT

VAILS GATE FIRE DISTRICT

New Storage Building (Phase I)
New Fire Station (Phase II)

872 Blooming Grove Turnpike
New Windsor, NY 12553

CONTRACT

CONTRACT G
GENERAL CONSTRUCTION

STATUS

FINAL BID DOCUMENT

SHEET TITLE

ARCHITECTURE
ENLARGED KITCHEN PLAN
NEW FIRE STATION
PHASE 2

DRAWING No.

A2 420.00

C:\Users\jgazman\Documents\VGFD2001_Central21_A_jgazman.rvt
7/19/2022 8:20:05 AM

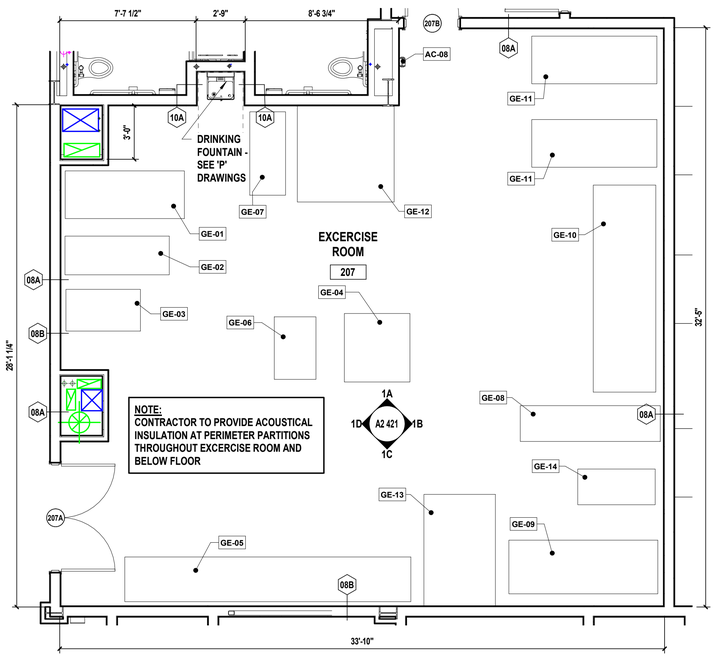

1 Enlarged Excercise Room Floor Plan

SCALE: 1/4" = 1'-0"

EXERCISE ROOM EQUIPMENT SCHEDULE

MARK	DESCRIPTION	COMMENTS
GE-01	Elliptical	N.I.C. - Shown for reference only
GE-02	Excercise Bike	N.I.C. - Shown for reference only
GE-03	Stair Mill	N.I.C. - Shown for reference only
GE-04	Curling Weight Tree	N.I.C. - Shown for reference only
GE-05	Dumbbell Racks	N.I.C. - Shown for reference only
GE-06	GHD	N.I.C. - Shown for reference only
GE-07	Air Dyne	N.I.C. - Shown for reference only
GE-08	Rower	N.I.C. - Shown for reference only
GE-09	Leg Press	N.I.C. - Shown for reference only
GE-10	Cable Crossover	N.I.C. - Shown for reference only
GE-11	Treadmill	N.I.C. - Shown for reference only
GE-12	Smith Machine	N.I.C. - Shown for reference only
GE-13	Rogue MLW Rig	N.I.C. - Shown for reference only
GE-14	Ski ERG	N.I.C. - Shown for reference only

COMPANY KITCHEN EQUIPMENT SCHEDULE

MARK	DESCRIPTION	Manufacturer	Model	COMMENTS
CK-01	Range	GE	JGBS30REKSS	Provided by Owner - State Contract (GC to install)
CK-02	Refrigerator	Kitchenaid	KRFC300ESS	Provided by Owner - State Contract (GC to install)

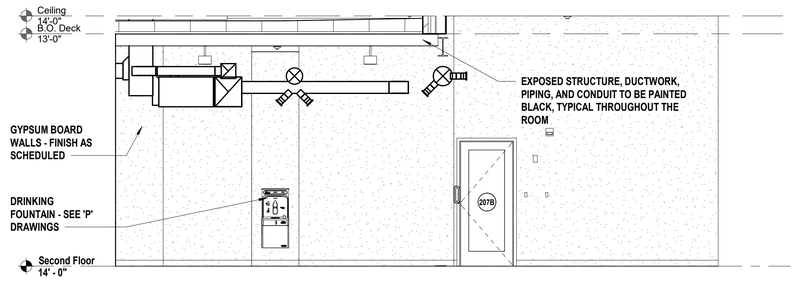

1A Interior Elevation

SCALE: 1/4" = 1'-0"

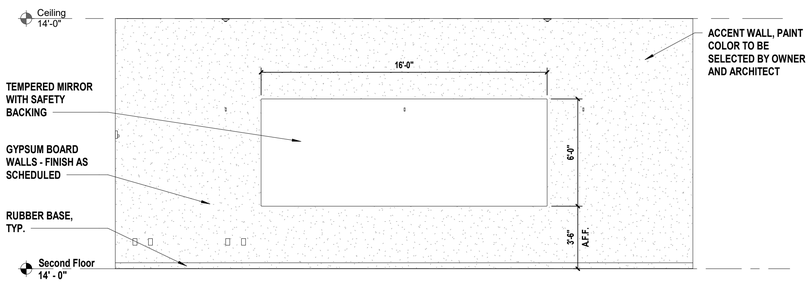

1B Interior Elevation

SCALE: 1/4" = 1'-0"

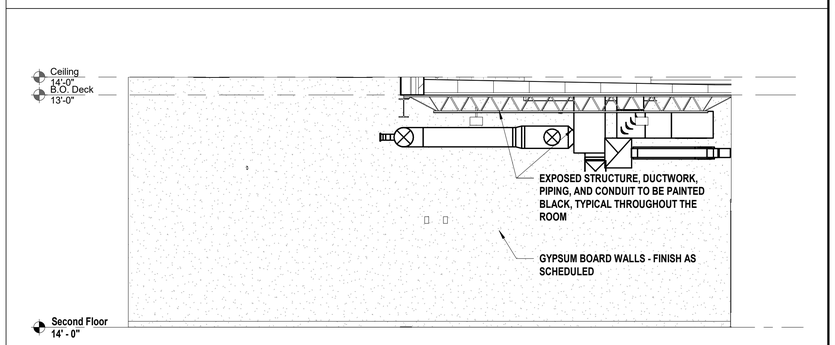

1C Interior Elevation

SCALE: 1/4" = 1'-0"

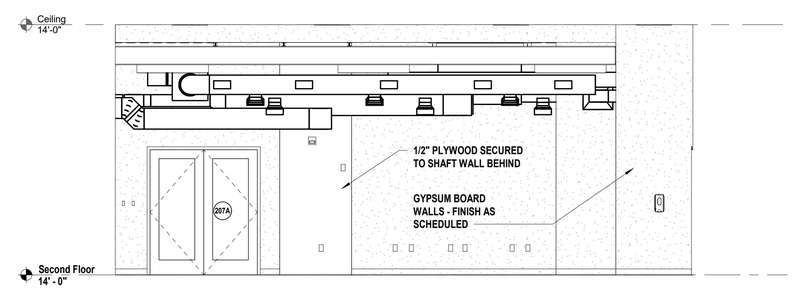

1D Interior Elevation

SCALE: 1/4" = 1'-0"

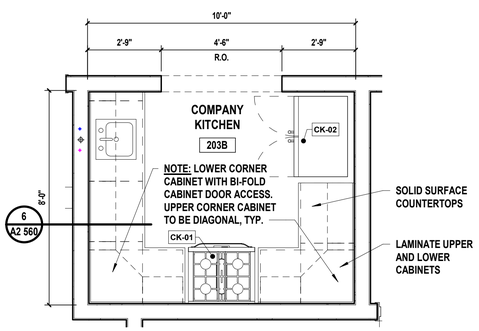

2 Enlarged Company Kitchen

SCALE: 3/8" = 1'-0"

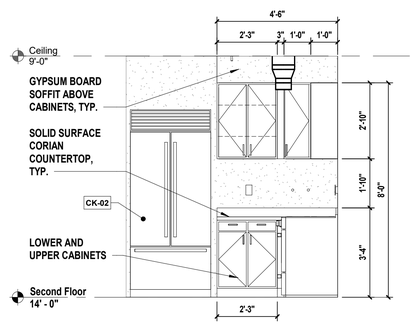

2A Interior Elevation

SCALE: 3/8" = 1'-0"

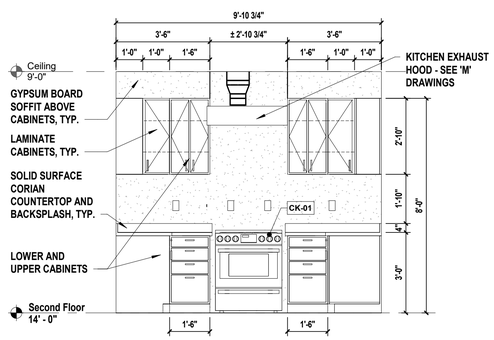

2B Interior Elevation

SCALE: 3/8" = 1'-0"

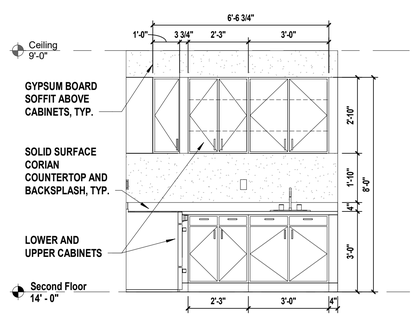

2C Interior Elevation

SCALE: 3/8" = 1'-0"

H 2 M architects + engineers

538 Broad Hollow Road, 4th Floor East
Melville, NY 11747
631.756.8000 • www.h2m.com

CONSULTANTS:

MARK	DATE	DESCRIPTION

REGISTERED ARCHITECT ROBERT BEE 032389 STATE OF NEW YORK

*ALTERATION OF THIS DOCUMENT EXCEPT BY A LICENSED PROFESSIONAL IS ILLEGAL.

DESIGNED BY:	DRAWN BY:	CHECKED BY:	REVIEWED BY:
KEM	JHG		

PROJECT No:	DATE:	SCALE:
VGFD2001	JULY 2022	AS SHOWN

CLIENT

VAILS GATE FIRE DISTRICT

New Storage Building (Phase I)
New Fire Station (Phase II)

872 Blooming Grove Turnpike
New Windsor, NY 12553

CONTRACT

CONTRACT G
GENERAL CONSTRUCTION

STATUS

FINAL BID DOCUMENT

SHEET TITLE

ARCHITECTURE
ENLARGED EXCERCISE & COMPANY KITCHEN, NOTES & DETAILS
NEW FIRE STATION
PHASE 2

DRAWING No.

A2 421.00

C:\Users\jguzman\Documents\VGFD2001_Central21_A_jguzman.rvt

7/18/2022 8:20:11 AM

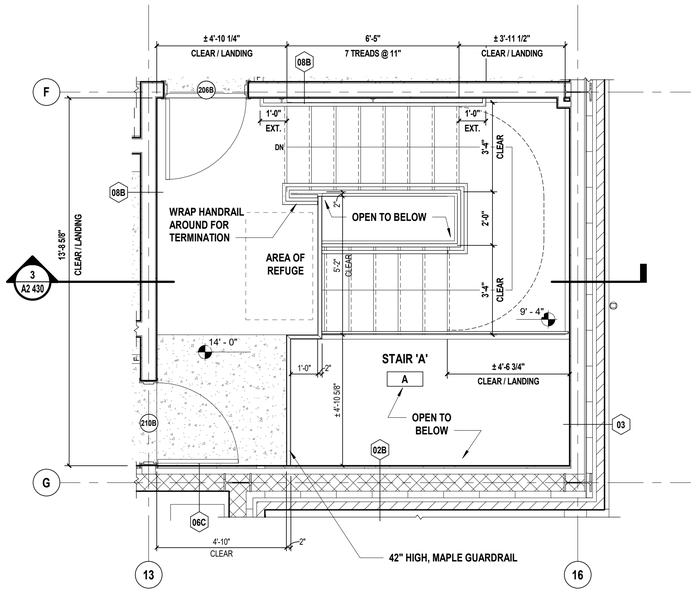

1 Second Floor Stair 'A'
SCALE: 3/8" = 1'-0"

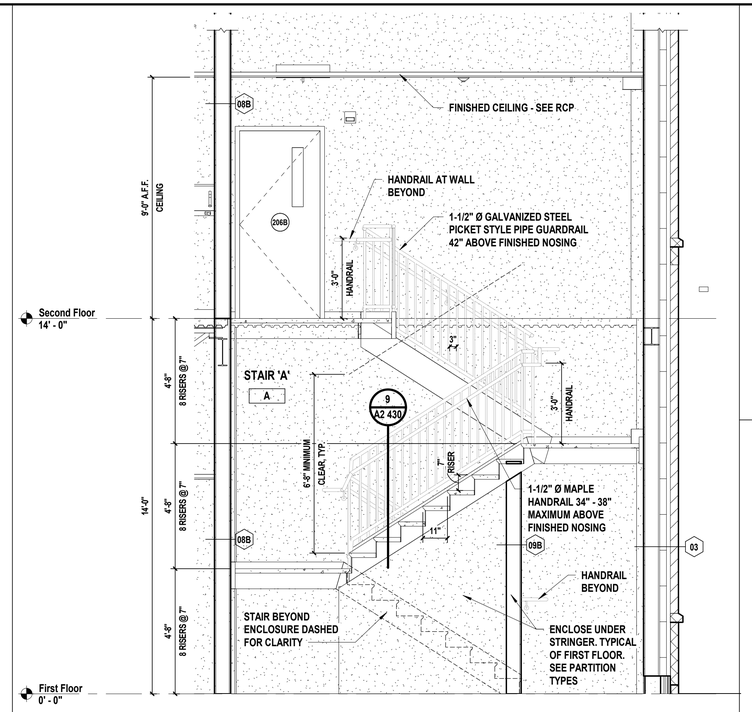

3 Stair 'A' Section
SCALE: 3/8" = 1'-0"

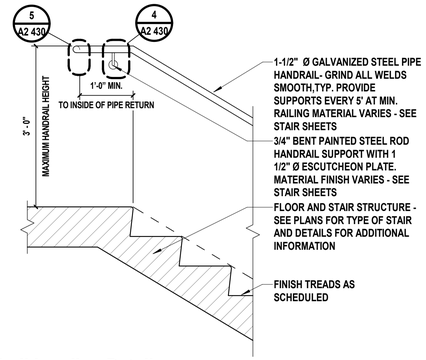

7 Typical Handrail Landing Detail
SCALE: 3/4" = 1'-0"

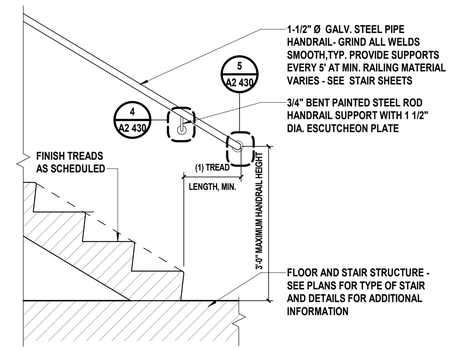

8 Typical Handrail Base Detail
SCALE: 3/4" = 1'-0"

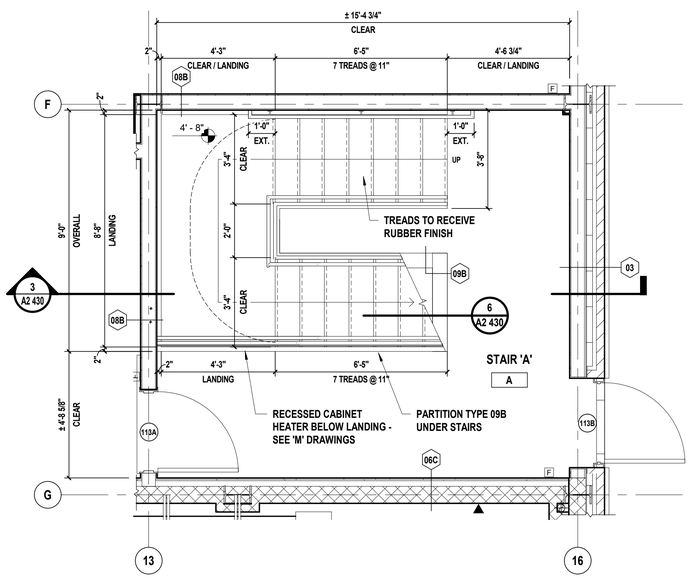

2 First Floor Stair 'A'
SCALE: 3/8" = 1'-0"

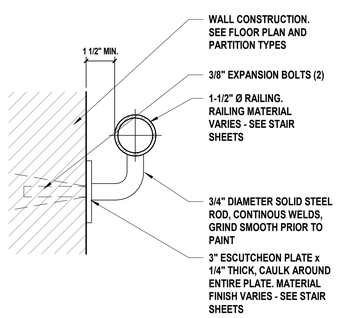

4 Wall Anchoring Handrail Detail
SCALE: 3" = 1'-0"

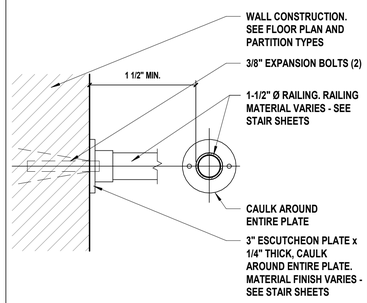

5 Wall Anchoring Handrail Detail
SCALE: 3" = 1'-0"

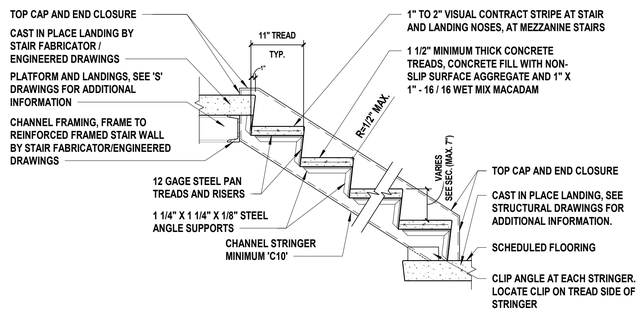

6 Typical Steel Pan Stair Detail
SCALE: 3/4" = 1'-0"

NOTE:
1. ALL STAIR COMPONENTS INCLUDING BUT NOT LIMITED TO STRINGERS, TREADS, RAILINGS, ANCHORS, AND ACCESSORIES SHALL BE HOT DIPPED GALVANIZED
2. CONTRACTOR TO PROVIDE SIGNED AND SEALED SHOP DRAWINGS OF STAIRS, LANDINGS, CONNECTIONS, AND RAILINGS FROM A LICENSED P.E. FOR ARCHITECT OR RECORD REVIEW.

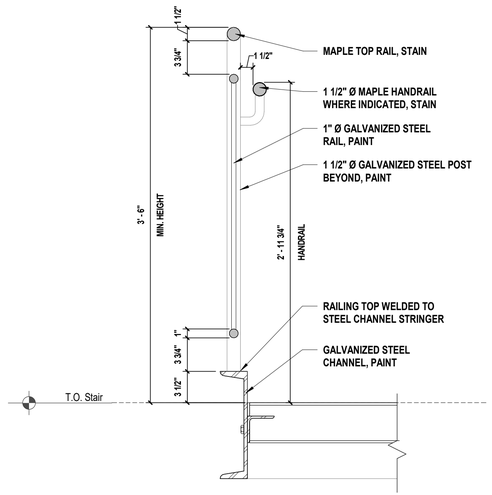

9 Railing Detail
SCALE: 1 1/2" = 1'-0"

H2M architects + engineers
538 Broad Hollow Road, 4th Floor East
Melville, NY 11747
631.756.8000 • www.h2m.com

CONSULTANTS:

MARK	DATE	DESCRIPTION

REGISTERED ARCHITECT ROBERT BEE 032389 STATE OF NEW YORK

*ALTERATION OF THIS DOCUMENT EXCEPT BY A LICENSED PROFESSIONAL IS ILLEGAL.

DESIGNED BY:	DRAWN BY:	CHECKED BY:	REVIEWED BY:
KEM	JHG		
PROJECT No: VGFD2001	DATE: JULY 2022	SCALE: AS SHOWN	

CLIENT
VAILS GATE FIRE DISTRICT

New Storage Building (Phase I)
New Fire Station (Phase II)

872 Blooming Grove Turnpike
New Windsor, NY 12553

CONTRACT
CONTRACT G
GENERAL CONSTRUCTION

STATUS
FINAL BID DOCUMENT

SHEET TITLE
ARCHITECTURE
ENLARGED STAIR PLAN AND DETAILS
NEW FIRE STATION
PHASE 2

DRAWING No.
A2 430.00

C:\Users\jguzman\Documents\VGFD2001_Central21_A_jguzman.rvt
7/18/2022 8:20:14 AM

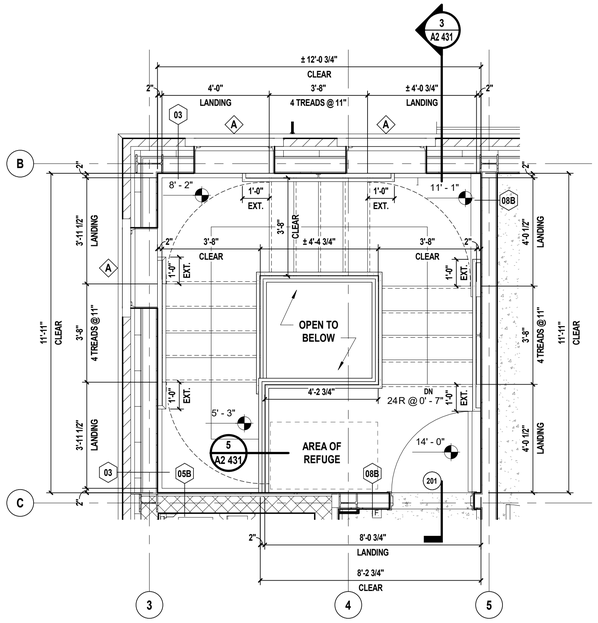

1 Second Floor Stair 'B'

SCALE: 3/8" = 1'-0"

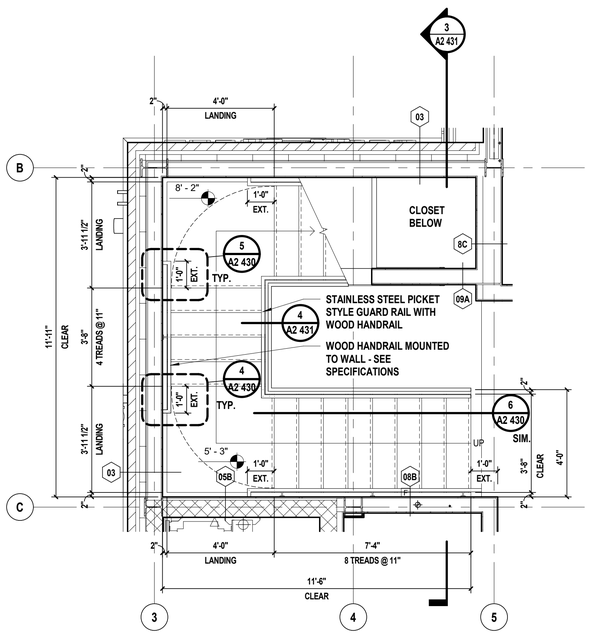

2 First Floor Stair 'B'

SCALE: 3/8" = 1'-0"

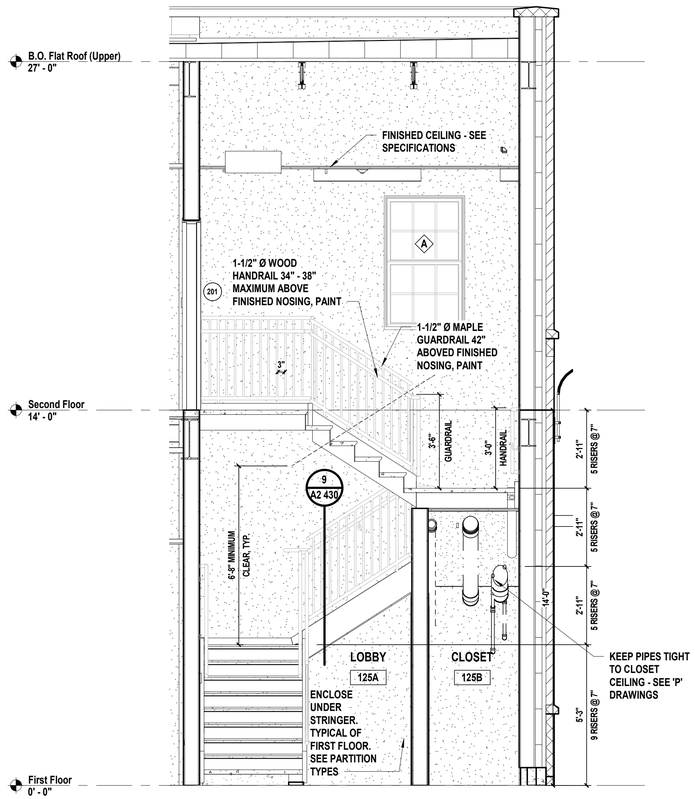

3 Stair 'B' Section

SCALE: 3/8" = 1'-0"

NOTE:

1. CONTRACTOR TO PROVIDE SIGNED AND SEALED SHOP DRAWINGS OF STAIRS, LANDINGS, CONNECTIONS, AND RAILINGS FROM A LICENSED P.E. FOR ARCHITECT OR RECORD REVIEW.

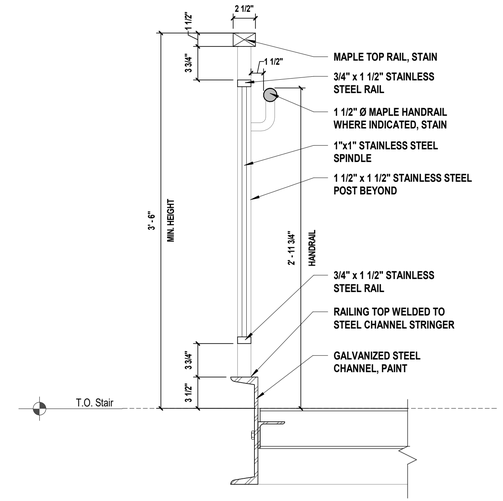

4 Stringer Mounted Railing Detail

SCALE: 1 1/2" = 1'-0"

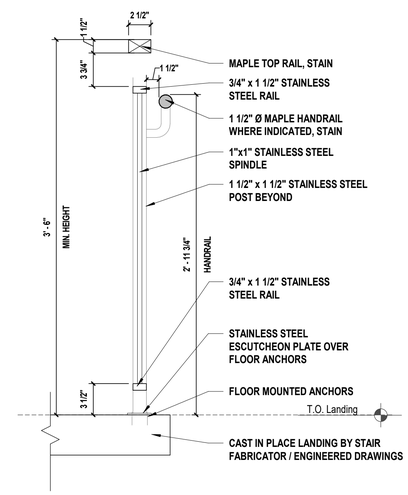

5 Floor Mounted Railing Detail

SCALE: 1 1/2" = 1'-0"

H2M architects + engineers

538 Broad Hollow Road, 4th Floor East
Melville, NY 11747
631.756.8000 • www.h2m.com

CONSULTANTS:

MARK	DATE	DESCRIPTION

REGISTERED ARCHITECT ROBERT BEER 032389 STATE OF NEW YORK

*ALTERATION OF THIS DOCUMENT EXCEPT BY A LICENSED PROFESSIONAL IS ILLEGAL.

DESIGNED BY:	DRAWN BY:	CHECKED BY:	REVIEWED BY:
KEM	JHG		
PROJECT No: VGFD2001	DATE: JULY 2022		SCALE: AS SHOWN

CLIENT

VAILS GATE FIRE DISTRICT

New Storage Building (Phase I)
New Fire Station (Phase II)

872 Blooming Grove Turnpike
New Windsor, NY 12553

CONTRACT

CONTRACT G
GENERAL CONSTRUCTION

STATUS

FINAL BID DOCUMENT

SHEET TITLE

ARCHITECTURE
ENLARGED STAIR PLAN AND DETAILS
NEW FIRE STATION
PHASE 2

DRAWING No.

A2 431.00

C:\Users\jguzman\Documents\VGFD2001_Central21_A_jguzman.rvt

7/18/2022 8:20:18 AM

NOTE:
CONTRACTOR TO COORDINATE MASONRY OPENING SIZES AND LOCATIONS WITH ELEVATOR MANUFACTURER

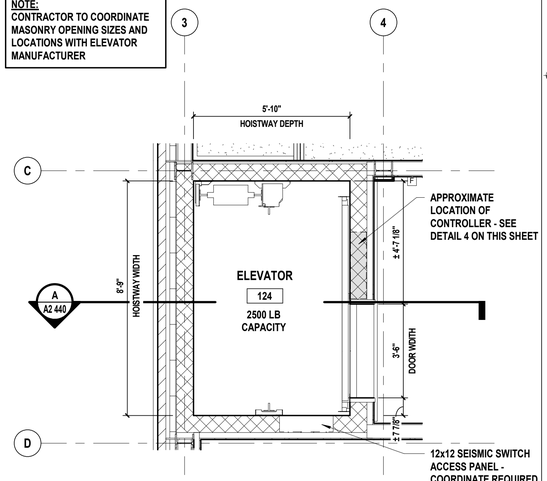

1 Second Floor Elevator Plan
SCALE: 3/8" = 1'-0"

NOTE:
CONTRACTOR TO COORDINATE MASONRY OPENING SIZES AND LOCATIONS WITH ELEVATOR MANUFACTURER

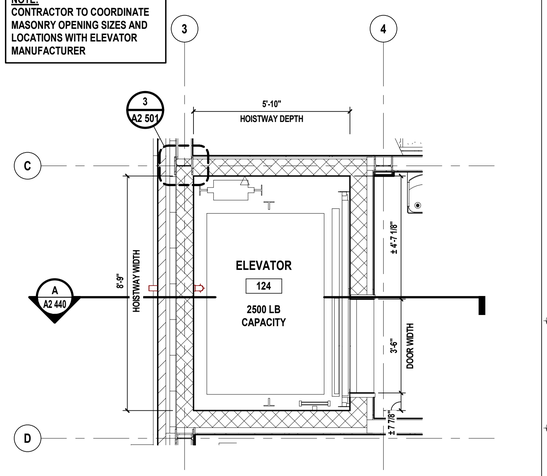

2 First Floor Elevator Plan
SCALE: 3/8" = 1'-0"

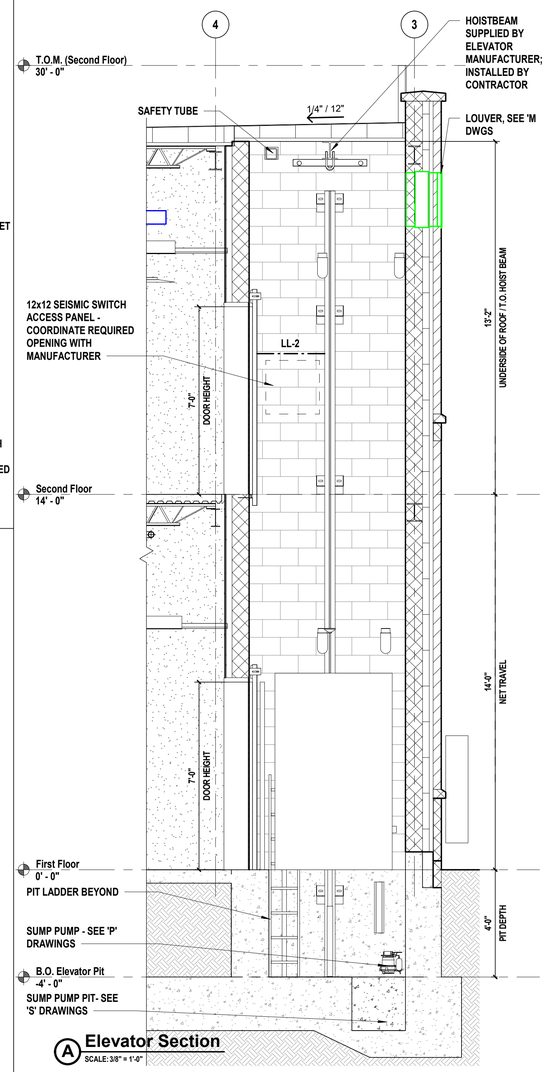

A Elevator Section
SCALE: 3/8" = 1'-0"

GENERAL ELEVATOR NOTES

1. CONTRACTOR TO PROVIDE A CLEAR, PLUMB HOISTWAY OF THE SIZE SHOWN ON THE DRAWINGS. VARIATIONS MUST NOT EXCEED 1". (TOLERANCE = -0" + 1")
2. CONTRACTOR TO PROVIDE ADEQUATE SUPPORT FOR GUIDE RAIL BRACKETS FROM PIT FLOOR TO THE TOP OF THE HOISTWAY AND NOT SPANNING FURTHER THAN ALLOWED BY THE GOVERNING CODE AUTHORITY. FIREPROOFING SHALL BE AFTER INSTALLATION OF ELEVATOR BRACKETS.
3. HOISTWAY VENTILATION SHALL BE PROVIDED PER CODE REQUIREMENTS.
4. PROJECTIONS REQUIRING BEVELING IN ACCORDANCE WITH CODE REQUIREMENTS SHALL BE BEVELED AT AN ANGLE NOT LESS THAN 75 DEGREES FROM THE HORIZONTAL.
5. PROVIDE REMOVABLE, OSHA COMPLIANT BARRICADES AROUND ALL HOISTWAY OPENINGS AND BETWEEN ELEVATORS INSIDE OF THE HOISTWAY AS REQUIRED. PROVIDE TWO LIFELINE ATTACHMENTS AT THE TOP, FRONT OF THE HOISTWAY.
6. CONTRACTOR TO PROVIDE ALL BLOCK OUT / CUTOUT OF OPENINGS TO INSTALL HALL PUSH BUTTONS, SIGNAL FIXTURES, AND HATCH DUCT. COORDINATE LOCATIONS WITH ELEVATOR MANUFACTURER.
7. CONTRACTOR TO PROVIDE A DRY PIT REINFORCED TO SUSTAIN VERTICAL FORCE FROM RAILS AND BUFFERS. REFERENCE THE REACTION LOAD TABLES FROM APPROVED SHOP DRAWINGS FOR VERTICAL FORCES. SUMPS AND/OR PUMPS (WHERE PERMITTED) LOCATED WITHIN THE PIT MAY NOT INTERFERE WITH THE ELEVATOR EQUIPMENT.
8. CONTRACTOR TO PROVIDE SUITABLE LIGHTING FOR THE MACHINE SPACE WITH A LIGHT SWITCH LOCATED IN THE HOISTWAY. PROVIDE A LIGHT FIXTURE AND A SEPARATE GFCI PROTECTED DUPLEX CONVENIENCE OUT IN THE ELEVATOR PIT. OUTLET, LIGHT AND SWITCH TO BE ON SEPARATE BRANCH CIRCUIT.
9. ENTRANCE WALLS ARE TO BE LEFT OPEN UNTIL THE ELEVATOR EQUIPMENT IS INSTALLED. ADEQUATE SUPPORT FOR ENTRANCE ATTACHMENT POINTS IS REQUIRED AT ALL LANDINGS. ALL FINISHED FLOORING AND GROUTING IS TO BE INSTALLED AFTER THE ENTRANCE FRAMES ARE INSTALLED.
10. FOR PROPER EQUIPMENT OPERATION, THE MACHINE SPACE AT THE TOP OF THE HOISTWAY MUST BE PROPERLY VENTED PER CODE REQUIREMENTS. MAX ALLOWED HUMIDITY IS 95% NON-CONDENSING. HOISTWAY MUST MAINTAIN A TEMPERATURE BETWEEN 41° F AND 104° F.
11. THE ACCESS DOOR TO THE CONTROL SPACE OR THE CONTROL ROOM MUST BE SECURED AGAINST UNAUTHORIZED ACCESS. IT SHALL BE SELF-LOCKING AND SELF-CLOSING.
12. CONTRACTOR TO PROVIDE A 14-AMP 120V AC FUSED SERVICE WITH GROUND (VIA EMERGENCY LIGHT SUPPLY IF AVAILABLE) CONNECTED TO EACH CONTROL CABINET FOR LIGHTING AND FAN. PROVIDE DEDICATED ANALOG PHONE LINE TERMINATING AT THE ELEVATOR CONTROL CABINET.
13. CONTRACTOR TO PROVIDE A SUITABLE WORKING ENVIRONMENT INCLUDING ADEQUATE ACCESS TO THE BUILDING, PROPER LIGHTING IN ALL AREAS, CLEAN AND SAFE STORAGE ADJACENT TO THE HOISTWAY, PROPERLY INSTALLED TEMPORARY SINGLE AND THREE-PHASE POWER, AND SUFFICIENT ON SITE REFUSE CONTAINERS FOR THE DISPOSAL OF ELEVATOR PACKING MATERIALS.
14. CONTRACTOR TO SUBMIT SHOP DRAWINGS FROM ELEVATOR MANUFACTURER TO ARCHITECT FOR REVIEW AND APPROVAL.
15. NON-ELEVATOR RELATED PIPING AND EQUIPMENT IS PROHIBITED IN MACHINE ROOM OR HOISTWAY.

PIT/OVERHEAD REQUIREMENTS

SPEED	PIT DEPTH	MAXMIMUM TOTAL RISE	OVERHEAD HEIGHT
150 FPM	4'-0"	14'-0"	12'-6"

NOTES:
1. HOISTWAY SIZE MUST BE PLUMB WITHIN 1" AND MUST NOT BE LESS THAN FIGURES SHOWN.
2. SUMP OR DRAIN LOCATION IN PIT TO BE COORDINATED WITH MANUFACTURER TO AVOID ELEVATOR COMPONENETS AND ACCESS AREA.
3. HOISTWAY FASCIA IS NOT SELF-SUPPORTING FOR LONG, CONTINUOUS RUNS VOID OF ENTRANCES, ADEQUATE SUPPORT FOR THE FASCIA MUST BE PROVIDED.

ELEVATOR HEIGHT REQUIREMENTS

FLOOR	FLOOR HEIGHT
GROUND FLOOR	0'-0"
SECOND FLOOR	14'-0"
TOTAL RISE	14'-0"

NOTE:
ALL STRUCTURAL STEEL IN ELEVATOR SHAFT SHALL RECEIVE (1) HOUR MINIMUM SPRAY FIRE PROOFING - SEE SPECIFICATIONS

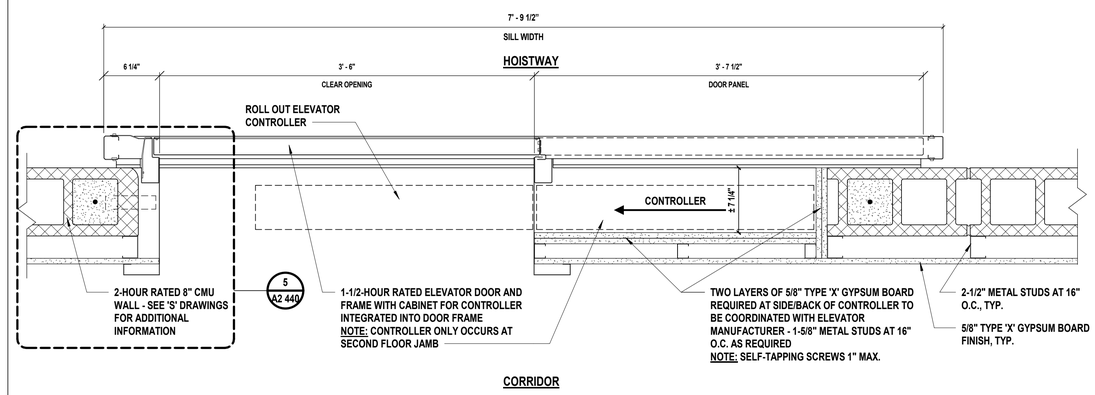

4 Controller Detail
SCALE: 1 1/2" = 1'-0"

NOTE:
CONTRACTOR TO COORDINATE MASONRY OPENING SIZES AND LOCATIONS WITH ELEVATOR MANUFACTURER

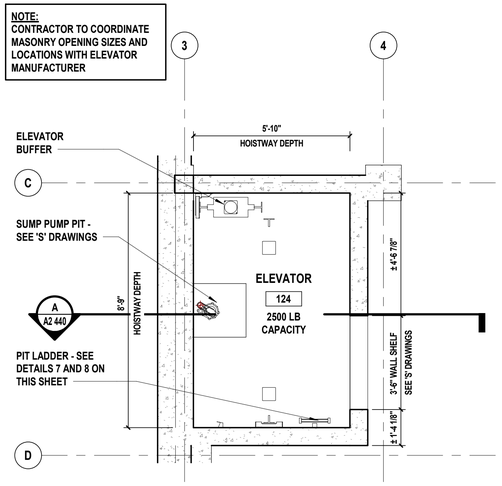

3 Pit Level Elevator Plan
SCALE: 3/8" = 1'-0"

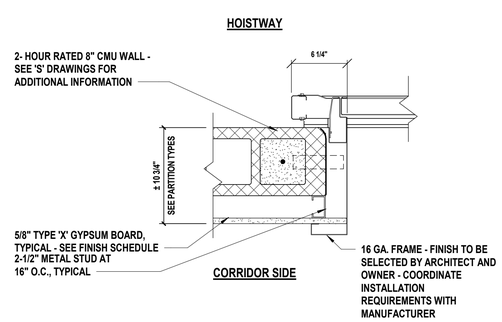

5 Elevator Jamb Detail
SCALE: 1 1/2" = 1'-0"

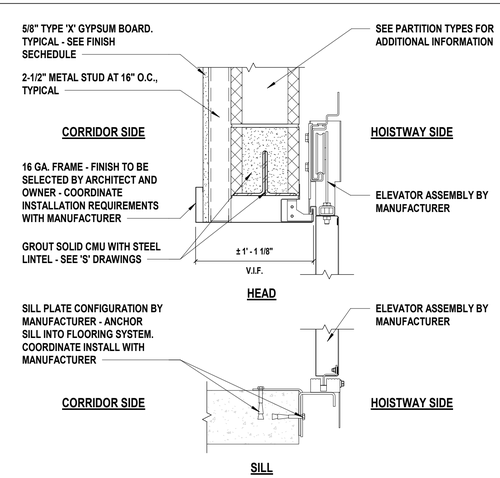

6 Head and Sill Detail
SCALE: 1 1/2" = 1'-0"

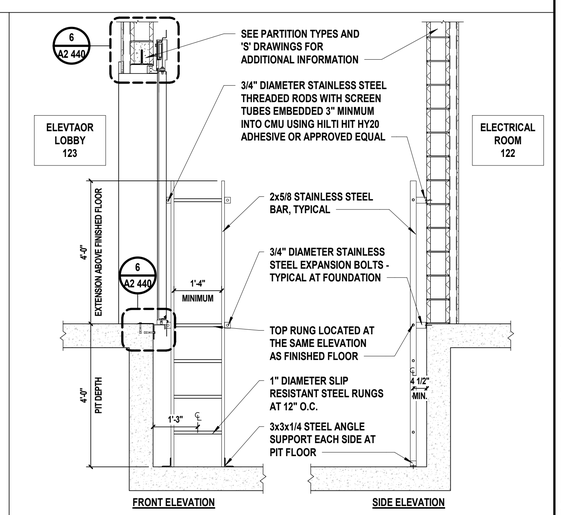

7 Pit Ladder Detail
SCALE: 1/2" = 1'-0"

H 2 M architects + engineers
538 Broad Hollow Road, 4th Floor East
Melville, NY 11747
631.756.8000 • www.h2m.com

CONSULTANTS:

MARK	DATE	DESCRIPTION

REGISTERED ARCHITECT ROBERT BEE 032389 STATE OF NEW YORK

*ALTERATION OF THIS DOCUMENT EXCEPT BY A LICENSED PROFESSIONAL IS ILLEGAL

DESIGNED BY:	DRAWN BY:	CHECKED BY:	REVIEWED BY:
KEM	JHG		
PROJECT No: VGFD2001	DATE: JULY 2022	SCALE: AS SHOWN	

CLIENT
VAILS GATE FIRE DISTRICT

New Storage Building (Phase I)
New Fire Station (Phase II)

872 Blooming Grove Turnpike
New Windsor, NY 12553

CONTRACT
CONTRACT G
GENERAL CONSTRUCTION

STATUS
FINAL BID DOCUMENT

SHEET TITLE
ARCHITECTURE
ENLARGED ELEVATOR PLAN
NEW FIRE STATION
PHASE 2

DRAWING No.
A2 440.00

C:\Users\jgusman\Documents\VGFD2001_Central21_A_jgusman.rvt
7/19/2022 8:20:22 AM

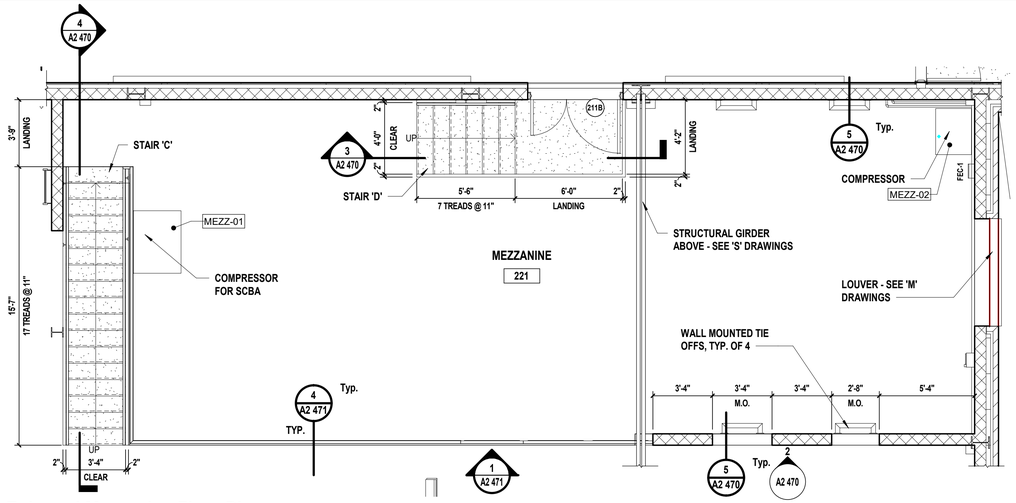

1 Enlarged Mezzanine Floor Plan

SCALE: 1/4" = 1'-0"

NOTE:
SEE GENERAL EQUIPMENT SCHEDULE ON SHEET A2 412 FOR EQUIPMENT TAG INFORMATION

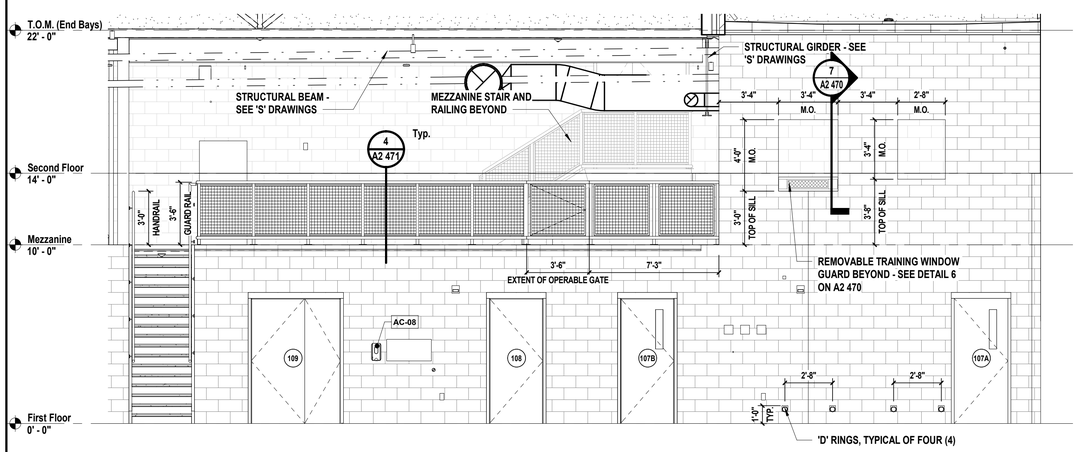

2 Mezzanine Interior Elevation

SCALE: 1/4" = 1'-0"

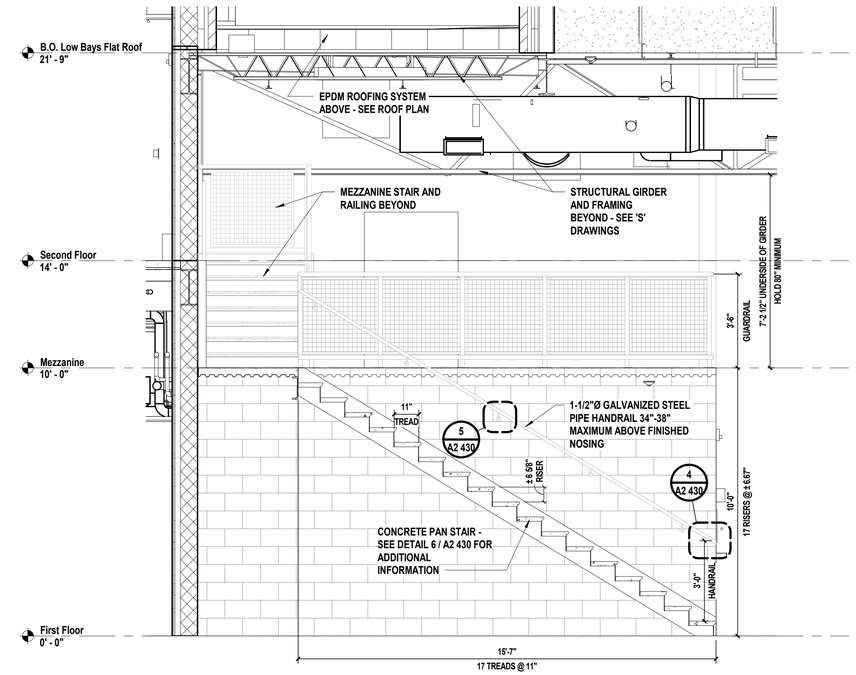

4 Stair 'C' Section

SCALE: 3/8" = 1'-0"

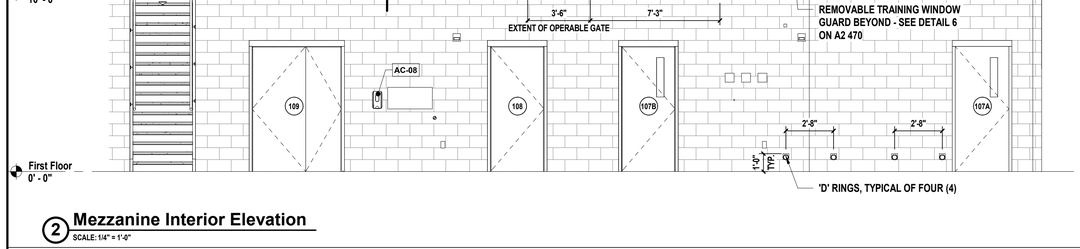

NOTE:

1. ALL STAIR COMPONENTS INCLUDING BUT NOT LIMITED TO STRINGERS, TREADS, RAILINGS, ANCHORS, AND ACCESSORIES SHALL BE HOT DIPPED GALVANIZED

3 Stair 'D' Section

SCALE: 3/8" = 1'-0"

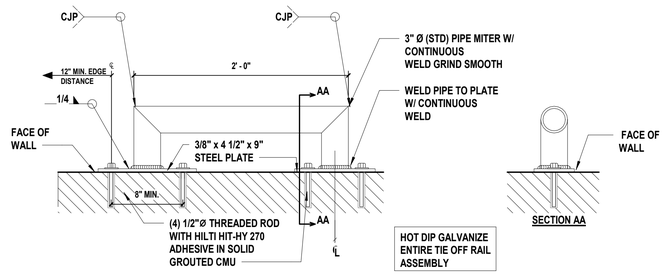

5 Tie-off Rail Detail

SCALE: 1 1/2" = 1'-0"

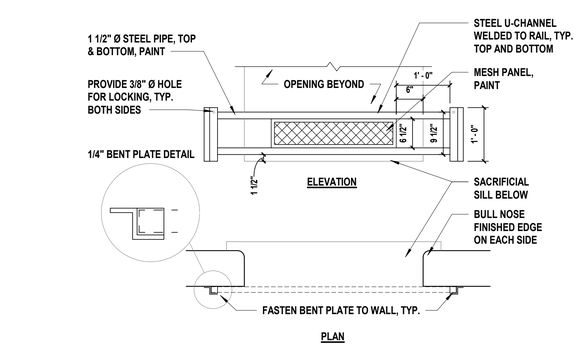

6 Opening at Training Window

SCALE: 3/4" = 1'-0"

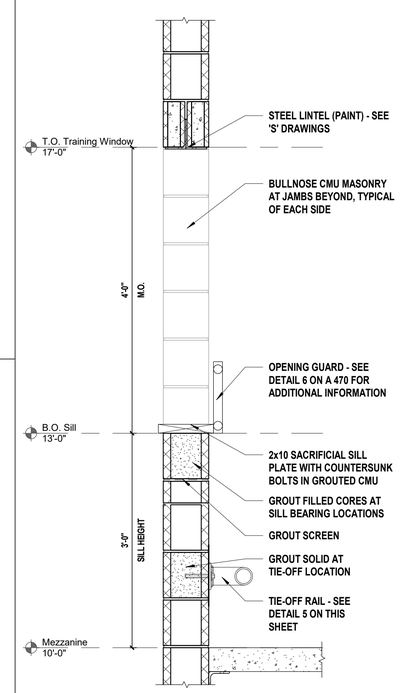

7 Training Window Section

SCALE: 1" = 1'-0"

H 2 M architects + engineers

538 Broad Hollow Road, 4th Floor East
Melville, NY 11747
631.756.8000 • www.h2m.com

CONSULTANTS:

MARK	DATE	DESCRIPTION

REGISTERED ARCHITECT ROBERT BEE 032389 STATE OF NEW YORK

*ALTERATION OF THIS DOCUMENT EXCEPT BY A LICENSED PROFESSIONAL IS ILLEGAL.

DESIGNED BY:	DRAWN BY:	CHECKED BY:	REVIEWED BY:
KEM	JHG		

PROJECT No:	DATE:	SCALE:
VGFD2001	JULY 2022	AS SHOWN

CLIENT

VAILS GATE FIRE DISTRICT

New Storage Building (Phase I)
New Fire Station (Phase II)

872 Blooming Grove Turnpike
New Windsor, NY 12553

CONTRACT

CONTRACT G
GENERAL CONSTRUCTION

STATUS

FINAL BID DOCUMENT

SHEET TITLE

ARCHITECTURE
ENLARGED MEZZANINE PLAN, ELEVATION, AND DETAILS
NEW FIRE STATION
PHASE 2

DRAWING No.

A2 470.00

C:\Users\jgazman\Documents\VGFD2001_Central21_A_jgazman.rvt

7/19/2022 8:20:28 AM

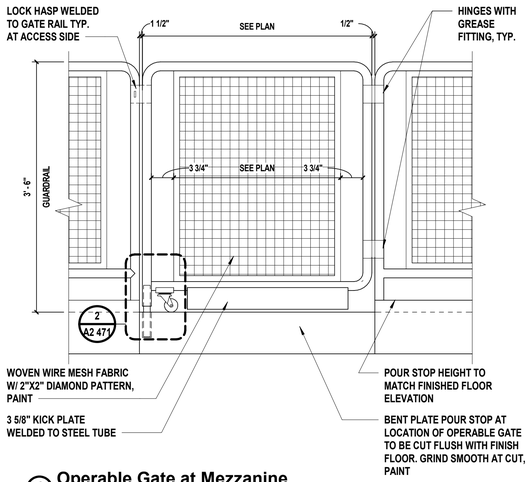

1 Operable Gate at Mezzanine

SCALE: 1" = 1'-0"

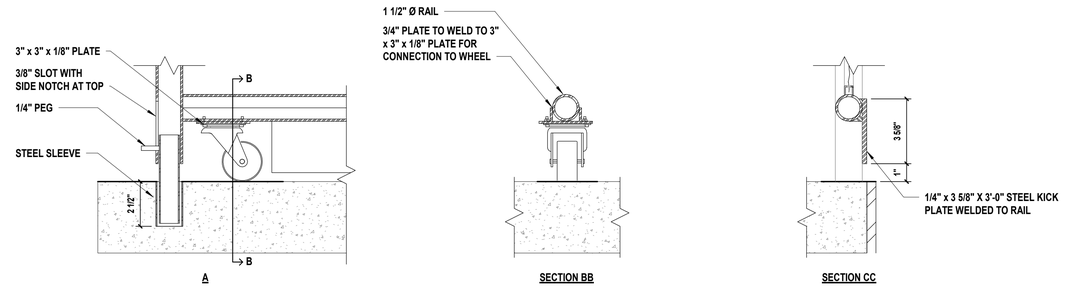

2 Caster/Kick Plate at Operable Gate

SCALE: 3" = 1'-0"

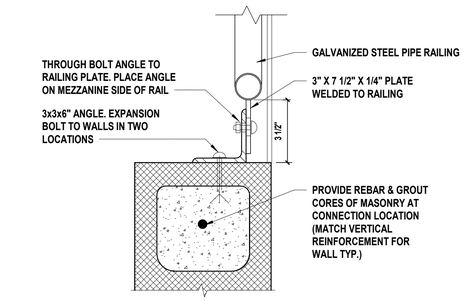

3 Typical Railing to Wall Attachment Plan at Mezzanine

SCALE: 3" = 1'-0"

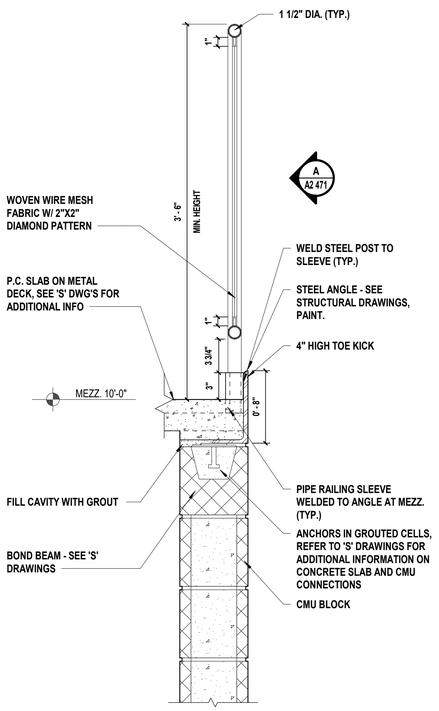

4 Mezzanine Railing Section Detail

SCALE: 1 1/2" = 1'-0"

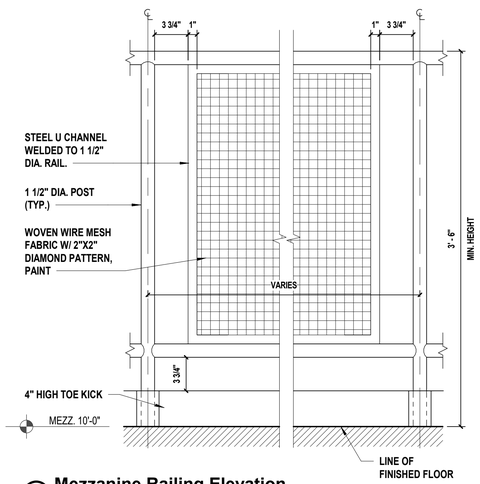

A Mezzanine Railing Elevation

SCALE: 1 1/2" = 1'-0"

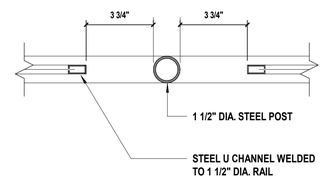

B Mezzanine Railing Plan

SCALE: 3" = 1'-0"

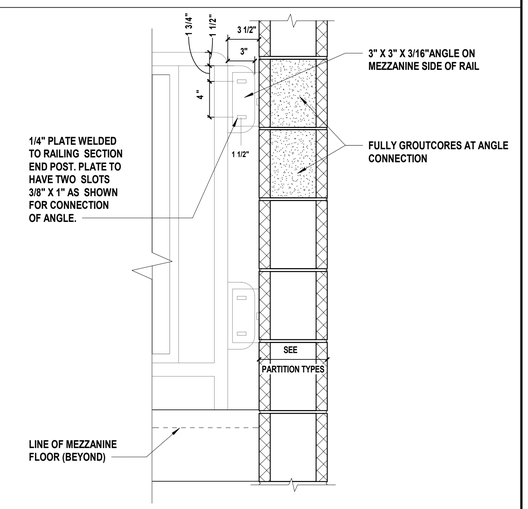

5 Elevation at Railing to wall connection

SCALE: 1 1/2" = 1'-0"

NOTE:

1. ALL STEEL COMPONENTS ON THIS SHEET TO BE HOT DIPPED GALVANIZED.

H 2 M architects + engineers

538 Broad Hollow Road, 4th Floor East
Melville, NY 11747
631.756.8000 • www.h2m.com

CONSULTANTS:

MARK	DATE	DESCRIPTION

REGISTERED ARCHITECT ROBERT B. FOX 032389 STATE OF NEW YORK

*ALTERATION OF THIS DOCUMENT EXCEPT BY A LICENSED PROFESSIONAL IS ILLEGAL.

DESIGNED BY:	DRAWN BY:	CHECKED BY:	REVIEWED BY:
KEM	JHG		

PROJECT No:	DATE:	SCALE:
VGFD2001	JULY 2022	AS SHOWN

CLIENT

VAILS GATE FIRE DISTRICT

New Storage Building (Phase I)
New Fire Station (Phase II)

872 Blooming Grove Turnpike
New Windsor, NY 12553

CONTRACT

CONTRACT G
GENERAL CONSTRUCTION

STATUS

FINAL BID DOCUMENT

SHEET TITLE

ARCHITECTURE
MEZZANINE DETAILS AND NOTES
NEW FIRE STATION
PHASE 2

DRAWING No.

A2 471.00

C:\Users\jguzman\Documents\VGFD2001_Central21_A_jguzman.rvt

7/18/2022 8:20:29 AM

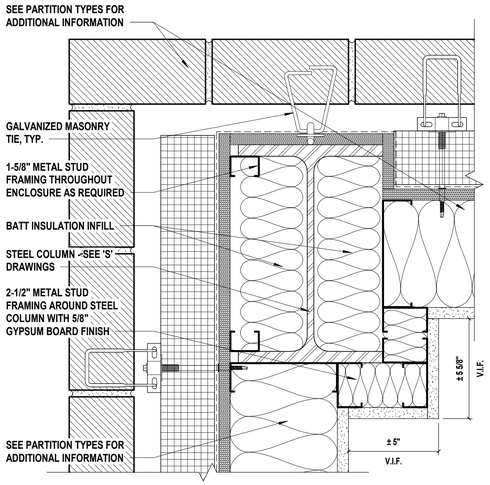

1 **Exterior Enlarged Column Detail**
SCALE: 3" = 1'-0"

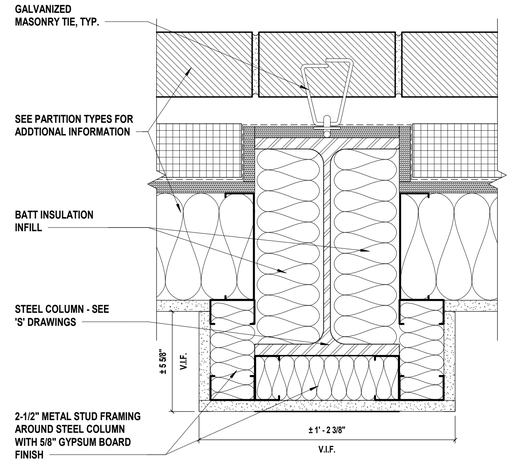

2 **Exterior Enlarged Column Detail**
SCALE: 3" = 1'-0"

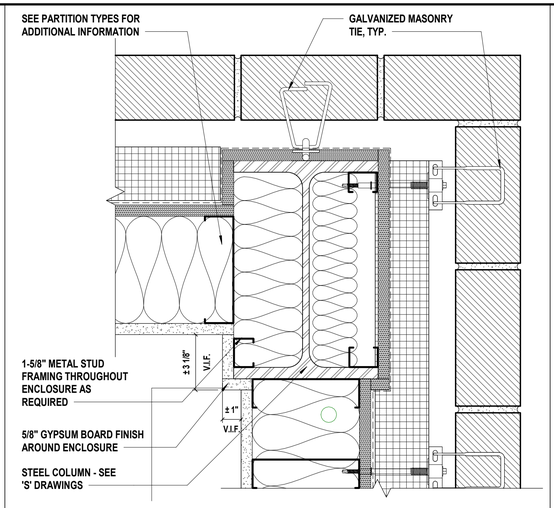

3 **Exterior Enlarged Column Detail**
SCALE: 3" = 1'-0"

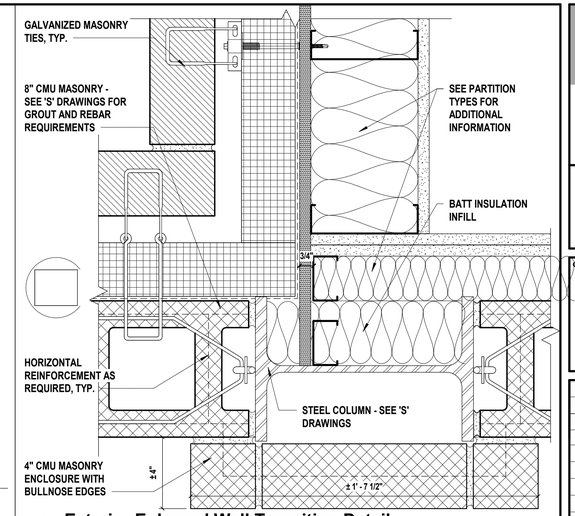

4 **Exterior Enlarged Wall Transition Detail**
SCALE: 3" = 1'-0"

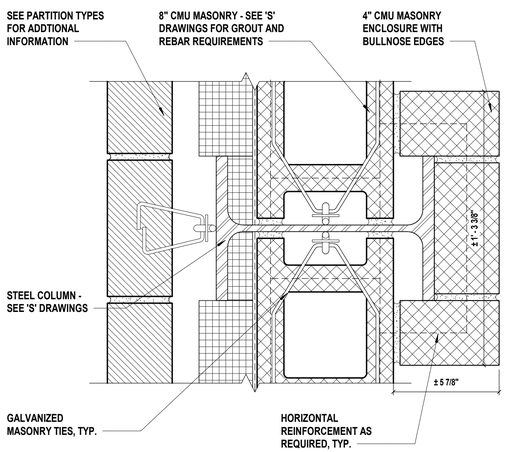

5 **Exterior Enlarged Column Detail**
SCALE: 3" = 1'-0"

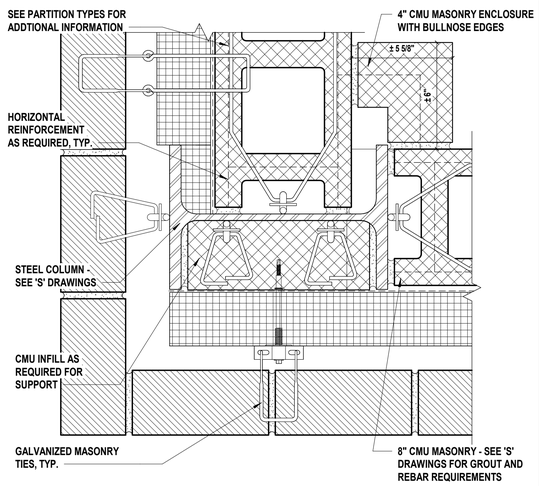

6 **Exterior Enlarged Column Detail**
SCALE: 3" = 1'-0"

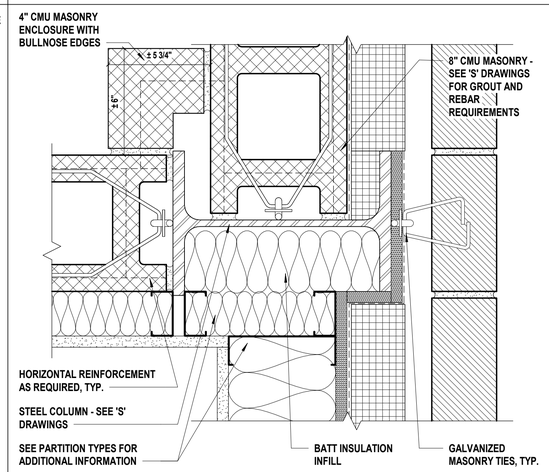

7 **Exterior Enlarged Wall Transition Detail**
SCALE: 3" = 1'-0"

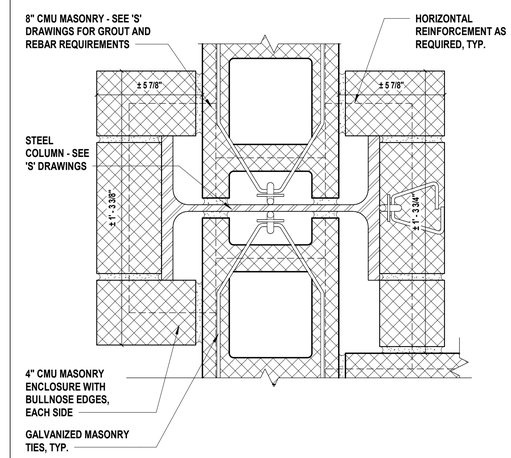

8 **Interior Enlarged Column Detail**
SCALE: 3" = 1'-0"

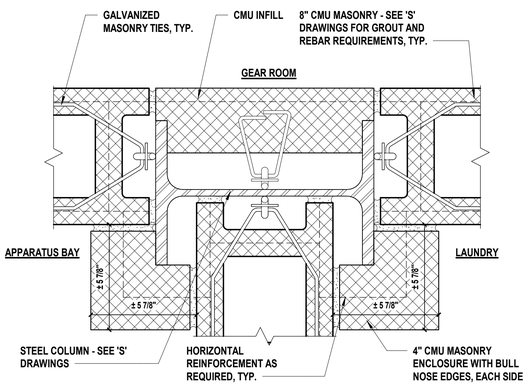

9 **Interior Enlarged Column Detail**
SCALE: 3" = 1'-0"

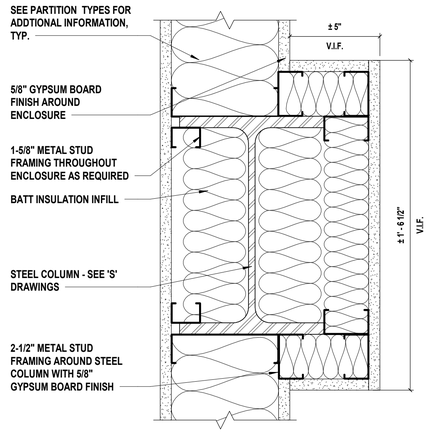

10 **Interior Enlarged Column Detail**
SCALE: 3" = 1'-0"

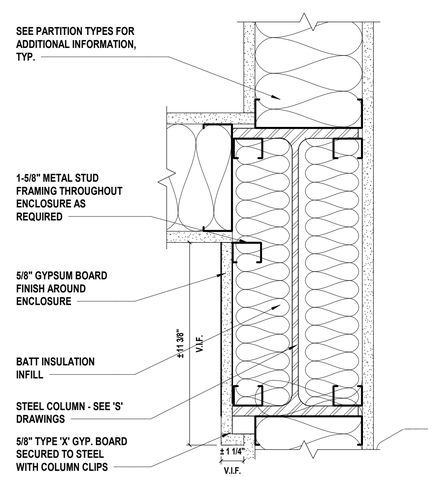

11 **Interior Enlarged Column Detail**
SCALE: 3" = 1'-0"

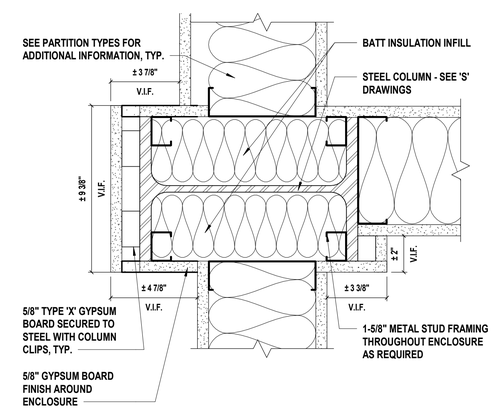

12 **Interior Enlarged Column Detail**
SCALE: 3" = 1'-0"

C:\Users\jgizman\Documents\VGFD2001_Central21_A_jgizman.rvt

7/19/2022 8:20:35 AM

H 2 M architects + engineers

538 Broad Hollow Road, 4th Floor East
Melville, NY 11747
631.756.8000 • www.h2m.com

CONSULTANTS:

MARK	DATE	DESCRIPTION

REGISTERED ARCHITECT ROBERT BEE 032389 STATE OF NEW YORK

*ALTERATION OF THIS DOCUMENT EXCEPT BY A LICENSED PROFESSIONAL IS ILLEGAL.

DESIGNED BY:	DRAWN BY:	CHECKED BY:	REVIEWED BY:
KEM	JHG		
PROJECT No: VGFD2001	DATE: JULY 2022	SCALE: AS SHOWN	

CLIENT

VAILS GATE FIRE DISTRICT

New Storage Building (Phase I)
New Fire Station (Phase II)

872 Blooming Grove Turnpike
New Windsor, NY 12553

CONTRACT

CONTRACT G
GENERAL CONSTRUCTION

STATUS

FINAL BID DOCUMENT

SHEET TITLE

ARCHITECTURE
WALL TRANSITION AND COLUMN DETAILS
NEW FIRE STATION
PHASE 2

DRAWING No.

A2 500.00

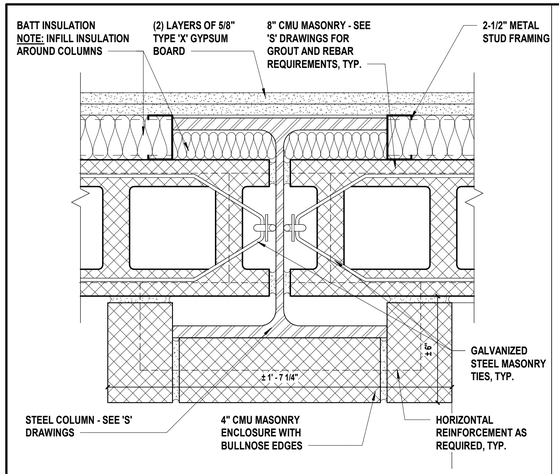

1 Interior Enlarged Column Detail
SCALE: 3" = 1'-0"

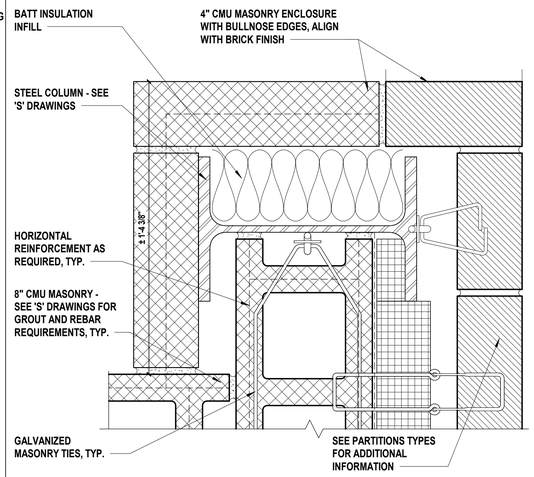

2 Exterior Enlarged Column Detail
SCALE: 3" = 1'-0"

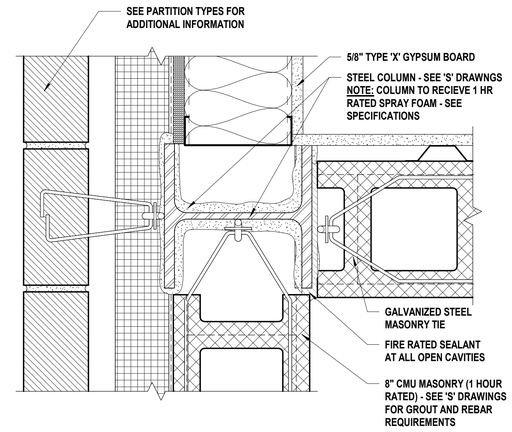

3 Exterior Enlarged Column Detail
SCALE: 3" = 1'-0"

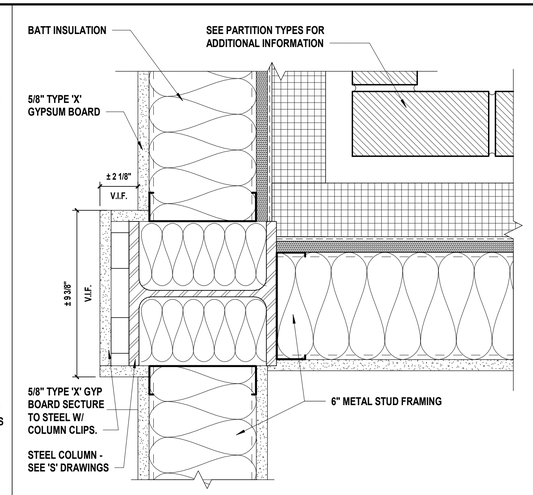

4 Interior Enlarged Column Detail
SCALE: 3" = 1'-0"

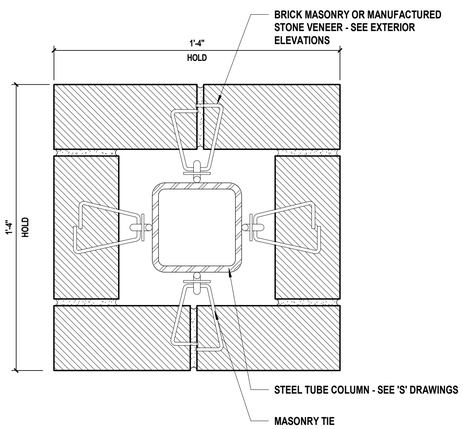

5 Exterior Enlarged Column Detail
SCALE: 3" = 1'-0"

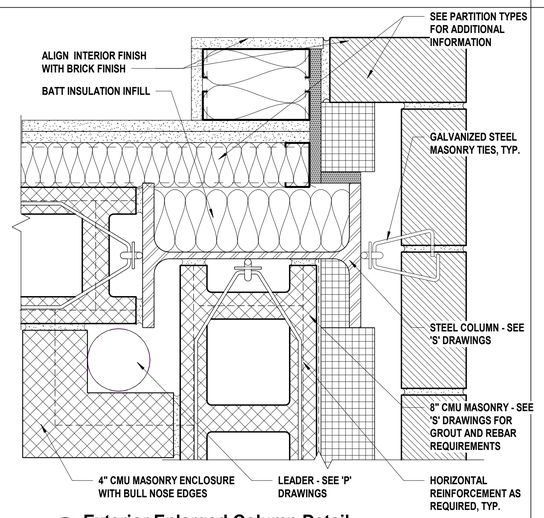

6 Exterior Enlarged Column Detail
SCALE: 3" = 1'-0"

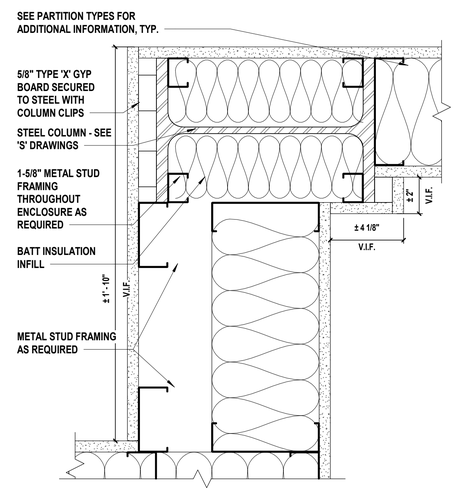

7 Interior Enlarged Column Detail
SCALE: 3" = 1'-0"

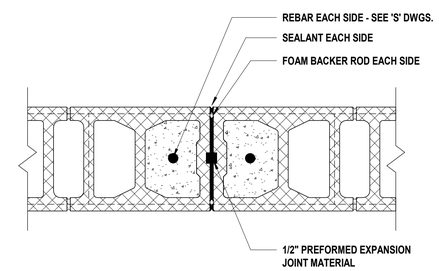

8 Typ. Control/Expansion Joint Detail
SCALE: 1 1/2" = 1'-0"

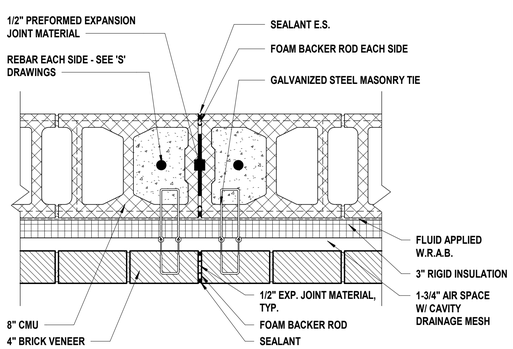

9 Typ. Control/Expansion Joint Detail
SCALE: 1 1/2" = 1'-0"

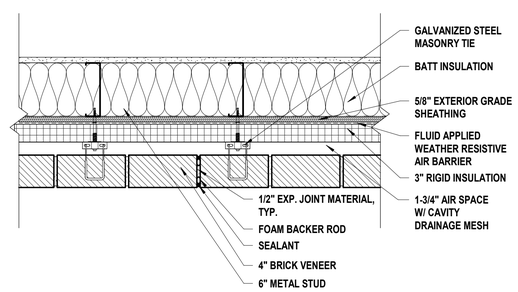

10 Typ. Control/Expansion Joint Detail
SCALE: 1 1/2" = 1'-0"

H 2 M architects + engineers

538 Broad Hollow Road, 4th Floor East
Melville, NY 11747
631.756.8000 • www.h2m.com

CONSULTANTS:

MARK	DATE	DESCRIPTION

REGISTERED ARCHITECT ROBERT BEER 032389 STATE OF NEW YORK

*ALTERATION OF THIS DOCUMENT EXCEPT BY A LICENSED PROFESSIONAL IS ILLEGAL.

DESIGNED BY:	DRAWN BY:	CHECKED BY:	REVIEWED BY:
KEM	JHG		
PROJECT No: VGFD2001	DATE: JULY 2022		SCALE: AS SHOWN

CLIENT

VAILS GATE FIRE DISTRICT

New Storage Building (Phase I)
New Fire Station (Phase II)

872 Blooming Grove Turnpike
New Windsor, NY 12553

CONTRACT
CONTRACT G
GENERAL CONSTRUCTION

STATUS
FINAL BID DOCUMENT

SHEET TITLE
ARCHITECTURE
WALL TRANSITION AND COLUMN DETAILS
NEW FIRE STATION
PHASE 2

DRAWING No.
A2 501.00

C:\Users\jguzman\Documents\VGFD2001_Central21_A_jguzman.rvt

7/18/2022 8:20:39 AM

GENERAL WINDOW NOTES

1. VERIFY ALL WINDOW OPENINGS, REQUIRED CLEARANCES, MEANS OF ATTACHEMENT, AND INSTALLATION PRIOR TO PURCHASE.
2. ALL MULTIPLE UNIT WINDOWS ARE TO BE FACTORY MULLIED - FIELD MILLED UNITS WILL NOT BE PERMITTED.
3. RE-CAULK ALL LINTELS AFTER WINDOW INSTALLATION.
4. SEE EXTERIOR ELEVATIONS ON A2 200 AND A2 201 FOR ADDITIONAL INFORMATION.

WINDOW SCHEDULE

MARK	WINDOW TYPE	FRAME TYPE	ROUGH DIMENSIONS		UNIT DIMENSIONS		DETAILS			GLAZING TYPE	COMMENTS
			WIDTH	HEIGHT	WIDTH	HEIGHT	HEAD	JAMB	SILL		
A	DOUBLE-HUNG	FIBERGLASS/WOOD COMPOSITE	3' - 0 1/2"	5' - 0 1/4"	3' - 0"	5' - 0"	WH2	WJ2	WS2	LOW-E	
B1	DOUBLE-HUNG	FIBERGLASS/WOOD COMPOSITE	9' - 0 1/2"	5' - 0 1/4"	9' - 0"	5' - 0"	WH2	WJ2	WS2	LOW-E	
B2	DOUBLE-HUNG	FIBERGLASS/WOOD COMPOSITE	9' - 0 1/2"	5' - 0 1/4"	9' - 0"	5' - 0"	WH2	WJ2	WS2	LOW-E	PRIVACY GLAZING
C	FIXED	FIBERGLASS/WOOD COMPOSITE	6' - 1"	2' - 3 5/8"	6' - 0"	2' - 3 1/8"	WH1	WJ1	WS1	LOW-E	
D	FIXED	FIBERGLASS/WOOD COMPOSITE	4' - 1"	2' - 3 5/8"	4' - 0"	2' - 3 1/8"	WH1	WJ1	WS1	LOW-E	
E	DOUBLE-HUNG	FIBERGLASS/WOOD COMPOSITE	3' - 0 1/2"	5' - 8 1/4"	3' - 0"	5' - 8"	WH2	WJ2	WS2	LOW-E	

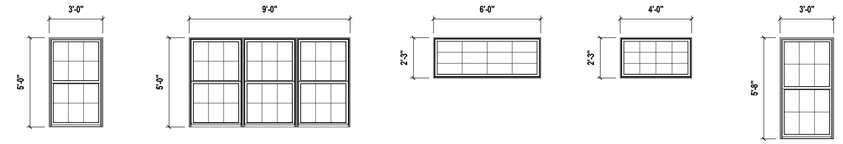

WINDOW TYPE 'A' | WINDOW TYPE 'B1 & B2' | WINDOW TYPE 'C' | WINDOW TYPE 'D' | WINDOW TYPE 'E'

Window Types

SCALE: 1/4" = 1'-0"

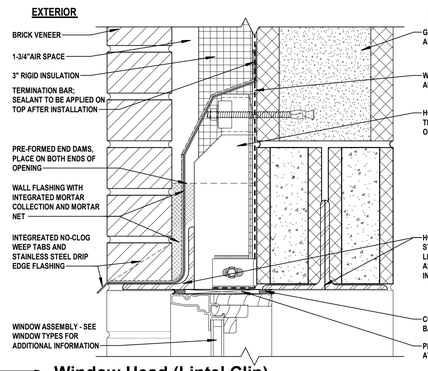

WH1 Window Head (Lintel Clip)
SCALE: 3" = 1'-0" H2M Ref # WH3C-003

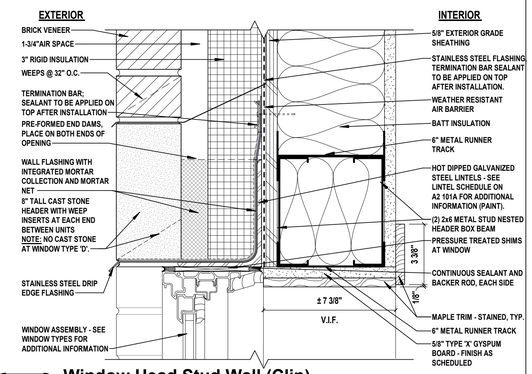

WH2 Window Head Stud Wall (Clip)
SCALE: 3" = 1'-0" H2M Ref # WH13-026

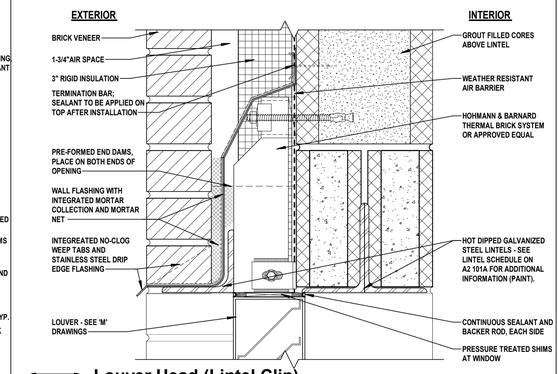

LH1 Louver Head (Lintel Clip)
SCALE: 3" = 1'-0" H2M Ref # WH3C-003

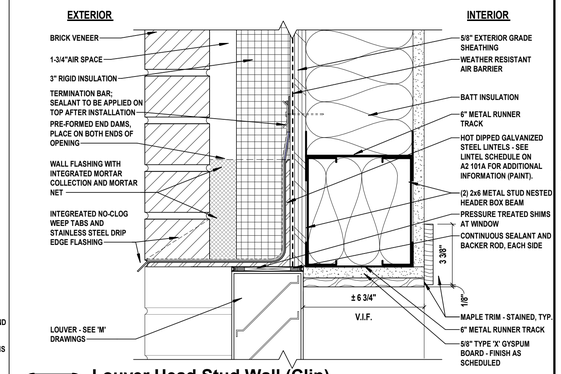

LH2 Louver Head Stud Wall (Clip)
SCALE: 3" = 1'-0" H2M Ref # WH13-026

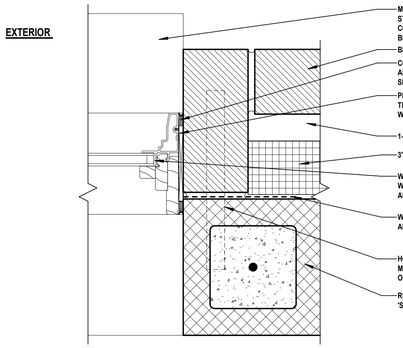

WJ1 Window Jamb
SCALE: 3" = 1'-0" H2M Ref # WJ3-003

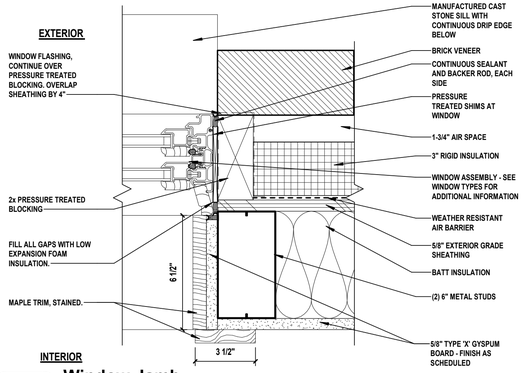

WJ2 Window Jamb
SCALE: 3" = 1'-0" H2M Ref # WJ13-026

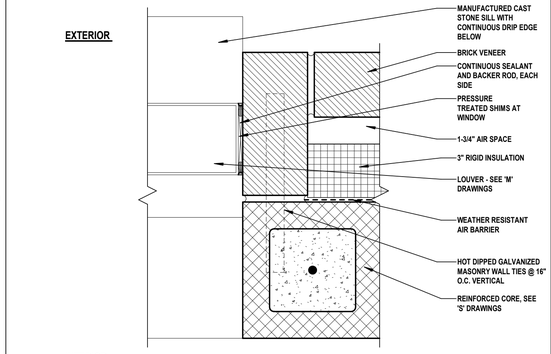

LJ1 Louver Jamb
SCALE: 3" = 1'-0" H2M Ref # WJ3-003

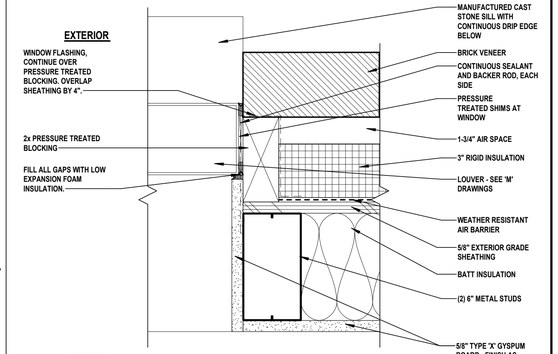

LJ2 Louver Jamb
SCALE: 3" = 1'-0" H2M Ref # WJ13-026

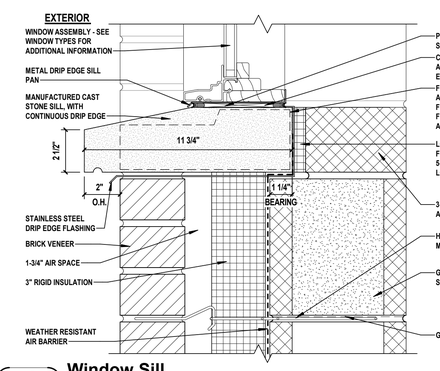

WS1 Window Sill
SCALE: 3" = 1'-0" H2M Ref # WS3-003

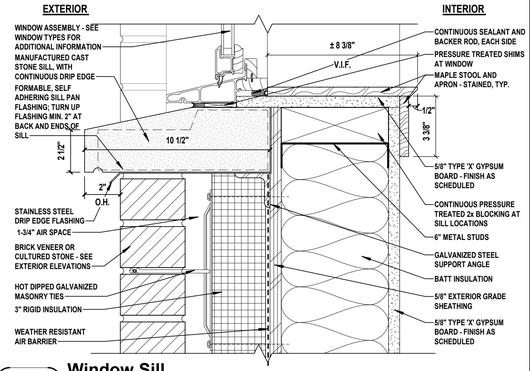

WS2 Window Sill
SCALE: 3" = 1'-0" H2M Ref # WS13-026

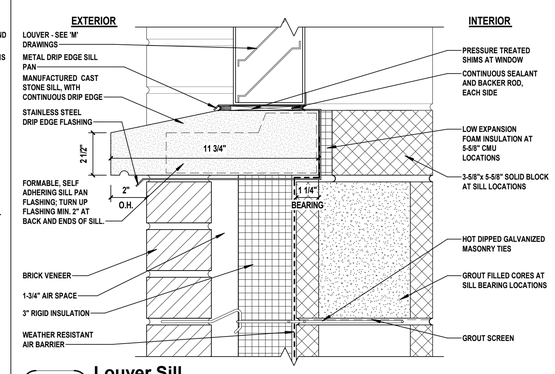

LS1 Louver Sill
SCALE: 3" = 1'-0" H2M Ref # WS3-003

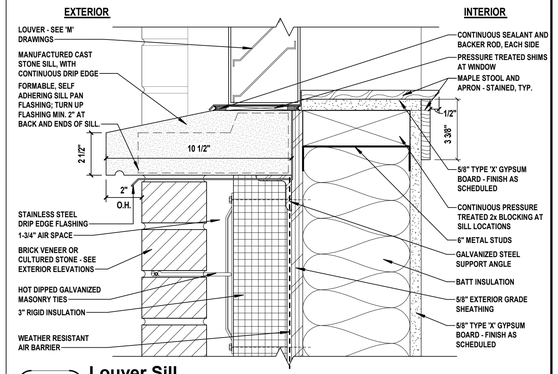

LS2 Louver Sill
SCALE: 3" = 1'-0" H2M Ref # WS13-026

H2M architects + engineers
538 Broad Hollow Road, 4th Floor East
Melville, NY 11747
631.756.8000 • www.h2m.com

CONSULTANTS:

MARK	DATE	DESCRIPTION

REGISTERED ARCHITECT ROBERT BEE 032389 STATE OF NEW YORK

*ALTERATION OF THIS DOCUMENT EXCEPT BY A LICENSED PROFESSIONAL IS ILLEGAL.

DESIGNED BY:	DRAWN BY:	CHECKED BY:	REVIEWED BY:
KEM	JHG		

PROJECT No:	DATE:	SCALE:
VGFD2001	JULY 2022	AS SHOWN

CLIENT

VAILS GATE FIRE DISTRICT

New Storage Building (Phase I)
New Fire Station (Phase II)

872 Blooming Grove Turnpike
New Windsor, NY 12553

CONTRACT
CONTRACT G
GENERAL CONSTRUCTION

STATUS
FINAL BID DOCUMENT

SHEET TITLE
ARCHITECTURE
WINDOW SCHEDULE, TYPES, DETAILS, AND NOTES
NEW FIRE STATION
PHASE 2

DRAWING No.
A2 510.00

C:\Users\jguzman\Documents\VGFD2001_Central2_A_jguzman.rvt
7/18/2022 8:20:46 AM

DOOR SCHEDULE

DOOR NO.	FROM ROOM NAME	FROM ROOM NUMBER	TO ROOM NAME	TO ROOM NUMBER	DOOR SIZE WIDTH	DOOR SIZE HEIGHT	DOOR SIZE THICKNESS	DOOR TYPE	DOOR MATERIAL	DOOR FINISH	FRAME TYPE	FRAME MATERIAL	FRAME FINISH	DETAILS HEAD	DETAILS JAMB	DETAILS SADDLE	FIRE RATING	HARDWARE SET	SECURITY ACCESS	SELF CLOSING	DOOR SIGNAGE	WEATHER STRIPPING	PANIC HARDWARE	COMMENTS
101A	EXTERIOR	EXT.	APPARATUS ROOM	101	36"	84"	1 3/4"	7	HM	PAINT	F2	HM	PAINT	DH1	DJ1	DS7	-	HS1	-	•	-	•	•	
101B	EXTERIOR	EXT.	APPARATUS ROOM	101	36"	84"	1 3/4"	7	HM	PAINT	F2	HM	PAINT	DH1	DJ1	DS7	-	HS1	-	•	-	•	•	
101C	APPARATUS ROOM	101	CORRIDOR	113	(2) 36" + 24"	84"	1 3/4"	2	HM	PAINT	F2	HM	PAINT	DH4	DJ4	DS6	1 HR	HS7	-	•	•	-	-	VISION PANEL
102	APPARATUS ROOM	101	RADIO ROOM	102	36"	84"	1 3/4"	7	HM	PAINT	F2	HM	PAINT	DH4	DJ4	DS6	1 HR	HS5A	-	•	•	•	-	
103A	APPARATUS ROOM	101	STORAGE 1	103	(2) 36" + 24"	84"	1 3/4"	2	HM	PAINT	F2	HM	PAINT	DH3	DJ3	-	1 HR	HS7	-	•	•	-	-	
103B	EXTERIOR	EXT.	STORAGE 1	103	(2) 36" + 24"	84"	1 3/4"	2	HM	PAINT	F2	HM	PAINT	DH1	DJ1	DS7	-	HS7A	-	-	-	•	-	
104	APPARATUS ROOM	101	STORAGE 2	104	36"	84"	1 3/4"	1	HM	PAINT	F2	HM	PAINT	DH3	DJ3	-	1 HR	HS3B	-	•	•	-	-	
105A	APPARATUS ROOM	101	DECON ROOM	105	36"	84"	1 3/4"	6	HM	PAINT	F2	HM	PAINT	DH3	DJ3	-	1 HR	HS4	-	•	•	-	-	
105B	EXTERIOR	EXT.	DECON ROOM	105	36"	84"	1 3/4"	1	HM	PAINT	F2	HM	PAINT	DH1	DJ1	DS7	-	HS14	-	•	•	-	-	
106	APPARATUS ROOM	101	LAUNDRY	106	(2) 36" + 24"	84"	1 3/4"	2	HM	PAINT	F2	HM	PAINT	DH3	DJ3	-	-	HS7	-	-	•	-	-	VISION PANEL AND LOUVER
107A	APPARATUS ROOM	101	GEAR ROOM	107	36"	84"	1 3/4"	7	HM	PAINT	F2	HM	PAINT	DH3	DJ3	-	1 HR	HS2	-	•	•	•	-	
107B	APPARATUS ROOM	101	GEAR ROOM	107	36"	84"	1 3/4"	7	HM	PAINT	F2	HM	PAINT	DH3	DJ3	-	1 HR	HS2	-	•	•	•	-	
107C	EXTERIOR	EXT.	GEAR ROOM	107	36"	84"	1 3/4"	7	HM	PAINT	F2	HM	PAINT	DH1	DJ1	DS7	-	HS1	-	•	-	•	•	
107D	GEAR ROOM	107	CORRIDOR	113	36"	84"	1 3/4"	7	HM	PAINT	F2	HM	PAINT	DH4	DJ4	DS6	1 HR	HS2	-	•	•	-	-	
108	APPARATUS ROOM	101	TOILET ROOM	108	36"	84"	1 3/4"	6	HM	PAINT	F2	HM	PAINT	DH3	DJ3	DS6	-	HS4	-	•	•	-	-	
109	APPARATUS ROOM	101	SCBA	109	(2) 36" + 24"	84"	1 3/4"	2	HM	PAINT	F2	HM	PAINT	DH3	DJ3	DS6	-	HS7	-	-	•	-	-	VISION PANEL AND LOUVER
111	CORRIDOR	113	SPARE TURNOUT GEAR	111	36"	84"	1 3/4"	6	HM	PAINT	F1	HM	PAINT	DH4	DJ4	DS6	1 HR	HS3	-	•	•	-	-	
112A	EXTERIOR	EXT.	VENDOR DROP OFF	112	36"	84"	1 3/4"	3	HM	PAINT	F2	HM	PAINT	DH2	DJ2	DS5	-	HS14	-	•	•	•	-	
112B	VENDOR DROP OFF	112	CORRIDOR	113	36"	84"	1 3/4"	3	HM	PAINT	F1	HM	PAINT	DH5	DJ5	-	-	HS3A	-	-	•	-	-	NOT AN EXIT SIGNAGE
113A	CORRIDOR	113	STAIR 'A'	A	36"	84"	1 3/4"	7	WD	STAIN	F1	HM	PAINT	DH5	DJ5	-	1 HR	HS6	-	•	•	-	•	
113B	EXTERIOR	EXT.	STAIR 'A'	A	36"	84"	1 3/4"	7	HM	PAINT	F2	HM	PAINT	DH2	DJ2	DS5	-	HS1	-	•	-	•	•	
114	CORRIDOR	113	QUARTERMASTER	114	36"	84"	1 3/4"	6	WD	STAIN	F1	HM	PAINT	DH5	DJ5	DS6	1 HR	HS3B	-	•	•	-	-	
115	CORRIDOR	113	JANITORS CLOSET	115	36"	84"	1 3/4"	6	WD	STAIN	F1	HM	PAINT	DH5	DJ5	DS4	-	HS3B	-	-	•	-	-	
116A	CORRIDOR	113	MEETING ROOM	116	36"	84"	1 3/4"	5	WD	STAIN	F1	HM	PAINT	DH5	DJ5	-	-	HS3A	-	•	•	-	-	NOT AN EXIT SIGNAGE
116B	EXTERIOR	EXT.	MEETING ROOM	116	36"	84"	1 3/4"	7	WD	STAIN	F1	HM	PAINT	DH2	DJ2	DS5	-	HS1	-	•	-	•	•	
116C	LOBBY	125A	MEETING ROOM	116	(2) 36"	84"	1 1/2"	5	WD	STAIN	F1	HM	PAINT	DH5	DJ5	DS8	1 HR	HS10	-	•	•	-	•	
117	MEETING ROOM	116	STORAGE	117	(2) 36" + 24"	84"	1 3/4"	2	WD	STAIN	F1	HM	PAINT	DH5	DJ5	-	1 HR	HS7	-	•	•	-	-	LOUVER
118A	CORRIDOR	113	KITCHEN	118	36"	84"	1 3/4"	1	WD	STAIN	F1	HM	PAINT	DH5	DJ5	DS2	-	HS3A	-	•	•	-	-	NOT AN EXIT SIGNAGE
118B	MEETING ROOM	116	KITCHEN	118	36"	84"	1 3/4"	5	WD	STAIN	F1	HM	PAINT	DH5	DJ5	DS2	-	HS5A	-	-	•	-	-	
119	KITCHEN	118	PANTRY	119	36"	84"	1 3/4"	6	WD	STAIN	F1	HM	PAINT	DH5	DJ5	DS2	1 HR	HS3	-	•	•	-	-	
120	CORRIDOR	113	READY ROOM	120	36"	84"	1 3/4"	3	WD	STAIN	F1	HM	PAINT	DH5	DJ5	DS6	-	HS5	-	-	•	-	-	
121	CORRIDOR	113	MECHANICAL ROOM	121	(2) 36" + 24"	84"	1 3/4"	2	WD	STAIN	F1	HM	PAINT	DH5	DJ5	DS4	1 HR	HS7	-	•	•	-	-	
122	CORRIDOR	113	ELECTRICAL ROOM	122	36"	84"	1 3/4"	1	WD	STAIN	F1	HM	PAINT	DH5	DJ5	DS4	1 HR	HS8	-	•	•	-	-	
123	CORRIDOR	113	ELEVATOR LOBBY	123	36"	84"	1 3/4"	7	WD	STAIN	F1	HM	PAINT	DH5	DJ5	DS6	-	HS6A	-	•	-		•	
125A	LOBBY	125A	ELEVATOR LOBBY	123	36"	84"	1 3/4"	7	WD	STAIN	F1	HM	PAINT	DH5	DJ5	DS6	1 HR	HS6	-	•	-	-	•	
125B	LOBBY	125A	CLOSET	125B	(2) 30"	84"	1 3/4"	6	WD	STAIN	F1	HM	PAINT	DH5	DJ5	DS6	-	HS9	-	-	•	-	-	
126A	EXTERIOR	EXT.	VESTIBULE	126	72"	84"	1 3/4"	4	ALM	AN	F1	ALM	AN	DH5	DJ5	DS1	-	HS11	-	•	-	•	•	STOREFRONT SYSTEM - 1" INSULATED GLAZING
126B	LOBBY	125A	VESTIBULE	126	72"	84"	1 3/4"	4	ALM	AN	F1	ALM	AN	DH5	DJ5	DS3	-	HS11A	-	•	-	-	-	STOREFRONT SYSTEM - 1/4" GLAZING
127	LOBBY	125A	MEN'S TOILET ROOM	127	36"	84"	1 3/4"	6	WD	STAIN	F1	HM	PAINT	DH5	DJ5	DS3	1 HR	HS2	-	•	•	-	-	
128	LOBBY	125A	WOMEN'S TOILET ROOM	128	36"	84"	1 3/4"	6	WD	STAIN	F1	HM	PAINT	DH5	DJ5	DS3	1 HR	HS2	-	•	•	-	-	
OH1	EXTERIOR	EXT.	APPARATUS ROOM	101	168"	168"	3"	O-1	MFR.	MFR.	MFR.	MFR.	MFR.	1/A2 522	2/A2 522	3/A2 522	-	-	-	-	-	-	-	
OH2	EXTERIOR	EXT.	APPARATUS ROOM	101	168"	168"	3"	O-1	MFR.	MFR.	MFR.	MFR.	MFR.	1/A2 522	2/A2 522	3/A2 522	-	-	-	-	-	-	-	
OH3	EXTERIOR	EXT.	APPARATUS ROOM	101	168"	168"	3"	O-1	MFR.	MFR.	MFR.	MFR.	MFR.	1/A2 522	2/A2 522	3/A2 522	-	-	-	-	-	-	-	
OH4	EXTERIOR	EXT.	APPARATUS ROOM	101	168"	168"	3"	O-1	MFR.	MFR.	MFR.	MFR.	MFR.	1/A2 522	2/A2 522	3/A2 522	-	-	-	-	-	-	-	
OH5	EXTERIOR	EXT.	APPARATUS ROOM	101	168"	168"	3"	O-1	MFR.	MFR.	MFR.	MFR.	MFR.	1/A2 522	2/A2 522	3/A2 522	-	-	-	-	-	-	-	
OH6	EXTERIOR	EXT.	APPARATUS ROOM	101	168"	168"	3"	O-2	MFR.	MFR.	MFR.	MFR.	MFR.	1/A2 522	2/A2 522	3/A2 522	-	-	-	-	-	-	-	
201	CORRIDOR	201	STAIR 'B'	B	36"	84"	1 3/4"	1	WD	STAIN	F1	HM	PAINT	DH5	DJ5	DS6	1 HR	HS6	-	•	•	-	•	
202	CORRIDOR	201	CONFERENCE ROOM	202	36"	84"	1 3/4"	1	WD	STAIN	F1	HM	PAINT	DH5	DJ5	DS6	-	HS5A	-	-	•	-	-	
203A	COMPANY ROOM	203A	CORRIDOR	201	36"	84"	1 3/4"	1	WD	STAIN	F1	HM	PAINT	DH5	DJ5	DS6	-	HS5	-	-	•	-	-	
203B	COMPANY ROOM	203A	TRAINING ROOM	206	36"	84"	1 3/4"	7	WD	STAIN	F1	HM	PAINT	DH5	DJ5	DS6	-	HS5A	-	-	•	-	-	
204	COMPANY ROOM	203A	STORAGE	204	36"	84"	1 3/4"	6	WD	STAIN	F1	HM	PAINT	DH5	DJ5	DS6	1 HR	HS3	-	•	•	-	-	
205	TRAINING ROOM	206	STORAGE	205	(2) 36" + 24"	84"	1 3/4"	2	WD	STAIN	F1	HM	PAINT	DH5	DJ5	DS6	1 HR	HS7	-	•	•	-	-	
206A	CORRIDOR	201	TRAINING ROOM	206	36"	84"	1 3/4"	7	WD	STAIN	F1	HM	PAINT	DH5	DJ5	DS6	-	HS5	-	•	•	-	•	
206B	TRAINING ROOM	206	STAIR 'A'	A	36"	84"	1 3/4"	7	WD	STAIN	F1	HM	PAINT	DH5	DJ5	DS6	1 HR	HS6A	-	•	•	-	•	
207A	CORRIDOR	210	EXCERCISE ROOM	207	(2) 36"	84"	1 1/2"	4	ALM	AN	F1	ALM	AN	DH5	DJ5	DS6	-	HS12	-	•	•	-	-	STOREFRONT SYSTEM - 1/4" GLAZING
207B	CORRIDOR	201	EXCERCISE ROOM	207	36"	84"	1 3/4"	4	ALM	AN	F1	ALM	AN	DH5	DJ5	DS6	-	HS13	-	•	•	-	-	STOREFRONT SYSTEM - 1/4" GLAZING
208	CORRIDOR	201	BATHROOM	208	36"	84"	1 3/4"	6	WD	STAIN	F1	HM	PAINT	DH5	DJ5	DS2	-	HS4	-	•	•	-	-	
209	CORRIDOR	201	BATHROOM	209	36"	84"	1 3/4"	6	WD	STAIN	F1	HM	PAINT	DH5	DJ5	DS2	-	HS4	-	•	•	-	-	
210A	CORRIDOR	210	CORRIDOR	201	36"	84"	1 3/4"	7	WD	STAIN	F1	HM	PAINT	DH5	DJ5	DS6	-	HS6A	-	•	-	-	•	
210B	CORRIDOR	210	STAIR 'A'	A	36"	84"	1 3/4"	7	WD	STAIN	F1	HM	PAINT	DH5	DJ5	DS6	1 HR	HS6	-	•	•	-	•	
211	COMISSIONERS OFFICE	211	CORRIDOR	210	36"	84"	1 3/4"	1	WD	STAIN	F1	HM	PAINT	DH5	DJ5	DS6	-	HS15	-	-	•	-	-	
211B	CORRIDOR	210	MEZZANINE	221	(2) 36" + 24"	80"	1 3/4"	2	HM	PAINT	F2	HM	PAINT	DH5	DJ5	DS6	1 HR	HS7	-	•	•	•	-	VISION PANEL
212	CORRIDOR	210	TRUSTEES OFFICE	212	36"	84"	1 3/4"	1	WD	STAIN	F1	WD	PAINT	DH5	DJ5	DS6	-	HS15	-	-	•	-	-	
213	CORRIDOR	210	COMPANY OFFICERS	213	36"	84"	1 3/4"	1	WD	STAIN	F1	WD	PAINT	DH5	DJ5	DS6	-	HS15	-	-	•	-	-	
214	CORRIDOR	210	ASST. CHIEF OFFICE	214	36"	84"	1 3/4"	1	WD	STAIN	F1	WD	PAINT	DH5	DJ5	DS6	-	HS15	-	-	•	-	-	
215	CORRIDOR	210	CHIEF OFFICE	215	36"	84"	1 3/4"	1	WD	STAIN	F1	WD	PAINT	DH5	DJ5	DS6	-	HS15	-	-	•	-	-	
216	CORRIDOR	210	ADMIN STORAGE	216	36"	84"	1 3/4"	6	WD	STAIN	F1	WD	PAINT	DH5	DJ5	DS6	1 HR	HS3C	-	•	•	-	-	
217	CORRIDOR	210	RATED STORAGE 1	217	36"	84"	1 3/4"	6	WD	STAIN	F1	HM	PAINT	DH5	DJ5	DS6	1 HR	HS3A	-	•	•	-	-	
218	CORRIDOR	210	RATED STORAGE 2	218	36"	84"	1 3/4"	6	WD	STAIN	F1	HM	PAINT	DH5	DJ5	DS6	1 HR	HS3A	-	•	•	-	-	
219	CORRIDOR	210	NETWORK I.T.	219	36"	84"	1 3/4"	1	WD	STAIN	F1	HM	PAINT	DH5	DJ5	DS6	-	HS3C	-	-	•	-	-	
220	CORRIDOR	210	JANITORS CLOSET	220	36"	84"	1 3/4"	6	WD	STAIN	F1	HM	PAINT	DH5	DJ5	DS6	-	HS3B	-	-	•	-	-	

ABBREVIATIONS & SYMBOLS:

AN = ANODIZED | ALM = ALUMINUM | HM = HOLLOW METAL | WD = WOOD | • = APPLICABLE | - = NOT APPLICABLE

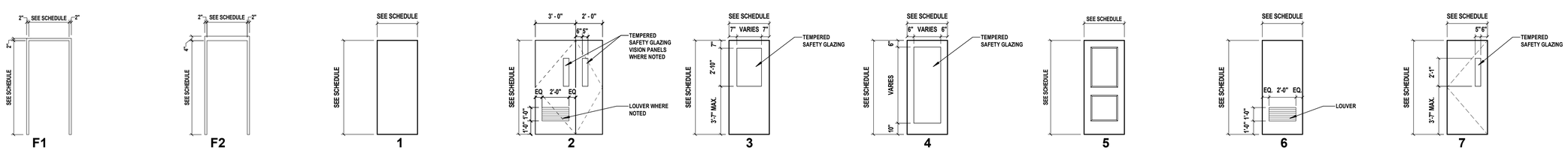

1 **Door & Frame Types**
SCALE: 1/4" = 1'-0"

H2M architects + engineers
538 Broad Hollow Road, 4th Floor East
Melville, NY 11747
631.756.8000 • www.h2m.com

CONSULTANTS:

MARK	DATE	DESCRIPTION
1	8/19/2022	ADDENDUM #1
2	12/22/2022	REVS. PER TOWN COMMENTS

REGISTERED ARCHITECT ROBERT BEE 032389 STATE OF NEW YORK

*ALTERATION OF THIS DOCUMENT EXCEPT BY A LICENSED PROFESSIONAL IS ILLEGAL

DESIGNED BY:	DRAWN BY:	CHECKED BY:	REVIEWED BY:
KEM	JHG		
PROJECT No:	DATE:	SCALE:	
VGFD2001	JULY 2022	AS SHOWN	

CLIENT

VAILS GATE FIRE DISTRICT

New Storage Building (Phase I)
New Fire Station (Phase II)

872 Blooming Grove Turnpike
New Windsor, NY 12553

CONTRACT
CONTRACT G
GENERAL CONSTRUCTION

STATUS
FINAL BID DOCUMENT

SHEET TITLE
ARCHITECTURE
NEW FIRE STATION
DOOR SCHEDULE, DOOR AND FRAME TYPES
PHASE 2

DRAWING No.
A2 520.02

C:\Users\jgiuzman\Documents\VGFD2001_Central21_A_jgiuzman8K622.rvt

12/22/2022 8:11:52 AM

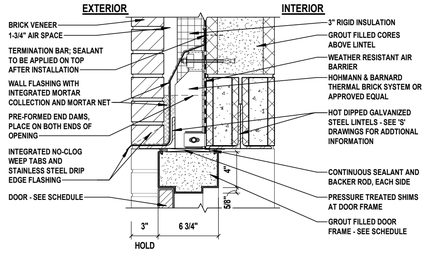

DH1 Door Head (Lintel)

SCALE: 1 1/2" = 1'-0" H2M Ref # DH3A-003

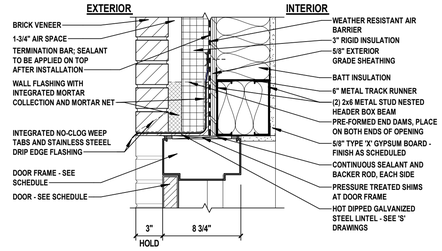

DH2 Door Head

SCALE: 1 1/2" = 1'-0" H2M Ref # DH22-027

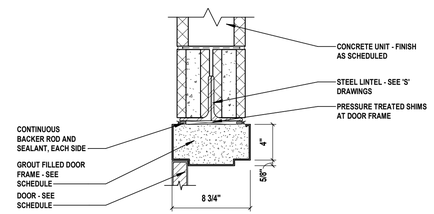

DH3 Door Head (Lintel)

SCALE: 1 1/2" = 1'-0" H2M Ref # DH51A-101

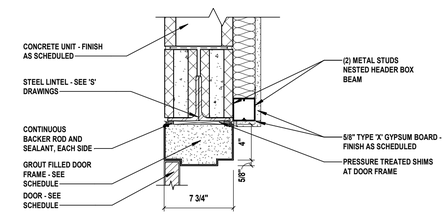

DH4 Door Head (Lintel)

SCALE: 1 1/2" = 1'-0" H2M Ref # DH54A-103

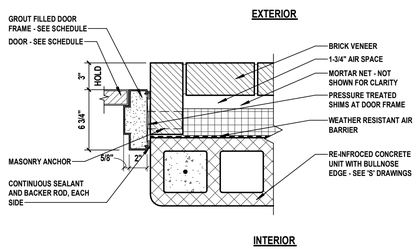

DJ1 Door Jamb (Ext. Return)

SCALE: 1 1/2" = 1'-0" H2M Ref # DJ3A-003

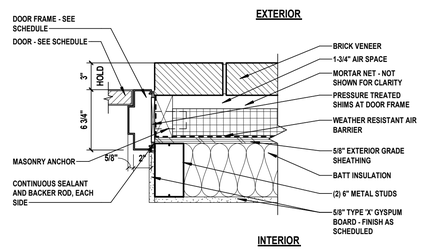

DJ2 Door Jamb

SCALE: 1 1/2" = 1'-0" H2M Ref # DJ22-027

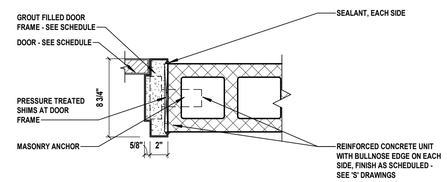

DJ3 Door Jamb

SCALE: 1 1/2" = 1'-0" H2M Ref # DJ51-101

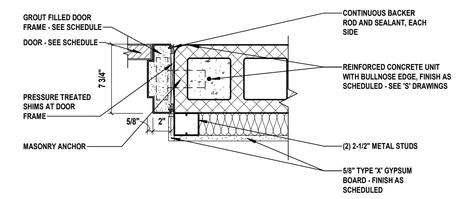

DJ4 Door Jamb

SCALE: 1 1/2" = 1'-0" H2M Ref # DJ54-103

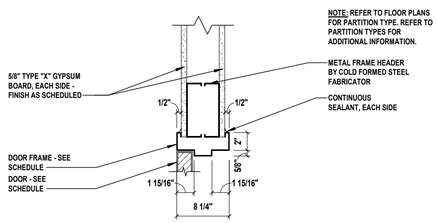

DH5 Door Head

SCALE: 1 1/2" = 1'-0" H2M Ref # DH67-132

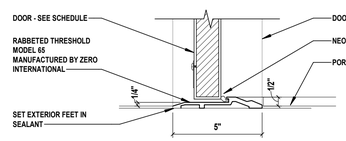

DS1 Saddle Detail

SCALE: 3" = 1'-0" H2M Ref # DS-003

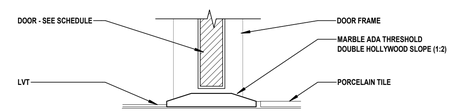

DS2 Saddle Detail

SCALE: 3" = 1'-0" H2M Ref # DS-009

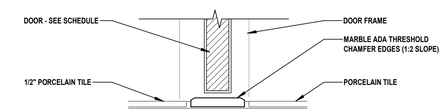

DS3 Saddle Detail

SCALE: 3" = 1'-0" H2M Ref # DS-012

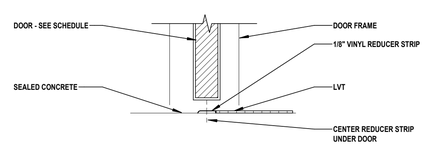

DS4 Saddle Detail

SCALE: 3" = 1'-0" H2M Ref # DS-006

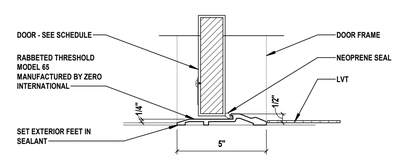

DS5 Saddle Detail

SCALE: 3" = 1'-0" H2M Ref # DS-003

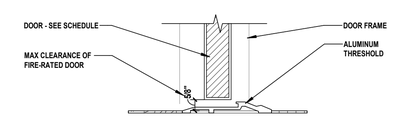

DS6 Saddle Detail

SCALE: 3" = 1'-0" H2M Ref # DS-005

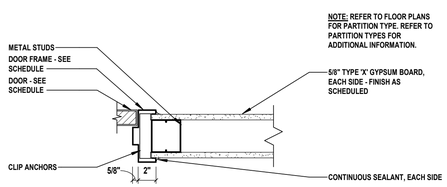

DJ5 Door Jamb

SCALE: 1 1/2" = 1'-0" H2M Ref # DJ67-132

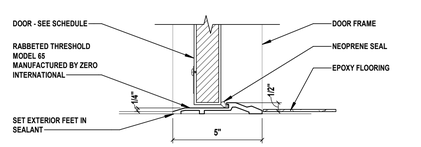

DS7 Saddle Detail

SCALE: 3" = 1'-0" H2M Ref # DS-003

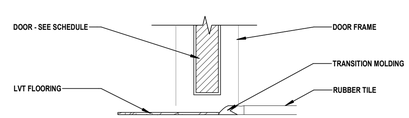

DS8 Saddle Detail

SCALE: 3" = 1'-0" H2M Ref # CE-001

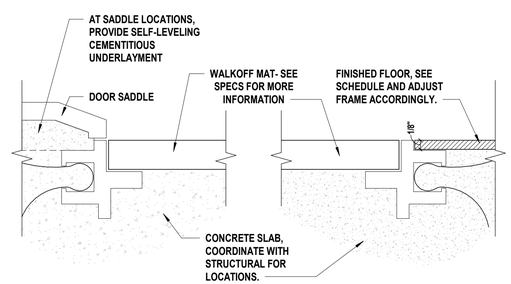

NOTE:
USE MUNSON FRAME TYPE 'C' FOR ALL WALKOFF MATS. ADJUST ACCORDINGLY BASED ON FINISH THICKNESS.

1 Walkoff Mat Detail

SCALE: 12" = 1'-0"

GENERAL DOOR NOTES

1. ALL DOOR FRAMES TO BE 4" FROM FINISHED WALL SURFACE UNLESS DIMENSIONED OR NOTED OTHERWISE.
2. ALL DOOR FROM PLACES OF ASSEMBLY (ROOMS WITH GREATER THAN 50 PERSONS) SEE CODE PLAN, ARE TO RECEIVE PANIC DEVICE HARDWARE. UNLESS NOTED OTHERWISE.
3. ALL INTERIOR DOORS SHALL HAVE A 1/2" UNDERCUT. UNDERCUT SHALL BE MEASURED FROM THE TOP OF SADDLE. CONTRACTOR TO VERIFY IN FIELD AND COORDINATE WITH FINISHES.
4. EVERY ROOM OR SPACE USED AS AN ASSEMBLY OCCUPANCY, SHALL HAVE THE OCCUPANT LOAD OF THE ROOM / SPACE CONSPICUOUSLY POSTED NEAR THE MAIN EXIT OF THE ROOM / SPACE.
5. TACTILE EXIT SIGNAGE SHALL BE PROVIDED ADJACENT TO EACH DOOR SERVING AN EXIT STAIRWAY, EXIT PASSAGEWAY OR EXIT DISCHARGE AS DETERMINED BY THE FIRE MARSHALL / AUTHORITY HAVING JURISDICTION.
6. ALL DOOR FRAMES WITHIN A MASONRY WALL SHALL HAVE A 4" HEAD.
7. ALL GLAZING WITHIN 18" A.F.F. ARE TO RECEIVE SAFETY GLAZING.
8. ALL FIRE RATED DOORS SHALL BE SELF-CLOSING AND SELF-LATCHING.
9. ALL GLAZING IN EXTERIOR DOORS TO BE CLEAR GLASS, LOW-E, ARGON GAS FILLED. OUTBOARD LIGHT TO BE TEMPERED AND INBOARD LITE TO BE LAMINATED. CONTRACTOR IS RESPONSIBLE TO VERIFY UNIT DIMENSIONS WITH MANUFACTURER.
10. CONTRACTOR TO COORDINATE WITH OWNER'S SECURITY VENDOR ON DOORS TO RECEIVE ELECTRONIC EQUIPMENT AND SECURITY ACCESS. CONTRACTOR TO PREP DOORS AND FRAMES AS NECESSARY.

H2M architects + engineers
538 Broad Hollow Road, 4th Floor East
Melville, NY 11747
631.756.8000 • www.h2m.com

CONSULTANTS:

MARK	DATE	DESCRIPTION

REGISTERED ARCHITECT ROBERT BEE 032389 STATE OF NEW YORK

*ALTERATION OF THIS DOCUMENT EXCEPT BY A LICENSED PROFESSIONAL IS ILLEGAL.

DESIGNED BY:	DRAWN BY:	CHECKED BY:	REVIEWED BY:
KEM	JHG		

PROJECT No:	DATE:	SCALE:
VGFD2001	JULY 2022	AS SHOWN

CLIENT

VAILS GATE FIRE DISTRICT

New Storage Building (Phase I)
New Fire Station (Phase II)

872 Blooming Grove Turnpike
New Windsor, NY 12553

CONTRACT

CONTRACT G
GENERAL CONSTRUCTION

STATUS

FINAL BID DOCUMENT

SHEET TITLE

ARCHITECTURE
DOOR DETAILS
NEW FIRE STATION
PHASE 2

DRAWING No.

A2 521.00

C:\Users\jguzman\Documents\VGFD2001_Central21_A_jguzman.rvt

7/18/2022 8:20:52 AM

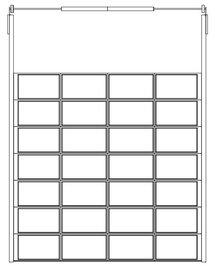

TYPE O-1

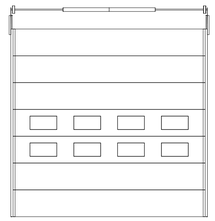

TYPE O-2

Overhead Door Types

SCALE: 3/16" = 1'-0"

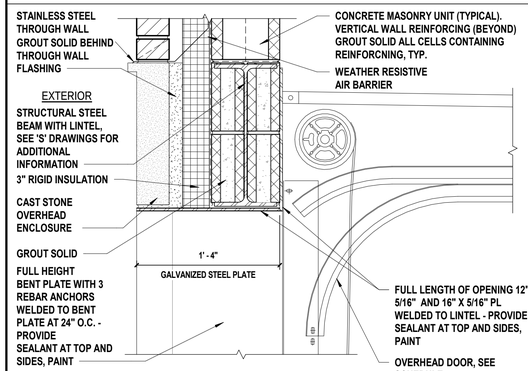

1 O.H. Door - Head Detail

SCALE: 1 1/2" = 1'-0"

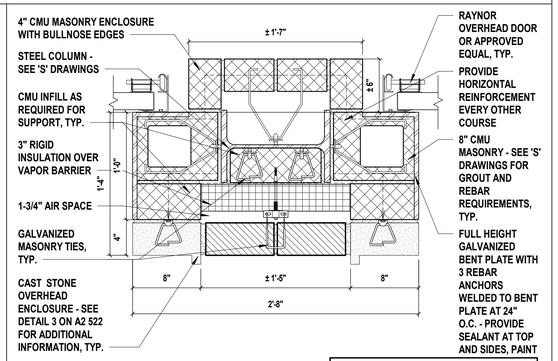

2 O.H. Door - Jamb Detail

SCALE: 1 1/2" = 1'-0"

NOTE:
SEE 'P' DRAWINGS FOR HOSE BIB LOCATIONS WITHIN COLUMN ENCLOSURES

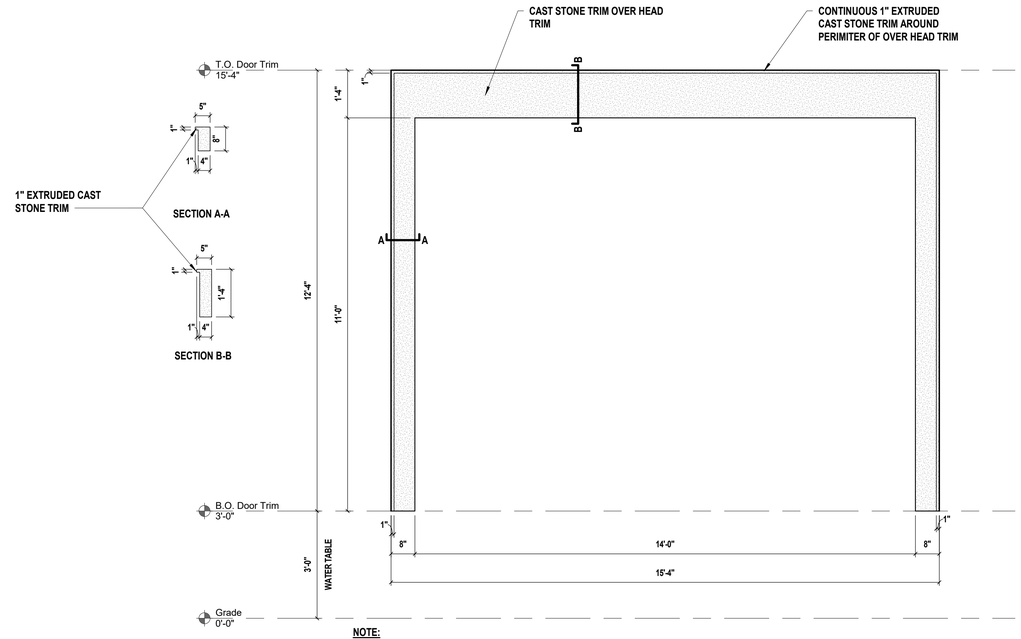

4 Cast Stone O.H. Door Trim

SCALE: 1/2" = 1'-0"

NOTE:

1. FINAL COLOR, AND FINISH TEXTURE TO BE SELECTED BY OWNER AND ARCHITECT DURING SHOP DRAWING REVIEW. DISPLAYED INFORMATION IS FOR REFERENCE ONLY.
2. CONTRACTOR TO INSTALL CAST STONE AS PER MANUFACTURERS REQUIREMENTS AND TO PROVIDE A WEATHERTIGHT SEAL
3. REFER TO CONCRETE NCMA TEK GUIDELINES FOR INSTALLATION METHODS FOR BRICK MASONRY / CAST STONE JOINTS.

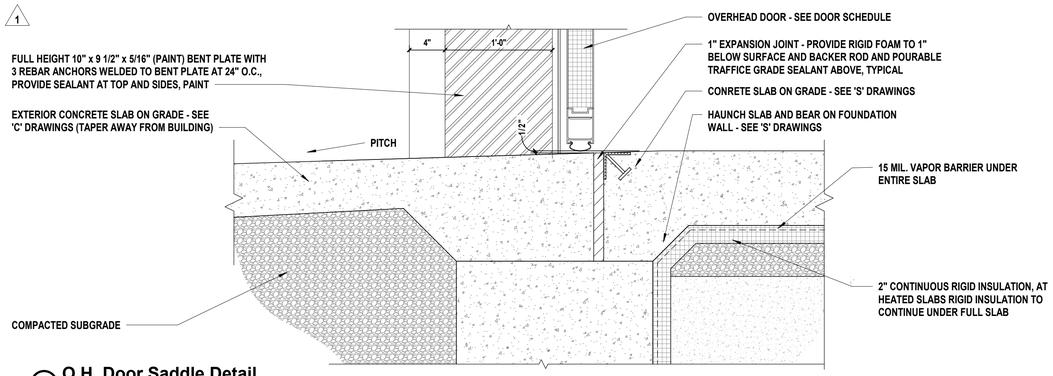

3 O.H. Door Saddle Detail

SCALE: 1 1/2" = 1'-0"

C:\Users\jguzman\Documents\VGFD2001_Central21_A_jguzmanBK622.rvt

8/19/2022 10:03:49 AM

H2M architects + engineers

538 Broad Hollow Road, 4th Floor East
Melville, NY 11747
631.756.8000 • www.h2m.com

CONSULTANTS:

MARK	DATE	DESCRIPTION
1	8/24/2022	ADDENDUM #1

REGISTERED ARCHITECT ROBERT BEE 032389 STATE OF NEW YORK

*ALTERATION OF THIS DOCUMENT EXCEPT BY A LICENSED PROFESSIONAL IS ILLEGAL.

DESIGNED BY:	DRAWN BY:	CHECKED BY:	REVIEWED BY:
KEM	JHG		

PROJECT No:	DATE:	SCALE:
VGFD2001	JULY 2022	AS SHOWN

CLIENT

VAILS GATE FIRE DISTRICT

New Storage Building (Phase I)
New Fire Station (Phase II)

872 Blooming Grove Turnpike
New Windsor, NY 12553

CONTRACT

CONTRACT G
GENERAL CONSTRUCTION

STATUS

FINAL BID DOCUMENT

SHEET TITLE

ARCHITECTURE
DOOR DETAILS
NEW FIRE STATION
PHASE 2

DRAWING No.

A2 522.01

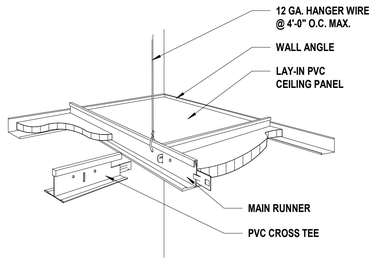

1 ACP Ceiling Detail
SCALE:NTS

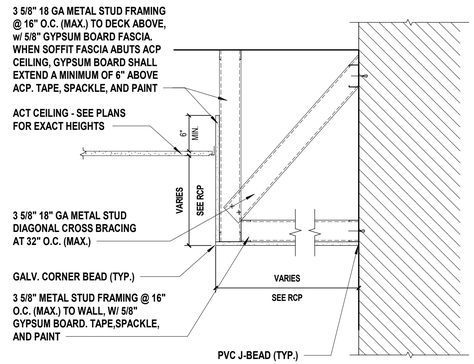

2 Typical Soffit Ceiling Detail
SCALE: 1" = 1'-0"

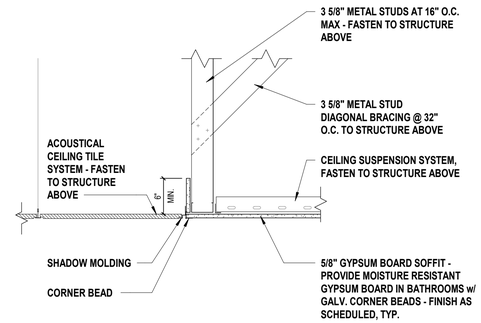

3 Typical Soffit Ceiling Detail
SCALE: 1" = 1'-0"

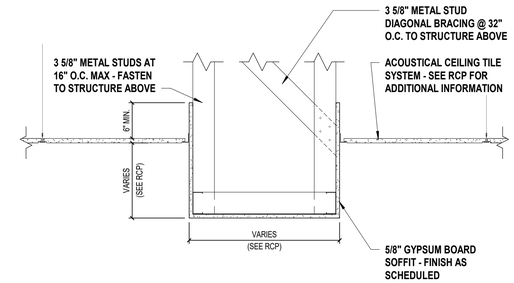

NOTE: AT EXPOSED CEILING LOCATIONS, RUN GYPSUM BOARD UP TO UNDERSIDE OF STRUCTURE

4 Typical Soffit / Header Detail
SCALE: 1" = 1'-0"

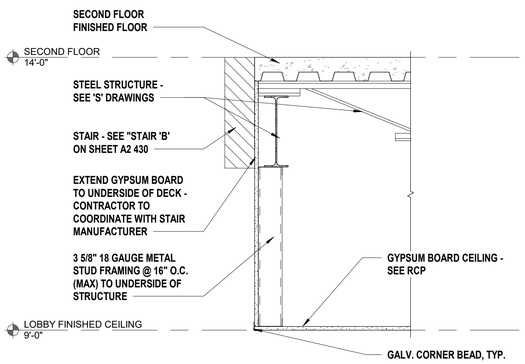

5 Typical Soffit Ceiling Detail at Stair 'B'
SCALE: 1" = 1'-0"

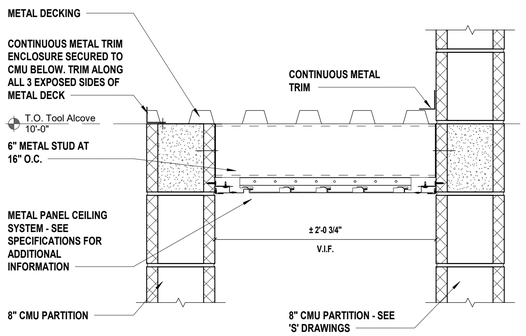

6 Tool Alcove Ceiling Detail
SCALE: 1 1/2" = 1'-0"

H 2 M architects + engineers

538 Broad Hollow Road, 4th Floor East
Melville, NY 11747
631.756.8000 • www.h2m.com

CONSULTANTS:

MARK	DATE	DESCRIPTION

REGISTERED ARCHITECT ROBERT BECK 032389 STATE OF NEW YORK

*ALTERATION OF THIS DOCUMENT EXCEPT BY A LICENSED PROFESSIONAL IS ILLEGAL.

DESIGNED BY:	DRAWN BY:	CHECKED BY:	REVIEWED BY:
KEM	JHG		

PROJECT No:	DATE:	SCALE:
VGFD2001	JULY 2022	AS SHOWN

CLIENT

VAILS GATE FIRE DISTRICT

New Storage Building (Phase I)
New Fire Station (Phase II)

872 Blooming Grove Turnpike
New Windsor, NY 12553

CONTRACT

CONTRACT G
GENERAL CONSTRUCTION

STATUS

FINAL BID DOCUMENT

SHEET TITLE

ARCHITECTURE
CEILING AND SOFFIT DETAILS
NEW FIRE STATION
PHASE 2

DRAWING No.

A2 530.00

C:\Users\jguzman\Documents\VGFD2001_Central21_A_jguzman.rvt

7/18/2022 8:20:56 AM

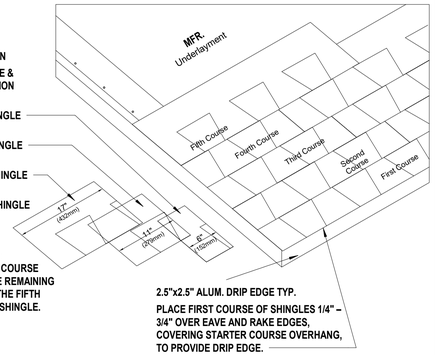

SHINGLE INSTALLATION

START AT EITHER RAKE & LAY IN EITHER DIRECTION

FIRST COURSE: START WITH FULL SHINGLE

SECOND COURSE: TRIM 6" OFF FIRST SHINGLE

THIRD COURSE: TRIM 11" OFF FIRST SHINGLE

FOURTH COURSE: TRIM 17" OFF FIRST SHINGLE

REMAINING COURSES: REPEAT THE 1ST - 4TH COURSE INSTRUCTIONS ON THE REMAINING COURSES, STARTING THE FIFTH COURSE WITH A FULL SHINGLE.

2.5"x2.5" ALUM. DRIP EDGE TYP.

PLACE FIRST COURSE OF SHINGLES 1/4" – 3/4" OVER EAVE AND RAKE EDGES, COVERING STARTER COURSE OVERHANG, TO PROVIDE DRIP EDGE.

NOTES:
1.CONTINUE EACH COURSE WITH WHOLE SHINGLES.
2. STRIKE A CHALK LINE ABOUT EVERY 6 COURSES TO CHECK PARALLEL ALIGNMENT WITH EAVES.

1 Shingle Installation Detail
SCALE:NTS

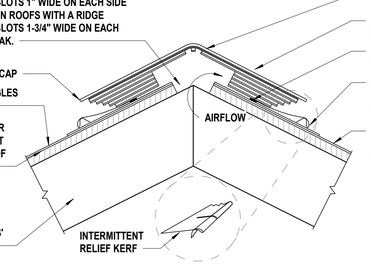

CUT CONTINUOUS VENT SLOTS THROUGH SHEATHING. ON ROOFS WITHOUT RIDGE BOARD, MAKE SLOTS 1" WIDE ON EACH SIDE OF THE PEAK. ON ROOFS WITH A RIDGE BOARD, MAKE SLOTS 1-3/4" WIDE ON EACH SIDE OF THE PEAK.

1/2" MAXIMUM OVERHANG ON CAP

ASPHALT SHINGLES AS SPECIFIED

MANUFACTURER UNDERLAYMENT AT EACH SIDE OF RIDGE

METAL TRUSS SYSTEM - SEE 'S' DRAWINGS

SHINGLE CAP

RIDGE VENT (SNOW COUNTRY)

1/4" BEAD OF SILICONE CALKING

ACTIVE WEATHER FOIL (SNOW COUNTRY)

ICE SHIELD STORM BARRIER AT EACH SIDE OF RIDGE

2 Ridge Vent Detail
SCALE: 3" = 1'-0"

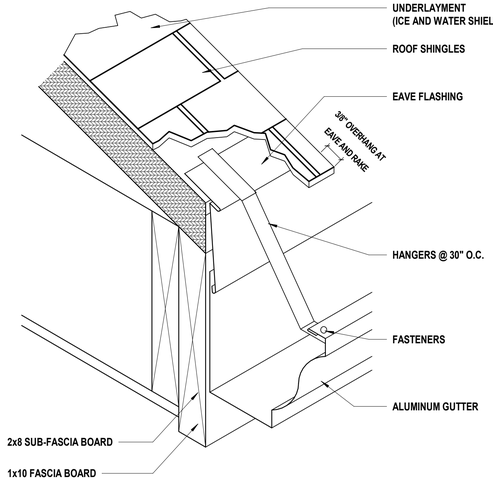

UNDERLAYMENT (ICE AND WATER SHIELD)

ROOF SHINGLES

EAVE FLASHING

HANGERS @ 30" O.C.

FASTENERS

ALUMINUM GUTTER

2x8 SUB-FASCIA BOARD

1x10 FASCIA BOARD

3 Gutter Detail
SCALE: 3" = 1'-0"

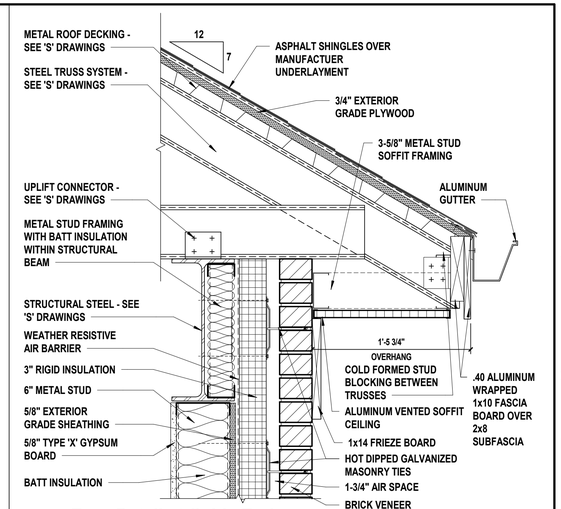

METAL ROOF DECKING - SEE 'S' DRAWINGS

STEEL TRUSS SYSTEM - SEE 'S' DRAWINGS

UPLIFT CONNECTOR - SEE 'S' DRAWINGS

METAL STUD FRAMING WITH BATT INSULATION WITHIN STRUCTURAL BEAM

STRUCTURAL STEEL - SEE 'S' DRAWINGS

WEATHER RESISTIVE AIR BARRIER

3" RIGID INSULATION

6" METAL STUD

5/8" EXTERIOR GRADE SHEATHING

5/8" TYPE 'X' GYPSUM BOARD

BATT INSULATION

ASPHALT SHINGLES OVER MANUFACTUER UNDERLAYMENT

3/4" EXTERIOR GRADE PLYWOOD

3-5/8" METAL STUD SOFFIT FRAMING

ALUMINUM GUTTER

COLD FORMED STUD BLOCKING BETWEEN TRUSSES

ALUMINUM VENTED SOFFIT CEILING

1x14 FRIEZE BOARD

HOT DIPPED GALVANIZED MASONRY TIES

1-3/4" AIR SPACE

BRICK VENEER

.40 ALUMINUM WRAPPED 1x10 FASCIA BOARD OVER 2x8 SUBFASCIA

4 Eave Detail at Gable Ends
SCALE: 1 1/2" = 1'-0"

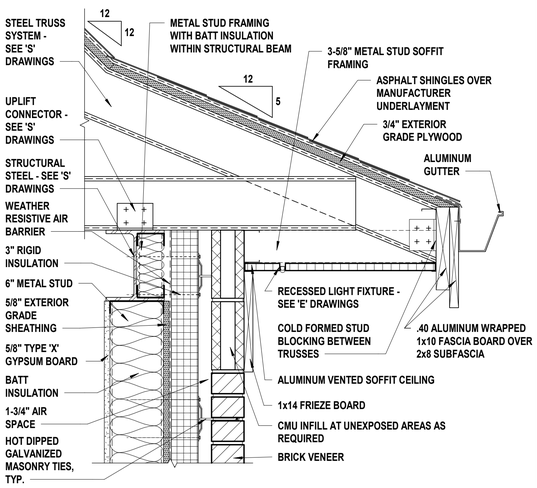

STEEL TRUSS SYSTEM - SEE 'S' DRAWINGS

UPLIFT CONNECTOR - SEE 'S' DRAWINGS

STRUCTURAL STEEL - SEE 'S' DRAWINGS

WEATHER RESISTIVE AIR BARRIER

3" RIGID INSULATION

6" METAL STUD

5/8" EXTERIOR GRADE SHEATHING

5/8" TYPE 'X' GYPSUM BOARD

BATT INSULATION

1-3/4" AIR SPACE

HOT DIPPED GALVANIZED MASONRY TIES, TYP.

METAL STUD FRAMING WITH BATT INSULATION WITHIN STRUCTURAL BEAM

3-5/8" METAL STUD SOFFIT FRAMING

ASPHALT SHINGLES OVER MANUFACTURER UNDERLAYMENT

3/4" EXTERIOR GRADE PLYWOOD

ALUMINUM GUTTER

RECESSED LIGHT FIXTURE - SEE 'E' DRAWINGS

COLD FORMED STUD BLOCKING BETWEEN TRUSSES

.40 ALUMINUM WRAPPED 1x10 FASCIA BOARD OVER 2x8 SUBFASCIA

ALUMINUM VENTED SOFFIT CEILING

1x14 FRIEZE BOARD

CMU INFILL AT UNEXPOSED AREAS AS REQUIRED

BRICK VENEER

5 Eave Detail at Tower
SCALE: 1 1/2" = 1'-0"

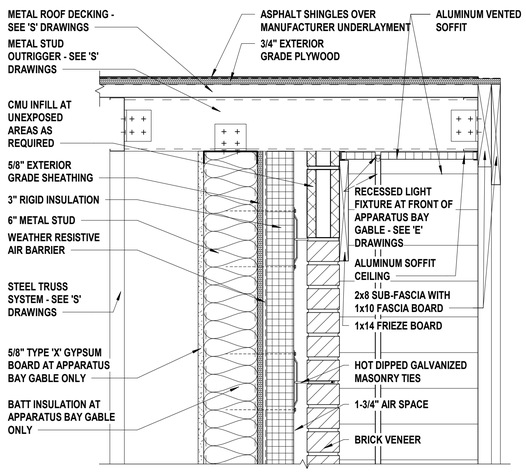

METAL ROOF DECKING - SEE 'S' DRAWINGS

METAL STUD OUTRIGGER - SEE 'S' DRAWINGS

CMU INFILL AT UNEXPOSED AREAS AS REQUIRED

5/8" EXTERIOR GRADE SHEATHING

3" RIGID INSULATION

6" METAL STUD

WEATHER RESISTIVE AIR BARRIER

STEEL TRUSS SYSTEM - SEE 'S' DRAWINGS

5/8" TYPE 'X' GYPSUM BOARD AT APPARATUS BAY GABLE ONLY

BATT INSULATION AT APPARATUS BAY GABLE ONLY

ASPHALT SHINGLES OVER MANUFACTURER UNDERLAYMENT

3/4" EXTERIOR GRADE PLYWOOD

ALUMINUM VENTED SOFFIT

RECESSED LIGHT FIXTURE AT FRONT OF APPARATUS BAY GABLE - SEE 'E' DRAWINGS

ALUMINUM SOFFIT CEILING

2x8 SUB-FASCIA WITH 1x10 FASCIA BOARD

1x14 FRIEZE BOARD

HOT DIPPED GALVANIZED MASONRY TIES

1-3/4" AIR SPACE

BRICK VENEER

6 Typical Rake Detail
SCALE: 1 1/2" = 1'-0"

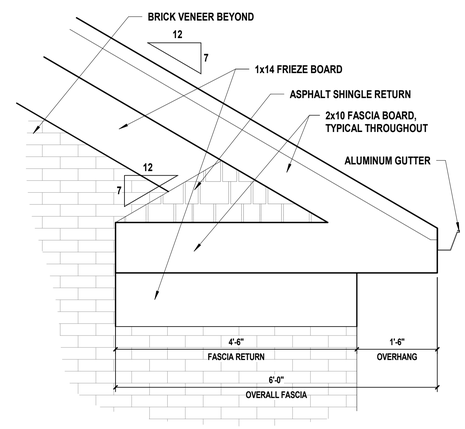

BRICK VENEER BEYOND

1x14 FRIEZE BOARD

ASPHALT SHINGLE RETURN

2x10 FASCIA BOARD, TYPICAL THROUGHOUT

ALUMINUM GUTTER

7 Fascia Board Return Detail
SCALE: 3/4" = 1'-0"

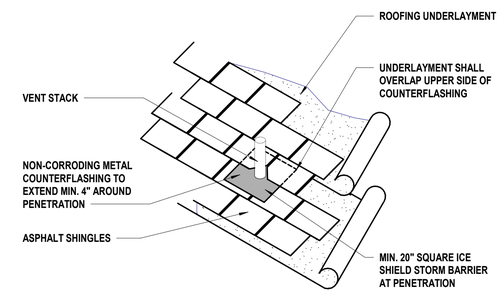

ROOFING UNDERLAYMENT

UNDERLAYMENT SHALL OVERLAP UPPER SIDE OF COUNTERFLASHING

VENT STACK

NON-CORRODING METAL COUNTERFLASHING TO EXTEND MIN. 4" AROUND PENETRATION

ASPHALT SHINGLES

MIN. 20" SQUARE ICE SHIELD STORM BARRIER AT PENETRATION

8 Plumbing Vent Flashing Detail
SCALE: 6" = 1'-0"

NOTE:
ALL EXTERIOR ROOF SHEATHING TO BE FIRE RETARDANT AS PER SPECIFICATION SECTION 061600 2.05A

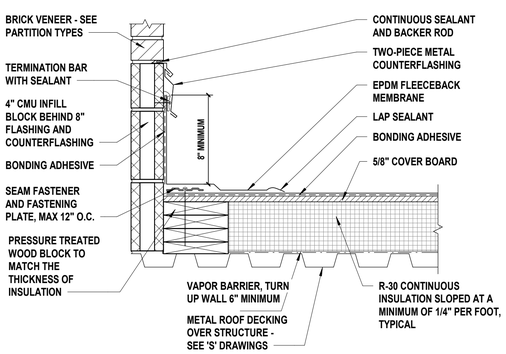

BRICK VENEER - SEE PARTITION TYPES

TERMINATION BAR WITH SEALANT

4" CMU INFILL BLOCK BEHIND 8" FLASHING AND COUNTERFLASHING

BONDING ADHESIVE

SEAM FASTENER AND FASTENING PLATE, MAX 12" O.C.

PRESSURE TREATED WOOD BLOCK TO MATCH THE THICKNESS OF INSULATION

CONTINUOUS SEALANT AND BACKER ROD

TWO-PIECE METAL COUNTERFLASHING

EPDM FLEECEBACK MEMBRANE

LAP SEALANT

BONDING ADHESIVE

5/8" COVER BOARD

VAPOR BARRIER, TURN UP WALL 6" MINIMUM

METAL ROOF DECKING OVER STRUCTURE - SEE 'S' DRAWINGS

R-30 CONTINUOUS INSULATION SLOPED AT A MINIMUM OF 1/4" PER FOOT, TYPICAL

9 EPDM Flashing Detail
SCALE: 1 1/2" = 1'-0"

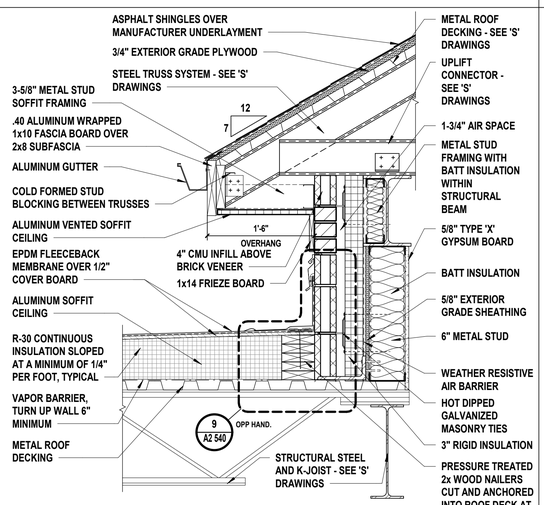

ASPHALT SHINGLES OVER MANUFACTURER UNDERLAYMENT

3/4" EXTERIOR GRADE PLYWOOD

STEEL TRUSS SYSTEM - SEE 'S' DRAWINGS

3-5/8" METAL STUD SOFFIT FRAMING

.40 ALUMINUM WRAPPED 1x10 FASCIA BOARD OVER 2x8 SUBFASCIA

ALUMINUM GUTTER

COLD FORMED STUD BLOCKING BETWEEN TRUSSES

ALUMINUM VENTED SOFFIT CEILING

EPDM FLEECEBACK MEMBRANE OVER 1/2" COVER BOARD

ALUMINUM SOFFIT CEILING

R-30 CONTINUOUS INSULATION SLOPED AT A MINIMUM OF 1/4" PER FOOT, TYPICAL

VAPOR BARRIER, TURN UP WALL 6" MINIMUM

METAL ROOF DECKING

4" CMU INFILL ABOVE BRICK VENEER

1x14 FRIEZE BOARD

STRUCTURAL STEEL AND K-JOIST - SEE 'S' DRAWINGS

METAL ROOF DECKING - SEE 'S' DRAWINGS

UPLIFT CONNECTOR - SEE 'S' DRAWINGS

1-3/4" AIR SPACE

METAL STUD FRAMING WITH BATT INSULATION WITHIN STRUCTURAL BEAM

5/8" TYPE 'X' GYPSUM BOARD

BATT INSULATION

5/8" EXTERIOR GRADE SHEATHING

6" METAL STUD

WEATHER RESISTIVE AIR BARRIER

HOT DIPPED GALVANIZED MASONRY TIES

3" RIGID INSULATION

PRESSURE TREATED 2x WOOD NAILERS CUT AND ANCHORED INTO ROOF DECK AT 4" O.C.

10 Shingle to Flat Roof Transition
SCALE: 1" = 1'-0"

C:\Users\jguzman\Documents\VGFD2001_Central21_A_jguzmanBK622.rvt

2/1/2023 11:48:57 AM

H 2 M architects + engineers

538 Broad Hollow Road, 4th Floor East
Melville, NY 11747
631.756.8000 • www.h2m.com

CONSULTANTS:

MARK	DATE	DESCRIPTION
3	02/02/2023	REVS. PER TOWN COMMENTS

REGISTERED ARCHITECT ROBERT BEE 032389 STATE OF NEW YORK

*ALTERATION OF THIS DOCUMENT EXCEPT BY A LICENSED PROFESSIONAL IS ILLEGAL.

DESIGNED BY:	DRAWN BY:	CHECKED BY:	REVIEWED BY:
KEM	JHG		

PROJECT No:	DATE:	SCALE:
VGFD2001	JULY 2022	AS SHOWN

CLIENT

VAILS GATE FIRE DISTRICT

New Storage Building (Phase I)
New Fire Station (Phase II)

872 Blooming Grove Turnpike
New Windsor, NY 12553

CONTRACT

CONTRACT G
GENERAL CONSTRUCTION

STATUS

FINAL BID DOCUMENT

SHEET TITLE

ARCHITECTURE
NEW FIRE STATION
ROOF DETAILS
PHASE 2

DRAWING No.

A2 540.03

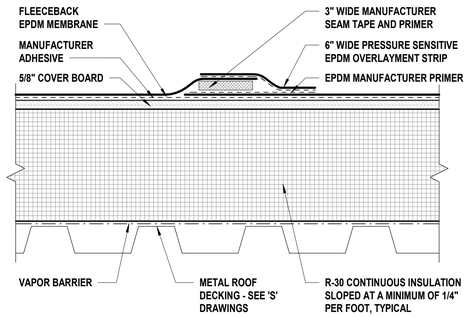

1 Typical EPDM Splice Detail
SCALE: 3" = 1'-0"

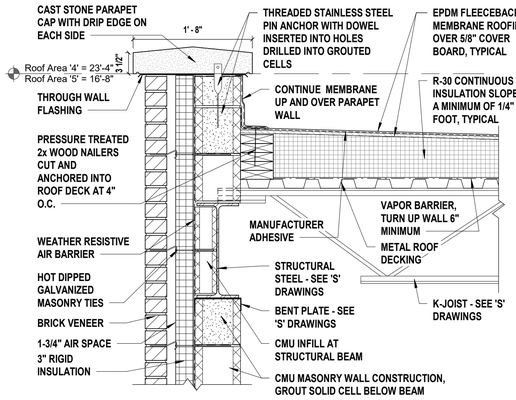

2 Typical Parapet Detail at Masonry Wall
SCALE: 1" = 1'-0"

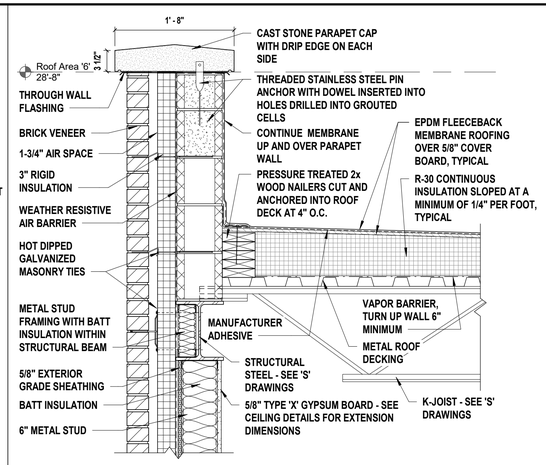

3 Typical Parapet Detail at Metal Stud Wall
SCALE: 1" = 1'-0"

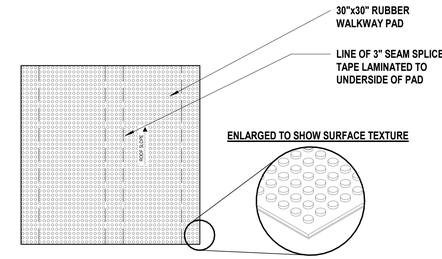

NOTES:

1. SEE PLANS FOR LOCATIONS AND QUANTITIES OF WALKWAY PADS
2. FINAL LOCATIONS AND QUANTITIES TO BE DETERMINED IN FIELD WITH ARCHITECT OF RECORD

4 Typical Walkway Pad Detail
SCALE: 12" = 1'-0"

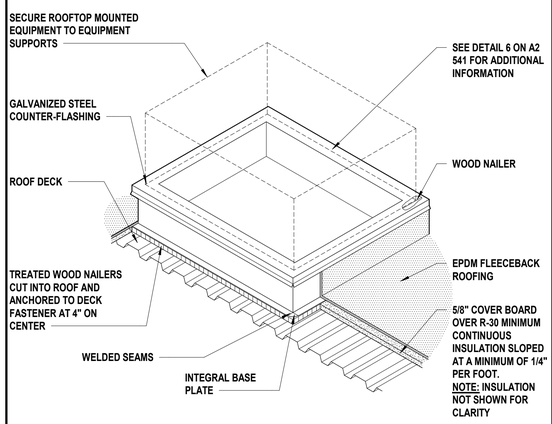

5 Equipment Support Detail 1 of 2
SCALE: 1 1/2" = 1'-0"

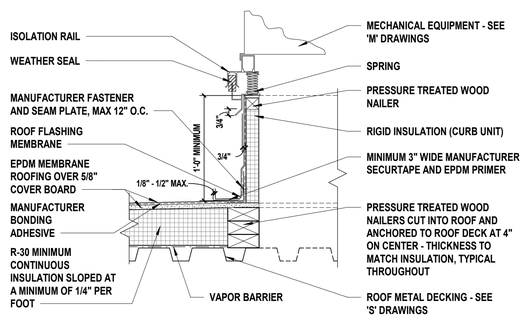

6 Equipment Support Detail 2 of 2
SCALE: 1 1/2" = 1'-0"

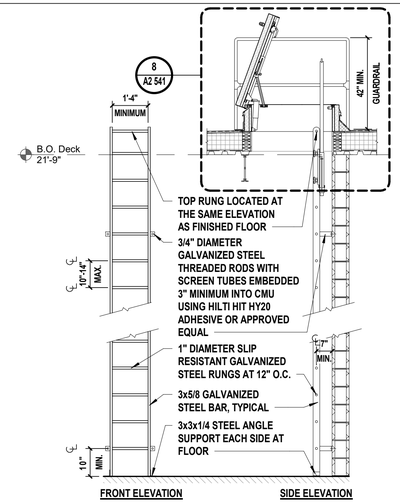

7 Roof Hatch Ladder Detail
SCALE: 3/8" = 1'-0"

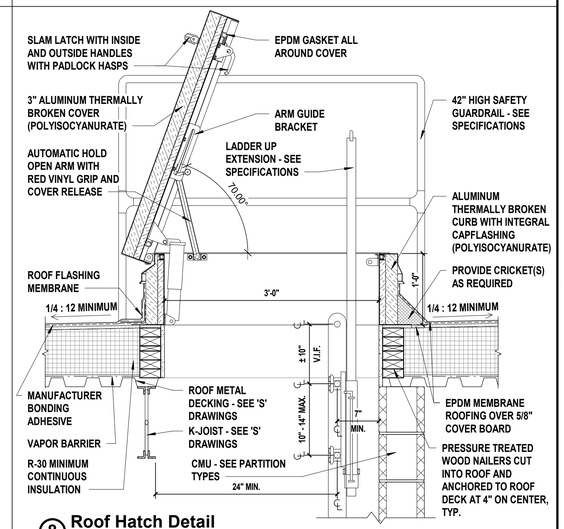

8 Roof Hatch Detail
SCALE: 1" = 1'-0"

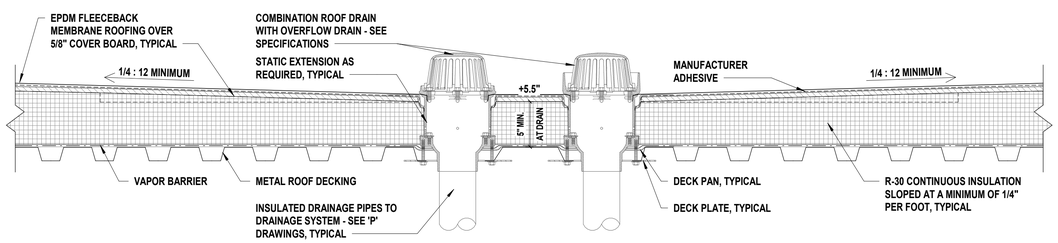

9 Roof Drain Detail
SCALE: 1 1/2" = 1'-0"

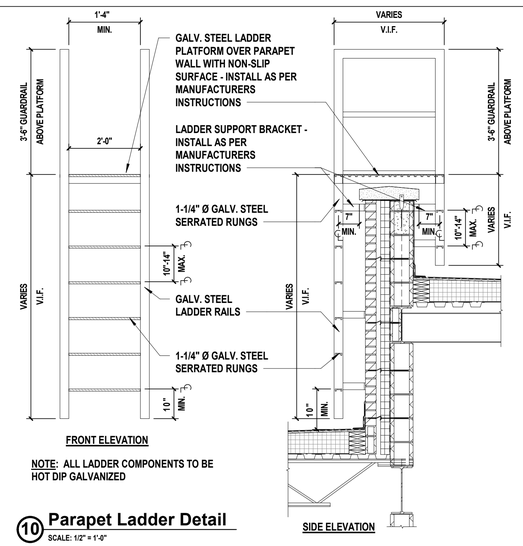

10 Parapet Ladder Detail
SCALE: 1/2" = 1'-0"

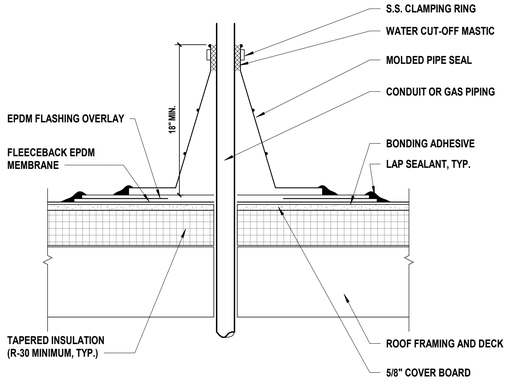

11 Typical Pipe Penetration Detail
SCALE: 1 1/2" = 1'-0"

H2M architects + engineers
538 Broad Hollow Road, 4th Floor East
Melville, NY 11747
631.756.8000 • www.h2m.com

CONSULTANTS:

MARK	DATE	DESCRIPTION

REGISTERED ARCHITECT ROBERT BEE 032389 STATE OF NEW YORK

*ALTERATION OF THIS DOCUMENT EXCEPT BY A LICENSED PROFESSIONAL IS ILLEGAL.

DESIGNED BY:	DRAWN BY:	CHECKED BY:	REVIEWED BY:
KEM	JHG		

PROJECT No:	DATE:	SCALE:
VGFD2001	JULY 2022	AS SHOWN

CLIENT

VAILS GATE FIRE DISTRICT

New Storage Building (Phase I)
New Fire Station (Phase II)

872 Blooming Grove Turnpike
New Windsor, NY 12553

CONTRACT

CONTRACT G
GENERAL CONSTRUCTION

STATUS

FINAL BID DOCUMENT

SHEET TITLE

ARCHITECTURE
ROOF DETAILS
NEW FIRE STATION
PHASE 2

DRAWING No.

A2 541.00

C:\Users\jguzman\Documents\VGFD2001_Central21_A_jguzman.rvt

7/18/2022 8:21:02 AM

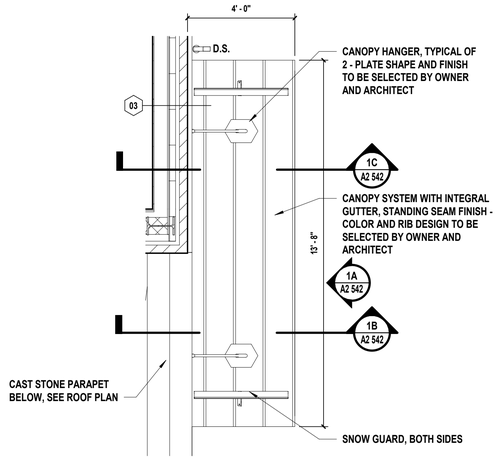

1 Enlarged Side Entrance Canopy Roof Plan
SCALE: 3/8" = 1'-0"

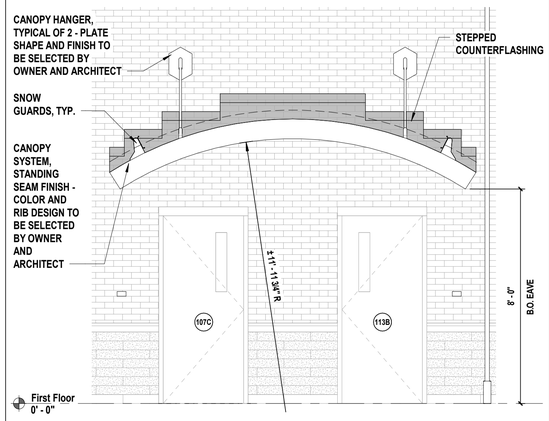

1A Side Entry Elevation
SCALE: 3/8" = 1'-0"

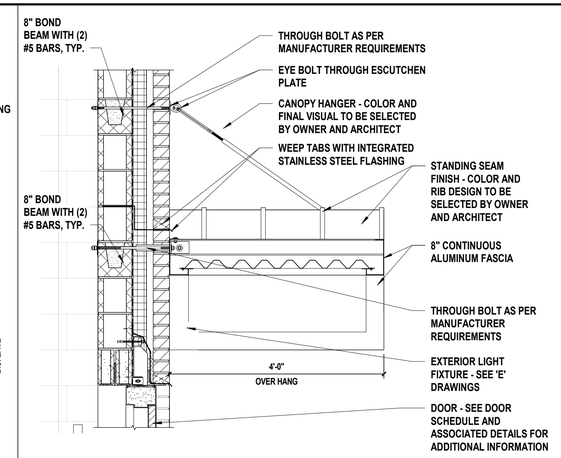

1B Side Entry Section at CMU Masonry
SCALE: 3/4" = 1'-0"

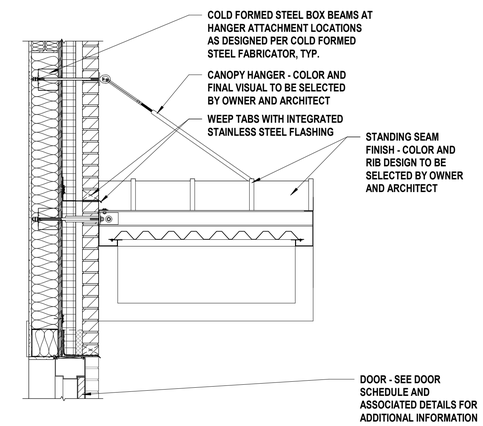

1C Side Entry Section at Metal Stud Framing
SCALE: 3/4" = 1'-0"

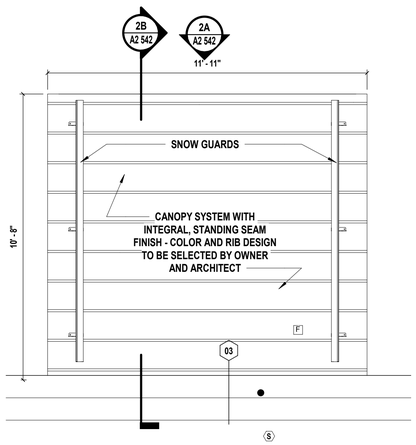

2 Enlarged Rear Entrance Canopy Roof Plan
SCALE: 3/8" = 1'-0"

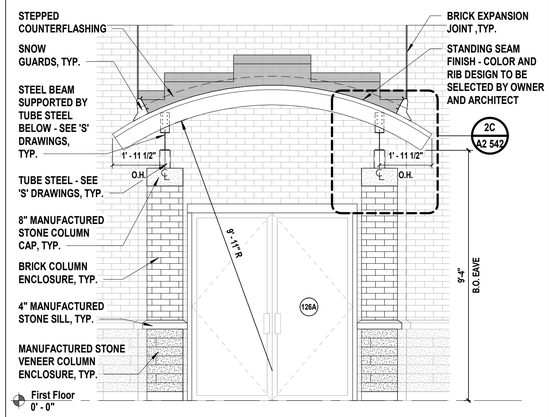

2A Rear Entry Elevation
SCALE: 3/8" = 1'-0"

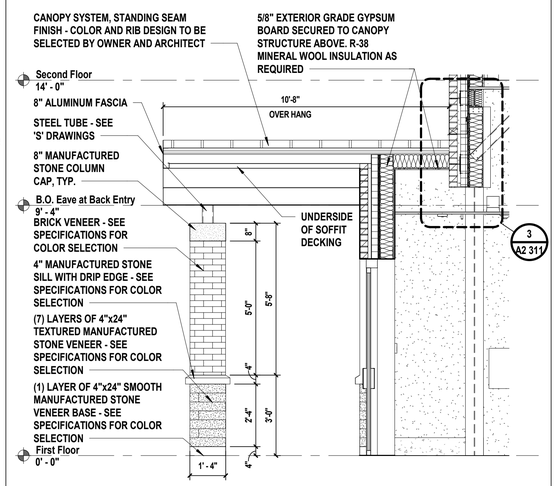

2B Rear Entry Section
SCALE: 3/8" = 1'-0"

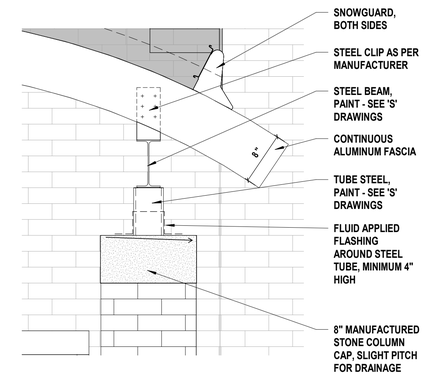

2C Column to Steel Connection Detail
SCALE: 1" = 1'-0"

NOTE:

CONTRACTOR TO SUBMIT SITE SPECIFIC SHOP DRAWINGS OF ENTRANCE CANOPIES WITH DIMENSIONS AND DETAILS FOR ARCHITECT APPROVAL

H2M architects + engineers
538 Broad Hollow Road, 4th Floor East
Melville, NY 11747
631.756.8000 • www.h2m.com

CONSULTANTS:

MARK	DATE	DESCRIPTION

REGISTERED ARCHITECT ROBERT BEE 032389 STATE OF NEW YORK

*ALTERATION OF THIS DOCUMENT EXCEPT BY A LICENSED PROFESSIONAL IS ILLEGAL.

DESIGNED BY:	DRAWN BY:	CHECKED BY:	REVIEWED BY:
KEM	JHG		
PROJECT No: VGFD2001	DATE: JULY 2022		SCALE: AS SHOWN

CLIENT

VAILS GATE FIRE DISTRICT

New Storage Building (Phase I)
New Fire Station (Phase II)

872 Blooming Grove Turnpike
New Windsor, NY 12553

CONTRACT

CONTRACT G
GENERAL CONSTRUCTION

STATUS

FINAL BID DOCUMENT

SHEET TITLE

ARCHITECTURE
CANOPY DETAILS
NEW FIRE STATION
PHASE 2

DRAWING No.

A2 542.00

C:\Users\jguzman\Documents\VGFD2001_Central21_A_jguzman.rvt

7/18/2022 8:21:08 AM

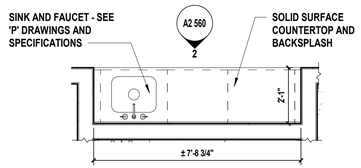

1 Training Room Millwork Plan
SCALE: 3/8" = 1'-0"

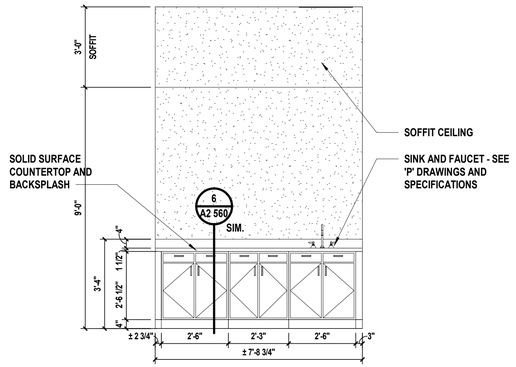

2 Training Room Millwork Elevation
SCALE: 3/8" = 1'-0"

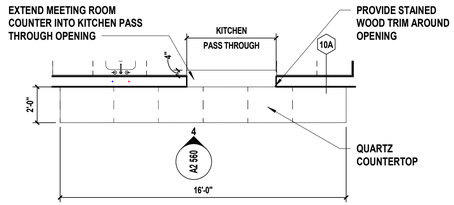

3 Meeting Room Millwork Plan
SCALE: 1/4" = 1'-0"

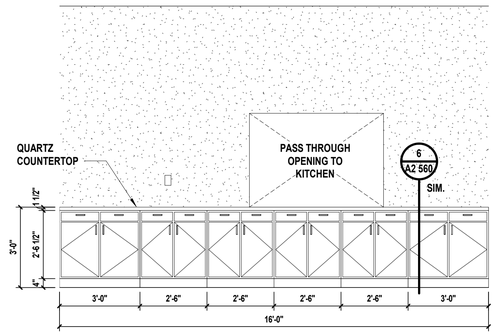

4 Meeting Room Millwork Elevation
SCALE: 3/8" = 1'-0"

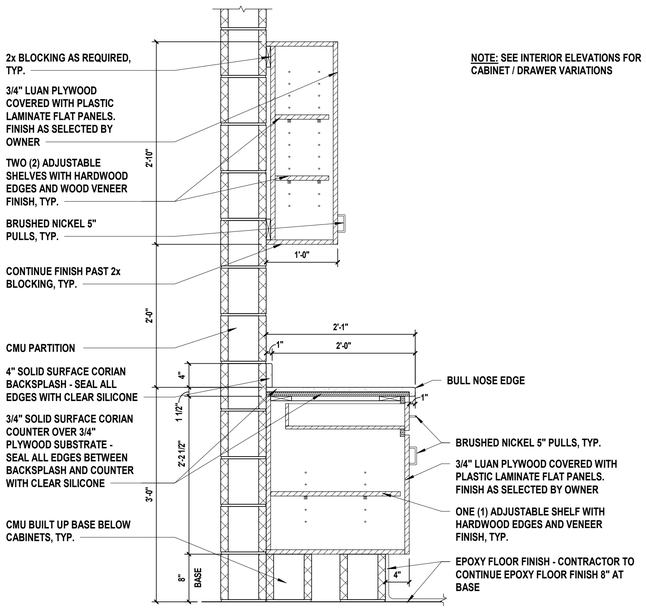

NOTE: SEE INTERIOR ELEVATIONS FOR CABINET / DRAWER VARIATIONS

5 Millwork Section at Laundry Room
SCALE: 1" = 1'-0"

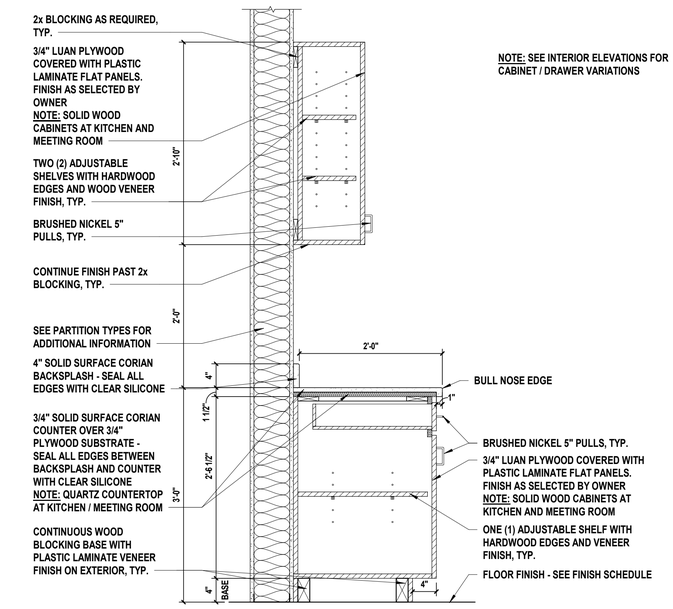

NOTE: SEE INTERIOR ELEVATIONS FOR CABINET / DRAWER VARIATIONS

6 Typical Millwork Section
SCALE: 1" = 1'-0"

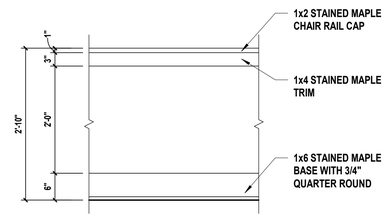

7 Chair Rail Detail
SCALE: 3/4" = 1'-0"

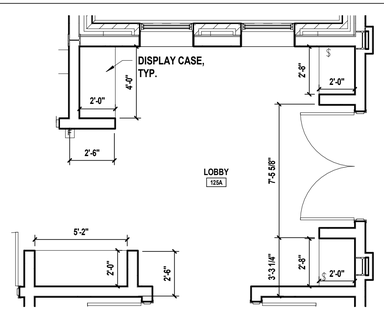

8 First Floor Display Cases
SCALE: 1/4" = 1'-0"

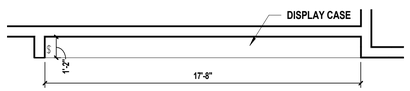

9 Second Floor Display Case
SCALE: 1/4" = 1'-0"

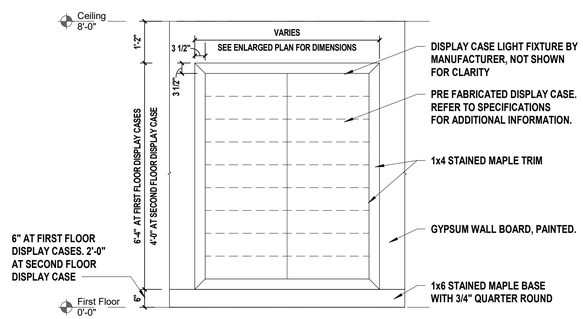

10 Typical Display Case Elevation
SCALE: 1/2" = 1'-0"

H 2 M architects + engineers

538 Broad Hollow Road, 4th Floor East
Melville, NY 11747
631.756.8000 • www.h2m.com

CONSULTANTS:

MARK	DATE	DESCRIPTION

REGISTERED ARCHITECT ROBERT BEE 032389 STATE OF NEW YORK

*ALTERATION OF THIS DOCUMENT EXCEPT BY A LICENSED PROFESSIONAL IS ILLEGAL.

DESIGNED BY:	DRAWN BY:	CHECKED BY:	REVIEWED BY:
KEM	JHG		
PROJECT No: VGFD2001	DATE: JULY 2022		SCALE: AS SHOWN

CLIENT

VAILS GATE FIRE DISTRICT

New Storage Building (Phase I)
New Fire Station (Phase II)

872 Blooming Grove Turnpike
New Windsor, NY 12553

CONTRACT

CONTRACT G
GENERAL CONSTRUCTION

STATUS

FINAL BID DOCUMENT

SHEET TITLE

ARCHITECTURE
MILLWORK PLANS, ELEVATIONS AND NOTES
NEW FIRE STATION
PHASE 2

DRAWING No.

A2 560.00

C:\Users\jguzman\Documents\VGFD2001_Central21_A_jguzman.rvt

7/18/2022 8:21:11 AM

GENERAL FINISH NOTES

1. REFER TO SPECIFICATIONS FOR CEILING TYPE DESCRIPTIONS.
2. ALL STAIRCASES TO RECEIVE SLIP RESISTANT RUBBER TREADS.
3. THIS SCHEDULE SERVES AS A GENERAL LIST OF FINISH ITEMS AND IS NOT A LIST OF ALL FINISH ITEMS WITHIN A ROOM OR SPACE. REFER TO ALL CONTRACT DOCUMENT DRAWINGS AND SPECIFICATIONS TO DETERMINE ALL REQUIRED FINISHES AND FINISH ITEMS.
4. MOISTURE RESISTANT GYPSUM WALL BOARD AND ACOUSTICAL CEILING PANELS TO BE INSTALLED IN RESTROOMS, VESTIBULES AND JANITOR'S CLOSET WHERE WALLS ARE TO BE PAINTED.
5. CEMENT BOARD TO BE INSTALLED BEHIND ALL TILE FINISHED WALLS; PROVIDE SOLID TREATED WOOD BLOCKING AT ALL MOUNTED ITEMS AND ACCESSORIES, TYP.
6. WATER PROOF MEMBRANE TO BE INSTALLED BEHIND ALL TILE FINISHED WALLS IN SHOWER LOCATIONS.
7. ALL PAINTING SHALL BE PERFORMED IN ACCORDANCE WITH THE REQUIREMENTS CONTAINED IN DIVISION 9 OF THE SPECIFICATIONS.
8. CONTRACTOR SHALL PERFORM RELATIVE HUMIDITY TEST FOR CONCRETE SLABS AS PER ASTMF210 BEFORE THE INSTALLATION OF ALL FLOOR FINISHES. INFORMATION SHALL BE PROVIDED TO THE ARCHITECT AND TO THE FLOORING INSTALLERS FOR REVIEW.
9. SET FLOOR TILES IN MORTAR BED TO PROVIDE A POSITIVE PITCH TOWARDS FLOOR DRAINS.

FINISH SCHEDULE

ROOM		FLOOR			WALLS								CEILING			
					NORTH		EAST		SOUTH		WEST					
NUMBER	NAME	MATERIAL	FINISH	BASE	MATERIAL	FINISH	MATERIAL	FINISH	MATERIAL	FINISH	MATERIAL	FINISH	MATERIAL	FINISH	HEIGHT	COMMENTS
101	APPARATUS ROOM	CONCRETE	EPOXY	EPOXY	CMU	EPOXY PAINT	CMU	EPOXY PAINT	CMU	EPOXY PAINT	CMU	EPOXY PAINT	EXPOSED / METAL PANELS	PAINT / MANUFACTURER FINISH	VARIES	SEE RCP FOR LOCATION OF METAL PANEL CEILING AND EXPOSED DECKS
102	RADIO ROOM	CONCRETE	EPOXY	EPOXY	GYPSUM	PAINT	GYPSUM	PAINT	GYPSUM	PAINT	GYPSUM	PAINT	ACP-1 / GYPSUM	MANUFACTURER / PAINT	VARIES	SEE RCP
103	STORAGE 1	CONCRETE	EPOXY	EPOXY	CMU	EPOXY PAINT	CMU	EPOXY PAINT	CMU	EPOXY PAINT	CMU	EPOXY PAINT	EXPOSED	PAINT	-	-
104	STORAGE 2	CONCRETE	EPOXY	EPOXY	CMU	EPOXY PAINT	CMU	EPOXY PAINT	CMU	EPOXY PAINT	CMU	EPOXY PAINT	EXPOSED	PAINT	-	-
105	DECON ROOM	CONCRETE	EPOXY	EPOXY	CMU	EPOXY PAINT	CMU	EPOXY PAINT	CMU	EPOXY PAINT	CMU	EPOXY PAINT	ACP-3	MANUFACTURER	8'-0"	
106	LAUNDRY	CONCRETE	EPOXY	EPOXY	CMU	EPOXY PAINT	CMU	EPOXY PAINT	CMU	EPOXY PAINT	CMU	EPOXY PAINT	ACP-3	MANUFACTURER	8'-0"	-
107	GEAR ROOM	CONCRETE	EPOXY	EPOXY	CMU	EPOXY PAINT	CMU	EPOXY PAINT	CMU	EPOXY PAINT	CMU	EPOXY PAINT	METAL PANELS	MANUFACTURER	8'-3"	-
108	TOILET ROOM	CONCRETE	EPOXY	EPOXY	CMU	EPOXY PAINT	CMU	EPOXY PAINT	CMU	EPOXY PAINT	CMU	EPOXY PAINT	EXPOSED	PAINT	-	-
109	SCBA	CONCRETE	EPOXY	EPOXY	CMU	EPOXY PAINT	CMU	EPOXY PAINT	CMU	EPOXY PAINT	CMU	EPOXY PAINT	EXPOSED	PAINT	-	-
110	TOOL ALCOVE	CONCRETE	EPOXY	EPOXY	CMU	EPOXY PAINT	CMU	EPOXY PAINT	CMU	EPOXY PAINT	CMU	EPOXY PAINT	METAL PANELS	MANUFACTURER	9'-4"	
111	SPARE TURNOUT GEAR	CONCRETE	LVT	RUBBER	CMU	EPOXY PAINT	CMU	EPOXY PAINT	CMU	EPOXY PAINT	CMU	EPOXY PAINT	EXPOSED	PAINT	-	-
112	VENDOR DROP OFF	CONCRETE	LVT	RUBBER	GYPSUM	PAINT / FRP	GYPSUM	PAINT / FRP	GYPSUM	PAINT / FRP	GYPSUM	PAINT / FRP	ACP-1	MANUFACTURER	9'-0"	CONTRACTOR TO PROVIDE AND INSTALL WALK-OFF MAT - SEE SPECIFICATIONS. FRP PANELS TO BE 4'-0" A.F.F. AT EACH WALL.
113	CORRIDOR	CONCRETE	LVT	RUBBER	GYPSUM	PAINT	GYPSUM	PAINT	GYPSUM	PAINT	GYPSUM	PAINT	ACP-1	MANUFACTURER	9'-0"	-
114	QUARTERMASTER	CONCRETE	LVT	RUBBER	GYPSUM	PAINT	GYPSUM	PAINT	GYPSUM	PAINT	GYPSUM	PAINT	ACP-1	MANUFACTURER	9'-0"	-
115	JANITORS CLOSET	CONCRETE	SEALER	RUBBER	GYPSUM	PAINT	GYPSUM	PAINT	GYPSUM	PAINT	GYPSUM	PAINT	ACP-3	MANUFACTURER	9'-0"	-
116	MEETING ROOM	CONCRETE	LVT	RUBBER	GYPSUM	PAINT	GYPSUM	PAINT	GYPSUM	PAINT	GYPSUM	PAINT	ACP-1	MANUFACTURER	10'-6"	CONTRACTOR TO PROVIDE CONTINUOUS CHAIR RAILS AT ALL WALLS - SEE DETAIL 2/A2 560. SEE ADD ALTERNATES FOR ADDITIONAL INFORMATION.
117	STORAGE	CONCRETE	LVT	RUBBER	GYPSUM	PAINT	GYPSUM	PAINT	GYPSUM	PAINT	GYPSUM	PAINT	ACP-1	MANUFACTURER	9'-0"	-
118	KITCHEN	CONCRETE	PORCELAIN TILE	PORCELAIN COVE	GYPSUM	FRP	GYPSUM	FRP	GYPSUM	FRP	GYPSUM	FRP	ACP-3	MANUFACTURER	9'-0"	SEE ADD ALTERNATES FOR ADDITIONAL INFORMATION.
119	PANTRY	CONCRETE	PORCELAIN TILE	PORCELAIN COVE	GYPSUM	PAINT	GYPSUM	PAINT	GYPSUM	PAINT	GYPSUM	PAINT	ACP-3	MANUFACTURER	9'-0"	-
120	READY ROOM	CONCRETE	LVT	RUBBER	GYPSUM	PAINT	GYPSUM	PAINT	GYPSUM	PAINT	GYPSUM	PAINT	ACP-1	MANUFACTURER	9'-0"	-
121	MECHANICAL ROOM	CONCRETE	SEALER	RUBBER	GYPSUM	PAINT	GYPSUM	PAINT	GYPSUM	PAINT	GYPSUM	PAINT	EXPOSED	PAINT	-	-
122	ELECTRICAL ROOM	CONCRETE	SEALER	RUBBER	GYPSUM	PAINT	GYPSUM	PAINT	GYPSUM	PAINT	GYPSUM	PAINT	EXPOSED	PAINT	-	-
123	ELEVATOR LOBBY	CONCRETE	LVT	RUBBER	GYPSUM	PAINT	GYPSUM	PAINT	GYPSUM	PAINT	GYPSUM	PAINT	ACP-1	MANUFACTURER	9'-0"	-
124	ELEVATOR	CONCRETE	-	-	CMU	-	CMU	-	CMU	-	CMU	-	-	-	-	-
125A	LOBBY	CONCRETE	PORCELAIN TILE	PORCELAIN COVE	GYPSUM	PAINT	GYPSUM	PAINT	GYPSUM	PAINT	GYPSUM	PAINT	GYPSUM	PAINT	9'-0"	-
125B	CLOSET	CONCRETE	PORCELAIN TILE	PORCELAIN COVE	GYPSUM	PAINT	GYPSUM	PAINT	GYPSUM	PAINT	GYPSUM	PAINT	GYPSUM	PAINT	VARIES	CONTRACTOR TO ALIGN GYPSUM BOARD UNDERNEATH STAIRWELL STRUCTURE
126	VESTIBULE	CONCRETE	PORCELAIN TILE	PORCELAIN COVE	GYPSUM	PAINT	GYPSUM	PAINT	GYPSUM	PAINT	GYPSUM	PAINT	GYPSUM	PAINT	9'-0"	CONTRACTOR TO PROVIDE AND INSTALL WALK-OFF MAT - SEE SPECIFICATIONS
127	MEN'S TOILET ROOM	CONCRETE	PORCELAIN TILE	PORCELAIN COVE	GYPSUM	TILE	GYPSUM	TILE	GYPSUM	TILE	GYPSUM	TILE	ACP-3	MANUFACTURER	9'-0"	SEE ADD ALTERNATES FOR ADDITIONAL INFORMATION.
128	WOMEN'S TOILET ROOM	CONCRETE	PORCELAIN TILE	PORCELAIN COVE	GYPSUM	TILE	GYPSUM	TILE	GYPSUM	TILE	GYPSUM	TILE	ACP-3	MANUFACTURER	9'-0"	SEE ADD ALTERNATES FOR ADDITIONAL INFORMATION.
201	CORRIDOR	CONCRETE	LVT	RUBBER	GYPSUM	PAINT	GYPSUM	PAINT	GYPSUM	PAINT	GYPSUM	PAINT	ACP-1	MANUFACTURER	9'-0"	-
202	CONFERENCE ROOM	CONCRETE	PORCELAIN TILE	PORCELAIN COVE	GYPSUM	PAINT	GYPSUM	PAINT	GYPSUM	PAINT	GYPSUM	PAINT	ACP-1	MANUFACTURER	9'-0"	CONTRACTOR TO PROVIDE CONTINUOUS CHAIR RAILS AT ALL WALLS - SEE DETAIL 2/A2 560
203A	COMPANY ROOM	CONCRETE	LVT	RUBBER	GYPSUM	PAINT	GYPSUM	PAINT	GYPSUM	PAINT	GYPSUM	PAINT	ACP-1	MANUFACTURER	12'-0"	-
203B	COMPANY KITCHEN	CONCRETE	PORCELAIN TILE	PORCELAIN COVE	GYPSUM	PAINT	GYPSUM	PAINT	GYPSUM	PAINT	GYPSUM	PAINT	ACP-3	MANUFACTURER	9'-0"	-
204	STORAGE	CONCRETE	LVT	RUBBER	GYPSUM	PAINT	GYPSUM	PAINT	GYPSUM	PAINT	GYPSUM	PAINT	ACP-1	MANUFACTURER	9'-0"	-
205	STORAGE	CONCRETE	LVT	RUBBER	GYPSUM	PAINT	GYPSUM	PAINT	GYPSUM	PAINT	GYPSUM	PAINT	ACP-1	MANUFACTURER	9'-0"	-
206	TRAINING ROOM	CONCRETE	PORCELAIN TILE	PORCELAIN COVE	GYPSUM	PAINT	GYPSUM	PAINT	GYPSUM	PAINT	GYPSUM	PAINT	ACP-1	MANUFACTURER	12'-0"	-
207	EXCERCISE ROOM	CONCRETE	RUBBER TILE	RUBBER	GYPSUM	PAINT	GYPSUM	PAINT	GYPSUM	PAINT	GYPSUM	PAINT	EXPOSED / ACP-2	PAINT / MANUFACTURER FINISH	VARIES	SEE RCP FOR LOCATION OF ACP CEILING AND EXPOSED DECK
208	BATHROOM	CONCRETE	PORCELAIN TILE	PORCELAIN COVE	GYPSUM	TILE	GYPSUM	TILE	GYPSUM	TILE	GYPSUM	TILE	ACP-3	MANUFACTURER	9'-0"	SEE ADD ALTERNATES FOR ADDITIONAL INFORMATION.
209	BATHROOM	CONCRETE	PORCELAIN TILE	PORCELAIN COVE	GYPSUM	TILE	GYPSUM	TILE	GYPSUM	TILE	GYPSUM	TILE	ACP-3	MANUFACTURER	9'-0"	SEE ADD ALTERNATES FOR ADDITIONAL INFORMATION.
210	CORRIDOR	CONCRETE	LVT	RUBBER	GYPSUM	PAINT	GYPSUM	PAINT	GYPSUM	PAINT	GYPSUM	PAINT	ACP-1	MANUFACTURER	9'-0"	-
211	COMISSIONERS OFFICE	CONCRETE	LVT	RUBBER	GYPSUM	PAINT	GYPSUM	PAINT	GYPSUM	PAINT	GYPSUM	PAINT	ACP-1	MANUFACTURER	9'-0"	CONTRACTOR TO PROVIDE CONTINUOUS CHAIR RAILS AT ALL WALLS - SEE DETAIL 7/A2 560
212	TRUSTEES OFFICE	CONCRETE	LVT	RUBBER	GYPSUM	PAINT	GYPSUM	PAINT	GYPSUM	PAINT	GYPSUM	PAINT	ACP-1	MANUFACTURER	9'-0"	CONTRACTOR TO PROVIDE CONTINUOUS CHAIR RAILS AT ALL WALLS - SEE DETAIL 7/A2 560
213	COMPANY OFFICERS	CONCRETE	LVT	RUBBER	GYPSUM	PAINT	GYPSUM	PAINT	GYPSUM	PAINT	GYPSUM	PAINT	ACP-1	MANUFACTURER	9'-0"	CONTRACTOR TO PROVIDE CONTINUOUS CHAIR RAILS AT ALL WALLS - SEE DETAIL 7/A2 560
214	ASST. CHIEF OFFICE	CONCRETE	LVT	RUBBER	GYPSUM	PAINT	GYPSUM	PAINT	GYPSUM	PAINT	GYPSUM	PAINT	ACP-1	MANUFACTURER	9'-0"	CONTRACTOR TO PROVIDE CONTINUOUS CHAIR RAILS AT ALL WALLS - SEE DETAIL 7/A2 560
215	CHIEF OFFICE	CONCRETE	LVT	RUBBER	GYPSUM	PAINT	GYPSUM	PAINT	GYPSUM	PAINT	GYPSUM	PAINT	ACP-1	MANUFACTURER	9'-0"	CONTRACTOR TO PROVIDE CONTINUOUS CHAIR RAILS AT ALL WALLS - SEE DETAIL 7/A2 560
216	ADMIN STORAGE	CONCRETE	LVT	RUBBER	GYPSUM	PAINT	GYPSUM	PAINT	GYPSUM	PAINT	GYPSUM	PAINT	ACP-1	MANUFACTURER	9'-0"	-
217	RATED STORAGE 1	CONCRETE	LVT	RUBBER	GYPSUM	PAINT	GYPSUM	PAINT	GYPSUM	PAINT	GYPSUM	PAINT	ACP-1	MANUFACTURER	9'-0"	-
218	RATED STORAGE 2	CONCRETE	LVT	RUBBER	GYPSUM	PAINT	GYPSUM	PAINT	GYPSUM	PAINT	GYPSUM	PAINT	ACP-1	MANUFACTURER	9'-0"	-
219	NETWORK I.T.	CONCRETE	LVT	RUBBER	GYPSUM	PAINT	GYPSUM	PAINT	GYPSUM	PAINT	GYPSUM	PAINT	ACP-1	MANUFACTURER	9'-0"	-
220	JANITORS CLOSET	CONCRETE	SEALER	RUBBER	GYPSUM	PAINT	GYPSUM	PAINT	GYPSUM	PAINT	GYPSUM	PAINT	ACP-3	MANUFACTURER	9'-0"	-
221	MEZZANINE	CONCRETE	SEALER	RUBBER	CMU	EPOXY PAINT	CMU	EPOXY PAINT	CMU	EPOXY PAINT	CMU	EPOXY PAINT	EXPOSED	PAINT	-	-
A	STAIR 'A'	CONCRETE	VARIES - SEE COMMENTS	RUBBER	GYPSUM	PAINT	GYPSUM	PAINT	GYPSUM	PAINT	GYPSUM	PAINT	ACP-1	MANUFACTURER	23'-0"	CONCRETE FLOOR TO RECEIVE PORCELAIN TILE. SEE SHEET A2 430 FOR STAIR FINISHES.
B	STAIR 'B'	CONCRETE	VARIES - SEE COMMENTS	RUBBER	GYPSUM	PAINT	GYPSUM	PAINT	GYPSUM	PAINT	GYPSUM	PAINT	ACP-1	MANUFACTURER	23'-0"	CONCRETE FLOOR TO RECEIVE PORCELAIN TILE. SEE SHEET A2 431 FOR STAIR FINISHES.

H2M architects + engineers

538 Broad Hollow Road, 4th Floor East
Melville, NY 11747
631.756.8000 • www.h2m.com

CONSULTANTS:

MARK	DATE	DESCRIPTION

REGISTERED ARCHITECT ROBERT BEE 032389 STATE OF NEW YORK

*ALTERATION OF THIS DOCUMENT EXCEPT BY A LICENSED PROFESSIONAL IS ILLEGAL.

DESIGNED BY:	DRAWN BY:	CHECKED BY:	REVIEWED BY:
KEM	JHG		

PROJECT No:	DATE:	SCALE:
VGFD2001	JULY 2022	AS SHOWN

CLIENT

VAILS GATE FIRE DISTRICT

New Storage Building (Phase I)
New Fire Station (Phase II)

872 Blooming Grove Turnpike
New Windsor, NY 12553

CONTRACT

CONTRACT G
GENERAL CONSTRUCTION

STATUS

FINAL BID DOCUMENT

SHEET TITLE

ARCHITECTURE
FINISH SCHEDULE, NOTES AND DETAILS
NEW FIRE STATION
PHASE 2

DRAWING No.

A2 600.00

C:\Users\jguzman\Documents\VGFD2001_Central21_A_jguzman.rvt
7/18/2022 8:21:13 AM

1 Front Entry Aluminum Signage
SCALE: 3/8" = 1'-0"

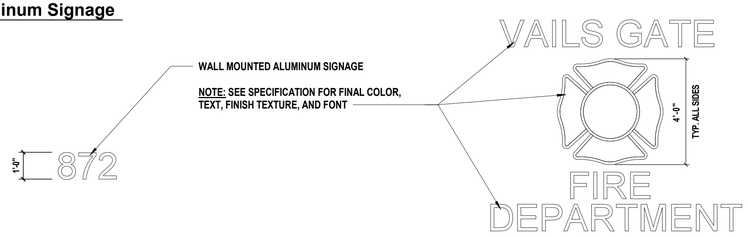

2 Aluminum Address Sigange
SCALE: 3/8" = 1'-0"

3 Rear Entry Aluminum Signage
SCALE: 3/8" = 1'-0"

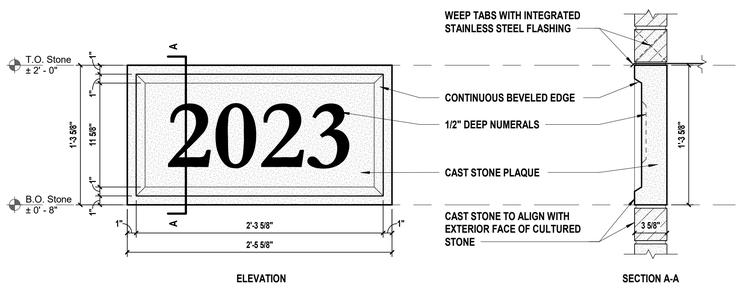

NOTE:

1. SEE SPECIFICATION FOR FINAL COLOR, TEXT, FINISH TEXTURE, AND FONT
2. CONTRACTOR TO INSTALL CAST STONE AS PER MANUFACTURERS REQUIREMENTS AND TO PROVIDE A WEATHERTIGHT SEAL
3. REFER TO CONCRETE NCMA TEK GUIDELINES FOR INSTALLATION METHODS FOR BRICK MASONRY / CAST STONE JOINTS

4 Date Stone Signage
SCALE: 1 1/2" = 1'-0"

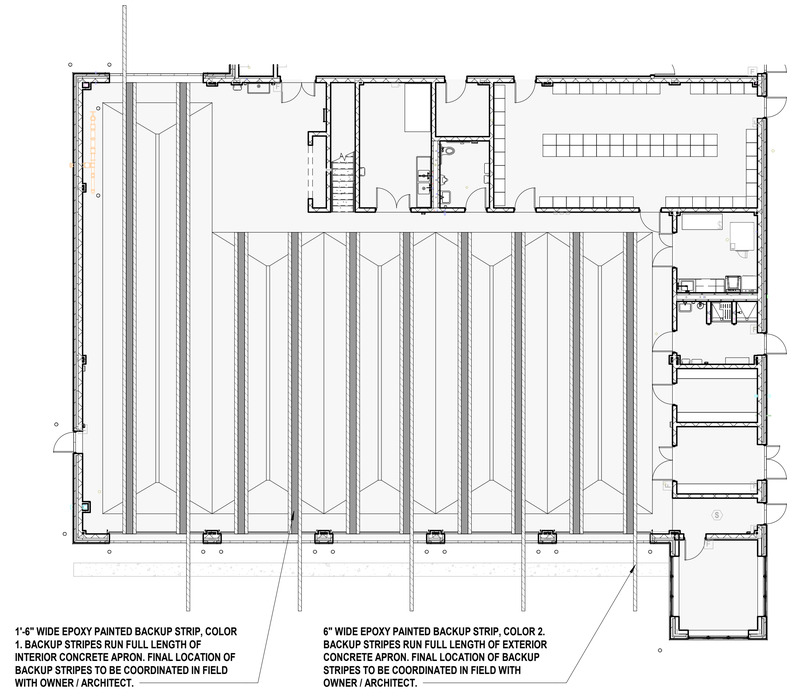

5 Apparatus Bay - Striping Plan
SCALE: 3/32" = 1'-0"

PROJECT NORTH

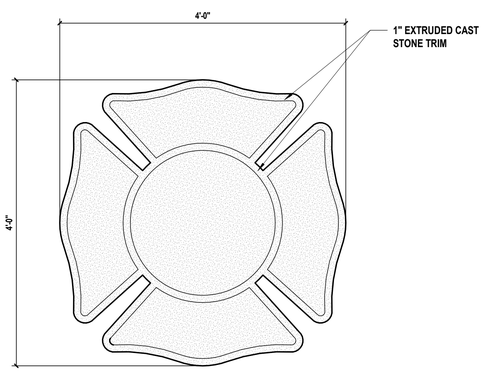

NOTE:

1. SEE SPECIFICATION FOR FINAL COLOR, TEXT, FINISH TEXTURE, AND FONT
2. CONTRACTOR TO INSTALL CAST STONE AS PER MANUFACTURERS REQUIREMENTS AND TO PROVIDE A WEATHERTIGHT SEAL
3. REFER TO CONCRETE NCMA TEK GUIDELINES FOR INSTALLATION METHODS FOR BRICK MASONRY / CAST STONE JOINTS

6 Cast Stone Maltese
SCALE: 1" = 1'-0"

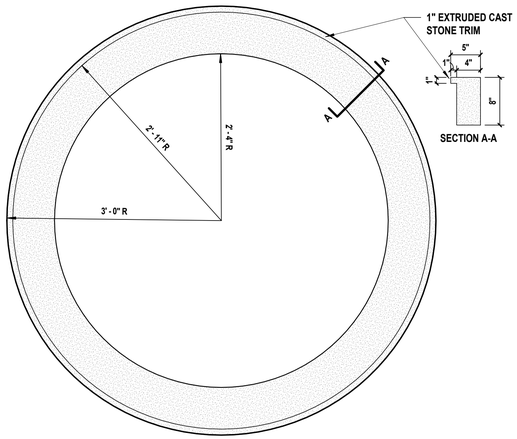

NOTE:

1. SEE SPECIFICATION FOR FINAL COLOR, TEXT, FINISH TEXTURE, AND FONT
2. CONTRACTOR TO INSTALL CAST STONE AS PER MANUFACTURERS REQUIREMENTS AND TO PROVIDE A WEATHERTIGHT SEAL
3. REFER TO CONCRETE NCMA TEK GUIDELINES FOR INSTALLATION METHODS FOR BRICK MASONRY / CAST STONE JOINTS

7 Cast Stone Circle
SCALE: 1" = 1'-0"

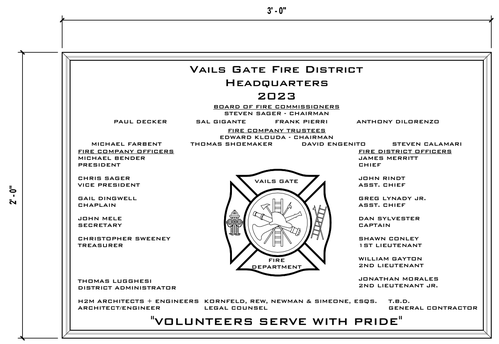

NOTES:

1. CAST ALUMINUM PLAQUE TO BE 24" X 36"
2. CONFIRM LOCATION WITH OWNER PRIOR TO INSTALLATION.
3. FINAL VISUAL, VERBIAGE, NAMES AND TEXT TO BE REVIEWED BY OWNER AND ARCHITECT DURING SHOP DRAWING PROCESS. DISPLAYED INFORMATION IS FOR REFERENCE ONLY.

8 Interior Building Plaque
SCALE:N.T.S

IDENTIFICATION IF BUILDING UTILIZING TRUSS CONSTRUCTION:

SIGNS IDENTIFYING THE EXISTENCE OF TRUSS CONST. SHALL CONSIST OF A CIRCLE 6" IN DIAMETER, WITH A STROKE WIDTH IF 1/2". THE SIGN BACKGROUND SHALL BE REFLECTIVE WHITE IN COLOR, CONFORMING TO PANTONE MATCHING SYSTEM (PMS) #187. WHERE A SIGN IS DIRECTLY APPLIED TO A DOOR OR SIDELIGHT, IT MAY BE PERMANENT NON-FADING STICKER OR DECAL. SIGNS NOT DIRECTLY APPLIED TO DOORS OR SIDELIGHTS SHALL BE STURDY, NON-FADING, WEATHER RESISTANT MATERIAL. SIGNS INDEMNIFYING THE EXISTENCE OF TRUSS CONSTRUCTION SHALL CONTAIN THE ROMAN ALPHANUMERIC DESIGNATION OF THE CONSTRUCTION TYPE OF THE BUILDING, IN ACCORDANCE WITH THE PROVISION FOR THE CLASSIFICATION OF TYPES OF CONSTRUCTION SET FORTH IN SECTION 602 OF THE BUILDING CODE OF NEW YORK STATE, AND AN ALPHABETIC DESIGNATION FOR THE STRUCTURAL COMPONENTS THAT ARE OF TRUSS CONSTRUCTION AS FOLLOWS:

"F" SHALL MEAN FLOOR FRAMING, INCLUDING GIRDERS AND BEAMS

"R" SHALL MEAN ROOF FRAMING

"FR" SHALL MEAN FLOOR AND ROOF FRAMING

THE CONSTRUCTION TYPE DESIGNATION SHALL BE PLACED AT THE TWELVE O' CLOCK POSITION OVER THE STRUCTURAL COMPONENT DESIGNATION, WHICH SHALL BE PLACED AT SIX O' CLOCK POSITION.

AT EXTERIOR BUILDING ENTRANCE DOORS, EXTERIOR EXIT DISCHARGE DOORS, AND EXTERIOR ROOF ACCESS DOORS TO A STAIRWAY, SIGNS SHALL BE ATTACHED TO DOOR, OR ATTACHED TO A SIDELIGHT OF THE FACE OF THE BUILDING NO MORE THEN 12 INCHES HORIZONTALLY FROM THE LATCH SIDE OF THE DOOR JAMB, AND NOT LESS THAN 42 INCHES OR MORE THAN 60 INCHES ABOVE THE ADJOINING WALKING SURFACE.

AT MULTIPLE CONTIGUOUS EXTERIOR BUILDING ENTRANCE OR EXIT DISCHARGE DOORS, SIGNS SHALL BE ATTACHED AT EACH END OF THE ROW OF DOORS AND AT A MAXIMUM HORIZONTAL DISTANCE OF 12 FEET BETWEEN SIGNS, AND NOT LESS THAN 42 INCHES NOR MORE THEN 60 INCHES ABOVE THE ADJOINING WALKING SURFACE.

9 Truss Identification Sign
SCALE:NTS

H2M architects + engineers
538 Broad Hollow Road, 4th Floor East
Melville, NY 11747
631.756.8000 • www.h2m.com

CONSULTANTS:

MARK	DATE	DESCRIPTION
2	12/22/2022	REVS. PER TOWN COMMENTS

REGISTERED ARCHITECT ROBERT BEE 032389 STATE OF NEW YORK

*ALTERATION OF THIS DOCUMENT EXCEPT BY A LICENSED PROFESSIONAL IS ILLEGAL.

DESIGNED BY:	DRAWN BY:	CHECKED BY:	REVIEWED BY:
KEM	JHG		
PROJECT No: VGFD2001	DATE: JULY 2022		SCALE: AS SHOWN

CLIENT
VAILS GATE FIRE DISTRICT

New Storage Building (Phase I)
New Fire Station (Phase II)

872 Blooming Grove Turnpike
New Windsor, NY 12553

CONTRACT
CONTRACT G
GENERAL CONSTRUCTION

STATUS
FINAL BID DOCUMENT

SHEET TITLE
ARCHITECTURE
NEW FIRE STATION
APPARATUS BAY STRIPING PLAN
AND EXTERIOR SIGNAGE
PHASE 2

DRAWING No.
A2 610.02

C:\Users\jguzman\Documents\VGFD2001_Central21_A_jguzmanR6622.rvt
12/22/2022 8:12:33 AM

PROJECT INFORMATION

CONSTRUCTION TYPE	IIB
OCCUPANCY	A-3 / B / S-2
SPRINKLER SYSTEM TYPE	13-2016

ABBREVIATIONS

AFF	ABOVE FINISHED FLOOR
CLG	CEILING
(D)	DEMOLISH
DCV	DOUBLE CHECK VALVE DEVICE
DIA	DIAMETER
DN	DOWN
(E)	EXISTING
EA	EACH
FD	FLOOR DRAIN
FP	FIRE PUMP
FT.	FEET
'GC'	GENERAL CONTRACTOR
GPM	GALLONS PER MINUTE
'H'	HVAC CONTRACTOR
HP	HORSEPOWER
HZ	HERTZ
JP	JOCKEY PUMP
IN.	INCHES
KW	KILOWATTS
LBS	POUNDS
M	METER
MAX	MAXIMUM
MIN	MINIMUM
NFPA	NATIONAL FIRE PROTECTION ASSOCIATION
NTS	NOT TO SCALE
OD	OUTER DIAMETER
(P)	PROPOSED
'P'	PLUMBING CONTRACTOR
RPM	REVOLUTIONS PER MINUTE
RPZ	REDUCED PRESSURE ZONE DEVICE
TYP	TYPICAL

LIGHT HAZARD - WET SYSTEM

APPLICABLE AREAS	OFFICES, CORRIDOR, MEETING ROOM, ETC.
DESIGN DENSITY	0.1 GPM PER SQ. F.T
AREA OF APPLICATION	1,500 SQ. FT.
HOSE DEMAND	100 GPM FOR 30-60 MINUTES

LIGHT HAZARD - DRY ATTIC

APPLICABLE AREAS	DRY ATTIC SPACES
DESIGN DENSITY	0.1 GPM PER SQ. F.T
AREA OF APPLICATION	1,500 SQ. FT. X 30% (DRY SYSTEM) + 30% (SLOPED ROOF)
HOSE DEMAND	100 GPM FOR 30-60 MINUTES

ORDINARY HAZARD - GROUP 2

APPLICABLE AREAS	FIRE TRUCK APPARATUS BAY
DESIGN DENSITY	0.2 GPM PER SQ. F.T
AREA OF APPLICATION	1,500 SQ. FT.
HOSE DEMAND	250 GPM FOR 60-90 MINUTES

ORDINARY HAZARD - GROUP 1

APPLICABLE AREAS	COMMERCIAL KITCHEN, STORAGE, ETC.
DESIGN DENSITY	0.15 GPM PER SQ. F.T
AREA OF APPLICATION	1,500 SQ. FT.
HOSE DEMAND	250 GPM FOR 60-90 MINUTES

SYMBOLS LIST

	GENERAL VALVE
	GATE VALVE (NON-RISING STEM)
	OS & Y GATE VALVE
	CHECK VALVE
	BUTTERFLY VALVE
	SOLENOID VALVE
	PRESSURE REGULATING VALVE
	POST INDICATOR VALVE
	DRAIN VALVE
	DRY PIPE VALVE
	DRY PIPE VALVE WITH QUICK OPENING DEVICE
	PREACTION DRY VALVE
	PREACTION VALVE
	BACKFLOW PREVENTER - DOUBLE CHECK VALVE
	BACKFLOW PREVENTER - REDUCED PRESSURE ZONE (RPZ)
	REDUCER
	ROOF MANIFOLD
	PRESSURE GAUGE
M	METER
	PUMP
	SPRINKLER PIPING AND BRANCH LINE - WET SYSTEM
	DRY SPRINKLER PIPING - DRY SYSTEM
	WATER MAIN UNDER BUILDING
	PIPE TRACE HEATER
	CAP END
	FLOW IN DIRECTION OF ARROW
	PIPE UP
	PIPE DOWN
	RISER
FDC	SIAMESE FIRE DEPARTMENT CONNECTION
FDC	FREE STANDING SIAMESE FIRE DEPARTMENT CONNECTION
	FREE STANDING TEST HEADER
	WALL MOUNTED TEST HEADER
	ALARM VALVE
	WATER MOTOR GONG
	HOSE STATION, WET STANDPIPE
	HOSE STATION, DRY STANDPIPE
	UPRIGHT SPRINKLER
	CONCEALED PENDENT SPRINKLER
	UPRIGHT SPRINKLER ON SPRIG
	PENDENT SPRINKLER ON SPRIG
	SPRINKLER WITH GUARD
	SIDEWALL SPRINKLER
	OUTSIDE SPRINKLER
	WINDOW SPRINKLERS
WF	FLOW DETECTOR / SWITCH
PS	PRESSURE DETECTOR / SWITCH
TS VS	TAMPER SWITCH / VALVE SUPERVISORY SWITCH
TS VS	VALVE WITH TAMPER SWITCH / VALVE SUPERVISORY SWITCH
FCVA	FLOW CONTROL VALVE ASSEMBLY
	THRUST BLOCK
	POINT OF CONNECTION
	POINT OF DISCONNECT
#	HYDRAULIC NODE

GENERAL SPRINKLER NOTES

1. ALL EQUIPMENT SHALL BE APPROVED AND LISTED FOR FIRE PROTECTION SERVICE.
2. PROVIDE A WATER SUPPLY LETTER WITH FLOW TEST DATA INDICATING DATE OF TEST AND DATA USED FOR HYDRAULIC CALCULATIONS.
3. THE CONTRACTOR IS RESPONSIBLE TO PREPARE APPLICATIONS, PAY FEES, AND OBTAIN ALL PERMITS AND APPROVALS AS REQUIRED. DESIGN AND INSTALL SYSTEMS COMPLETE AND IN WORKING ORDER, AND IN COMPLIANCE WITH THE REQUIREMENTS OF THE UNIFORM CODE, NFPA, LOCAL FIRE DEPARTMENT, AND AUTHORITY HAVING JURISDICTION.
4. FLOOR PLANS ARE PROVIDED FOR CONTRACTOR'S USE AS BACKGROUND DRAWINGS. CONTRACTOR SHALL REVIEW AND COORDINATE WORK WITH ALL OTHER BUILDING DRAWINGS AS REQUIRED TO PROVIDE A COMPLETE AUTOMATIC SPRINKLER PROTECTION IN THE AREAS OF WORK AS DESCRIBED IN SCOPE OF WORK AND IN THE PROJECT SPECIFICATIONS.
5. A FULLY COORDINATED SET OF FIRE SPRINKLER DESIGN DRAWINGS SHALL BE SUBMITTED TO THE ARCHITECT/ENGINEER AND AUTHORITY HAVING JURISDICTION FOR REVIEW.
7. THE CONTRACTOR'S MATERIAL AND TEST CERTIFICATES REQUIRED BY THE UNIFORM CODE AND NFPA FOR ABOVE GROUND AND UNDERGROUND PIPE SHALL BE SUBMITTED TO THE AUTHORITY HAVING JURISDICTION PRIOR TO APPROVAL OF THE INSTALLATION.
7. INSPECTION AND TESTS OF FIRE SUPPRESSION SYSTEM SHALL BE CONDUCTED AS SPECIFIED IN THE UNIFORM CODE AND NFPA. DOCUMENTATION OF ALL REQUIRED SYSTEMS INSPECTION AND TEST CERTIFICATES SHALL BE PROVIDED IN WRITING TO THE OWNER, ENGINEER AND AUTHORITY HAVING JURISDICTION.
8. PIPING SPECIFICATIONS, PIPE SCHEDULES, SYSTEM TEST PIPES, PROTECTION AGAINST CORROSION, DAMAGE FITTINGS, VALVES, HANGERS, SPRINKLERS, GUARDS AND SHIELDS SHALL BE IN ACCORDANCE NFPA 13, 2016 EDITION.
9. WET-PIPE FIRE SUPPRESSION SYSTEMS SHALL BE PROTECTED AGAINST FREEZING AT ALL TIMES. THE OWNER SHALL PROVIDE HEAT THROUGHOUT THE ENTIRE AREA WHERE WET-PIPE FIRE SUPPRESSION SYSTEMS ARE INSTALLED.
10. FIRE SUPPRESSION SYSTEMS, EQUIPMENT, AND APPURTENANCES SHALL BE PROTECTED AGAINST MECHANICAL DAMAGE.
11. THE CONTRACTOR IS RESPONSIBLE FOR PROVIDING AND INSTALLING ALL REQUIRED SIGNAGE AND HYDRAULIC NAMEPLATES. ALL VALVES SHALL BE IDENTIFIED AS REQUIRED BY THE UNIFORM CODE AND NFPA.
12. THE CONTRACTOR SHALL PROVIDE PERMANENT PROVISIONS TO FACILITATE FLUSHING SYSTEM PIPING BY PROVIDING FLUSHING CONNECTIONS.
13. ALL VALVES ON CONNECTIONS TO WATER SUPPLIES AND IN SUPPLY TO FIRE SUPPRESSION SYSTEMS SHALL BE APPROVED OS&Y OR APPROVED INDICATOR TYPE WITH FIRE ALARM SYSTEM SUPERVISORY SWITCHES. CONTRACTOR SHALL FURNISH AND INSTALL SUPERVISORY SWITCHES FOR ALL FIRE SUPPRESSION VALVES ON THE PROJECT.
14. WATER SUPPLY TEST PIPES AND GAUGES SHALL BE PROVIDED AS SPECIFIED IN NFPA 13-2016.
15. ALL PIPES PASSING THROUGH FOUNDATION WALLS SHALL BE PROTECTED. UNDERGROUND PIPING, INCLUDING WHERE IT ENTERS THE BUILDING, SHALL BE SUPPORTED AS SPECIFIED NY NFPA 24 PERTAINING TO RODDING, CLAMPING AND THRUST BLOCKING OF THE PIPE.
16. HANGING AND BRACING SPRINKLER SYSTEM SHALL BE IN ACCORDANCE WITH CHAPTER 9 OF NFPA 13-2016. SPRINKLER PIPING SHALL BE SUPPORTED BY ADJUSTABLE HANGERS AND SEISMIC BRACING PER THE UNIFORM CODE AND NFPA. LISTED FLEXIBLE COUPLINGS SHALL BE INSTALLED AT THE TOP AND BOTTOM OF ALL RISERS.
17. HANGERS SHALL BE OF A TYPE APPROVED FOR USE WITH THE PIPE OR TUBE INVOLVED AND APPROPRIATE FOR THE TYPE OF BUILDING CONSTRUCTION. SPRINKLER PIPING SHALL BE SUPPORTED BY ADJUSTABLE HANGERS PER NFPA.
18. CLEARANCES FOR WALL PENETRATIONS SHALL BE IN ACCORDANCE WITH NFPA 13-2016.
19. ALL PIPING PASSING THROUGH FIRE-RESISTANCE RATED CONSTRUCTION SHALL BE INSTALLED WITH UL LISTED MATERIALS AND ASSEMBLIES TO MAINTAIN THE REQUIRED RATING. MATERIALS AND INSTALLATION SHALL COMPLY WITH THE UNIFORM AND CONTRACT SPECIFICATIONS.
20. THE CONTRACTOR IS RESPONSIBLE FOR PAINTING FIRE PROTECTION PIPING IN ACCORDANCE WITH THE CONTRACT SPECIFICATIONS. ALL EXPOSED SPRINKLER PIPING SHALL BE PAINTED RED IN BACK-OF-HOUSE AREAS AND PAINTED TO MATCH ARCHITECTURAL FINISHES IN FINISHED AREAS. WHERE REQUIRED BY THE AUTHORITY HAVING JURISDICTION THE CONTRACTOR SHALL PAINT ALL PIPING RED, INCLUDING FIRE PROTECTION PIPING IN CHASES AND ALL OTHER ENCLOSED PIPING.
21. FIRE SUPPRESSION SYSTEMS SHALL BE ARRANGED TO DRAIN PROPERLY IN ACCORDANCE WITH THE UNIFORM CODE AND NFPA.
22. A ONE PIECE REDUCING FITTING OF GOOD DESIGN SHOULD BE USED WHEREVER A CHANGE IS MADE IN THE SIZE OF PIPE IN ACCORDANCE WITH NFPA.

SPRINKLER SYSTEM NOTES

1. THE CONTRACTOR IS RESPONSIBLE TO SUPPLY AND INSTALL COMPLETE AUTOMATIC SPRINKLER PROTECTION THROUGHOUT THE BUILDING.
2. ALL WORK SHALL BE PERFORMED AND INSTALLED IN ACCORDANCE WITH THE 2020 NEW YORK STATE FIRE PREVENTION AND BUILDING CODE (UNIFORM CODE, NYSUC) AND ITS REFERENCED STANDARDS, INCLUDING BUT NOT LIMITED TO, NFPA 13-2016 AND THE REQUIREMENTS OF THE AUTHORITY HAVING JURISDICTION. SYSTEMS SHALL BE DESIGNED AS OUTLINED IN THE IN CONTRACT DRAWINGS AND SPECIFICATIONS. THE SYSTEMS SHALL INCLUDE BACKFLOW PREVENTION, PUMPS, PIPING, FITTINGS, HANGERS, SPRINKLERS, ETC. AND ALL REQUIRED APPURTENANCES TO FORM A COMPLETE WORKING SYSTEM. THE INSTALLATION COMPONENTS, SIZING, SPACING, MATERIALS, LOCATION, CLEARANCES, POSITION, AND TYPE OF SYSTEM SHALL CONFORM TO NFPA 13-2016 AND THE REQUIREMENTS OF THE AUTHORITY HAVING JURISDICTION.
3. THE CONTRACTOR SHALL SUBMIT THE DESIGN DRAWINGS AND HYDRAULIC CALCULATIONS FOR THE SPRINKLER SYSTEM AS OUTLINED IN NFPA 13-2016 TO THE ENGINEER AND FOR APPROVAL TO THE AUTHORITY HAVING JURISDICTION. PLANS AND CALCULATIONS SHALL BE BY A NEW YORK STATE LICENSED PROFESSIONAL ENGINEER, WHOSE NAME AND LICENSE NUMBER SHALL BE CLEARLY INDICATED ON THE DRAWINGS AND CALCULATIONS. THE SPRINKLER CONTRACTOR SHALL BE LICENSED IN THE STATE OF NEW YORK AND THE LOCAL MUNICIPALITY.
4. ALL PIPING SHALL BE A MINIMUM OF 1-INCH.
5. PROVISIONS SHOULD BE MADE TO FACILITATE FLUSHING SYSTEM PIPING BY PROVIDING FLUSHING CONNECTIONS CONSISTING OF A CAPPED NIPPLE 4" LONG ON THE END OF THE CROSS MAIN.
6. A MINIMUM OF 18 INCHES MUST BE KEPT CLEAR BELOW SPRINKLERS TO TOP OF STORAGE.
7. SPACING, LOCATION AND POSITION OF SPRINKLERS SHALL BE IN ACCORDANCE WITH ALL REQUIRED OBSTRUCTION CRITERIA OF THE UNIFORM CODE AND NFPA.
8. CENTER SPRINKLER HEADS ON CEILING TILES.
9. SUSPENDED CEILING TILE SYSTEMS AND GYPSUM BOARD CEILINGS ARE SHOWN. ALL OTHER CEILINGS ARE OPEN TO THE STRUCTURE. REFER TO 'A' AND 'S' DRAWINGS FOR SECTIONS CLEARANCES, AND FINAL REFLECTED CEILING PLANS.
10. DISTANCE OF SPRINKLERS FROM HEAT SOURCES SHALL BE IN ACCORDANCE WITH NFPA.
11. SPRINKLER TEMPERATURE RATINGS SHALL BE ORDINARY UNLESS SPRINKLERS ARE EXPOSED TO HIGH TEMPERATURE EQUIPMENT. IN SUCH CASE, SPRINKLER TEMPERATURE RATINGS SHALL BE IN ACCORDANCE WITH NFPA.
12. ALL SPRINKLERS SHALL BE QUICK RESPONSE UNLESS OTHERWISE NOTED. THE USE OF QUICK RESPONSE AND STANDARD RESPONSE SPRINKLERS IN THE SAME SPACE IS NOT PERMITTED.
13. CONTRACTOR SHALL PROVIDE A SPRINKLER CABINET WITH SPRINKLER WRENCHES AND A STOCK OF EXTRA SPRINKLERS AS REQUIRED BY THE NFPA. THE QUANTITY AND TYPE OF OF WRENCHES SHALL BE AS REQUIRED BY NFPA, INCLUDING FOR EACH TEMPERATURE RATING.
14. STOCK OF EXTRA SPRINKLERS WILL BE FURNISHED AS PER NFPA.
15. SPRINKLER ALARMS SHALL BE INSTALLED IN ACCORDANCE WITH THE UNIFORM CODE AND NFPA.
16. ALL BLIND SPACES EXCEEDING 6 INCHES IN WIDTH OR DEPTH WHICH CONTAIN COMBUSTIBLE MATERIAL SHALL BE SPRINKLERED.
17. CONTRACTOR SHALL SPRINKLER ALL COMBUSTIBLE ABOVE-CEILING SPACES.
18. SYSTEM PIPING IS NOT PERMITTED TO BE RUN OVER ELECTRICAL PANELS OR TELECOMMUNICATIONS PANELS.

PERFORMANCE SPECIFICATION NOTES

1. QUANTITY OF SPRINKLER HEADS SHOWN ON DRAWINGS ARE TO SHOW DESIGN INTENT AND FOR REFERENCE ONLY AND SHALL NOT BE USED FOR BIDDING PURPOSES.

SPRINKLER SCHEDULE

SYMBOL	MANUFACTURER	MODEL	TYPE	SIN	K-FACTOR	SIZE	TEMPERATURE	COVERAGE	REQUIRED FLOW (GPM)	REQUIRED PRESSURE	FINISH
○	VIKING	MICROFAST QUICK RESPONSE	UPRIGHT	VK300	5.6	1/2"	155 DEG. F	REFER TO LISTING	REFER TO LISTING	7 PSI	BRASS
●	VIKING	MIRAGE QUICK RESPONSE	CONCEALED PENDENT	VK462	5.6	1/2"	155 DEG. F	REFER TO LISTING	REFER TO LISTING	7 PSI	WHITE COVERPLATE
▽	VIKING	MICROFAST QUICK RESPONSE	SIDEWALL	VK305	5.6	1/2"	155 DEG. F	REFER TO LISTING	REFER TO LISTING	7 PSI	BRASS
○ D	VIKING	QUICK RESPONSE	DRY UPRIGHT	VK184	5.6	1/2"	155 DEG. F	REFER TO LISTING	REFER TO LISTING	7 PSI	BRASS
▽ E	VIKING	MICROFAST QUICK RESPONSE EXTENDED COVERAGE	SIDEWALL	VK605	5.6	1/2"	155 DEG. F	REFER TO LISTING	REFER TO LISTING	21.6 PSI	BRASS

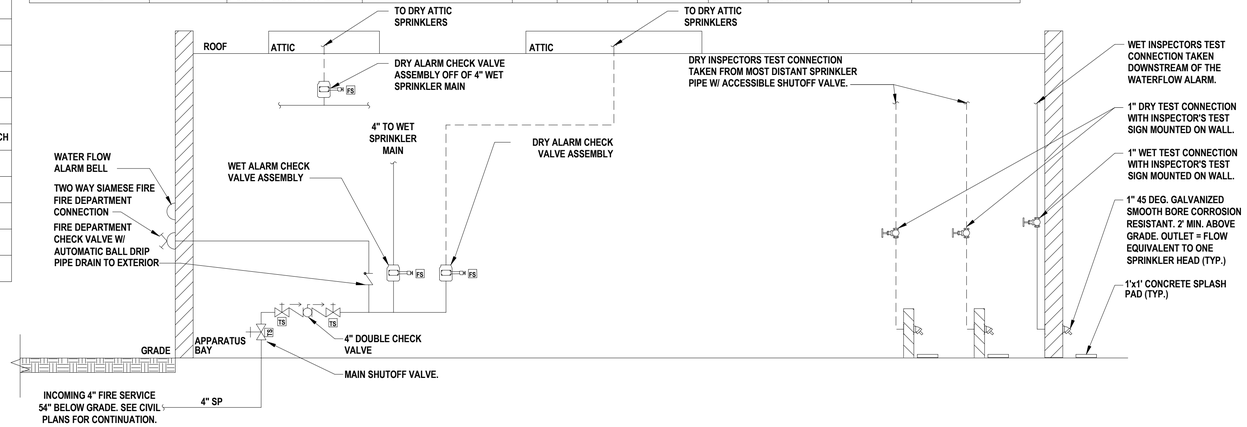

1 **Sprinkler Riser Diagram**
SCALE: NTS

H2M architects + engineers
538 Broad Hollow Road, 4th Floor East
Melville, NY 11747
631.756.8000 • www.h2m.com

CONSULTANTS:

MARK	DATE	DESCRIPTION
2	12/22/2022	REVS. PER TOWN COMMENTS

STATE OF NEW YORK · JONATHAN RICHARD WALSHORE · 096440-1 · LICENSED PROFESSIONAL ENGINEER

"ALTERATION OF THIS DOCUMENT EXCEPT BY A LICENSED PROFESSIONAL IS ILLEGAL"

DESIGNED BY:	DRAWN BY:	CHECKED BY:	REVIEWED BY:
JRM	KJE		
PROJECT No: VGFD2001	DATE: JULY 2022		SCALE: AS SHOWN

CLIENT
VAILS GATE FIRE DISTRICT

New Storage Building (Phase I)
New Fire Station (Phase II)

872 Blooming Grove Turnpike
New Windsor, NY 12553

CONTRACT
CONTRACT G
GENERAL CONSTRUCTION

STATUS
FINAL BID DOCUMENT

SHEET TITLE
FIRE PROTECTION GENERAL NOTES, LEGEND, ABBREVIATIONS, AND SCHEDULE

DRAWING No.
FP2 001.02

C:\Users\kescarraman\Documents\VGFD2001-Central21-P_Kescarraman.rvt
12/22/2022 2:39:26 PM

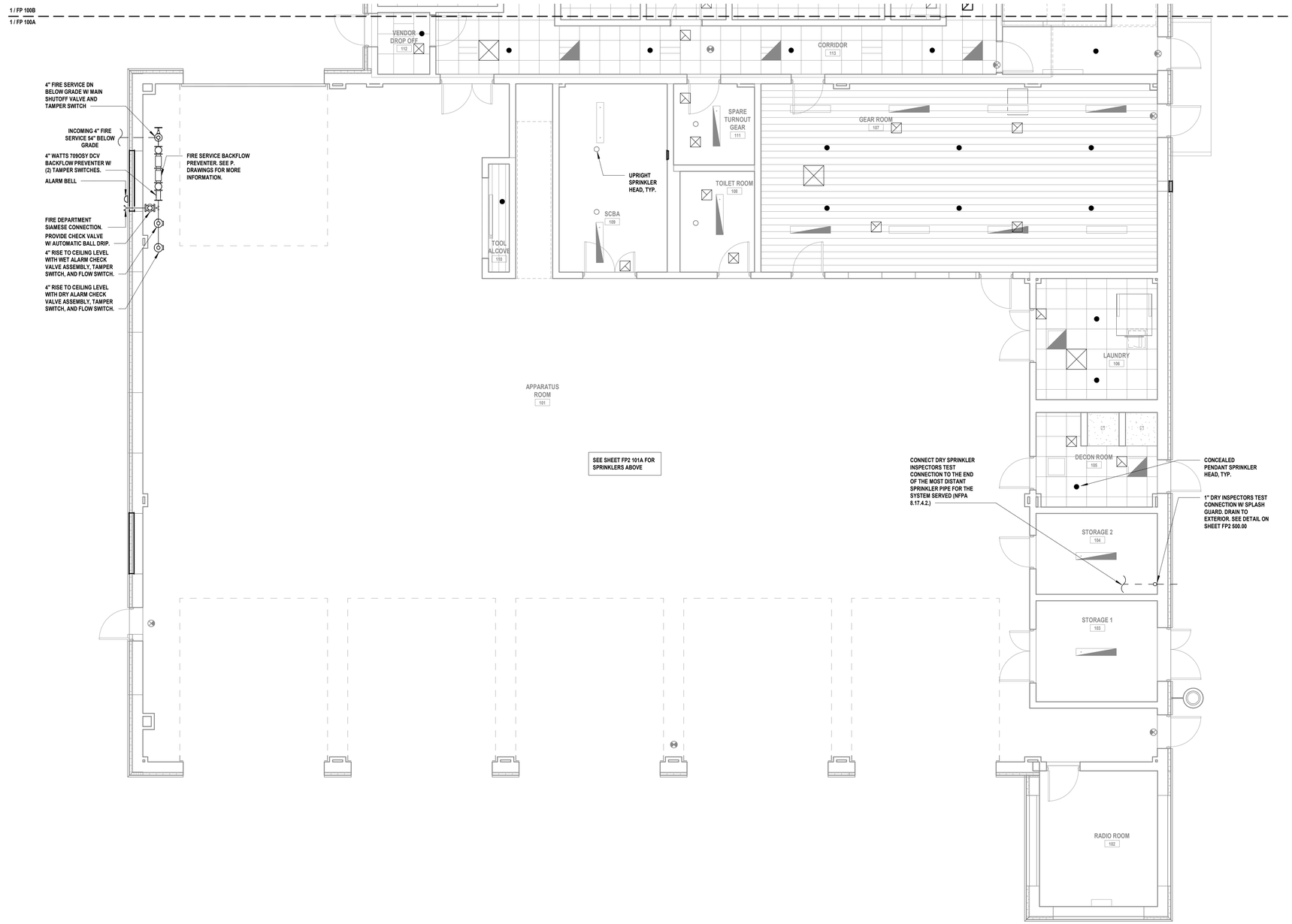

1 **Fire Protection First Floor Plan - Area A**
SCALE: 3/16" = 1'-0"

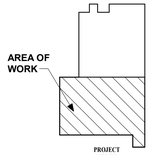

Key Plan

C:\Users\kescarraman\Documents\VGFD2001-Central21-P_Kescarraman.rvt

7/18/2022 8:12:12 AM

H2M architects + engineers

538 Broad Hollow Road, 4th Floor East
Melville, NY 11747
631.756.8000 • www.h2m.com

CONSULTANTS:

MARK	DATE	DESCRIPTION

STATE OF NEW YORK
JONATHAN RICHARD MURATORE
096440-1
LICENSED PROFESSIONAL ENGINEER

"ALTERATION OF THIS DOCUMENT EXCEPT BY A LICENSED PROFESSIONAL IS ILLEGAL."

DESIGNED BY:	DRAWN BY:	CHECKED BY:	REVIEWED BY:
Designer	Author		

PROJECT No:	DATE:	SCALE:
VGFD2001	JULY 2022	AS SHOWN

CLIENT
VAILS GATE FIRE DISTRICT

New Storage Building (Phase I)
New Fire Station (Phase II)

872 Blooming Grove Turnpike
New Windsor, NY 12553

CONTRACT
CONTRACT G
GENERAL CONSTRUCTION

STATUS
FINAL BID DOCUMENT

SHEET TITLE
FIRE PROTECTION
PARTIAL FIRST FLOOR PLAN
NEW FIRE HOUSE
PHASE 2

DRAWING No.
FP2 100A.00

1 Fire Protection First Floor Plan - Area B
SCALE: 3/16" = 1'-0"

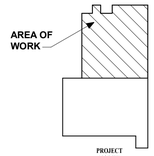

Key Plan

PROJECT NORTH

C:\Users\kescarraman\Documents\VGFD2001-Central21-P_Kescarraman.rvt

7/18/2022 8:12:15 AM

H2M architects + engineers

538 Broad Hollow Road, 4th Floor East
Melville, NY 11747
631.756.8000 • www.h2m.com

CONSULTANTS:

MARK	DATE	DESCRIPTION

STATE OF NEW YORK · JONATHAN RICHARD HUNT MORE · 096440-1 · LICENSED PROFESSIONAL ENGINEER

"ALTERATION OF THIS DOCUMENT EXCEPT BY A LICENSED PROFESSIONAL IS ILLEGAL"

DESIGNED BY:	DRAWN BY:	CHECKED BY:	REVIEWED BY:
JRM	KJE		

PROJECT No:	DATE:	SCALE:
VGFD2001	JULY 2022	AS SHOWN

CLIENT

VAILS GATE FIRE DISTRICT

New Storage Building (Phase I)
New Fire Station (Phase II)

872 Blooming Grove Turnpike
New Windsor, NY 12553

CONTRACT

CONTRACT G
GENERAL CONSTRUCTION

STATUS

FINAL BID DOCUMENT

SHEET TITLE

FIRE PROTECTION
PARTIAL FIRST FLOOR PLAN
NEW FIRE HOUSE
PHASE 2

DRAWING No.

FP2 100B.00

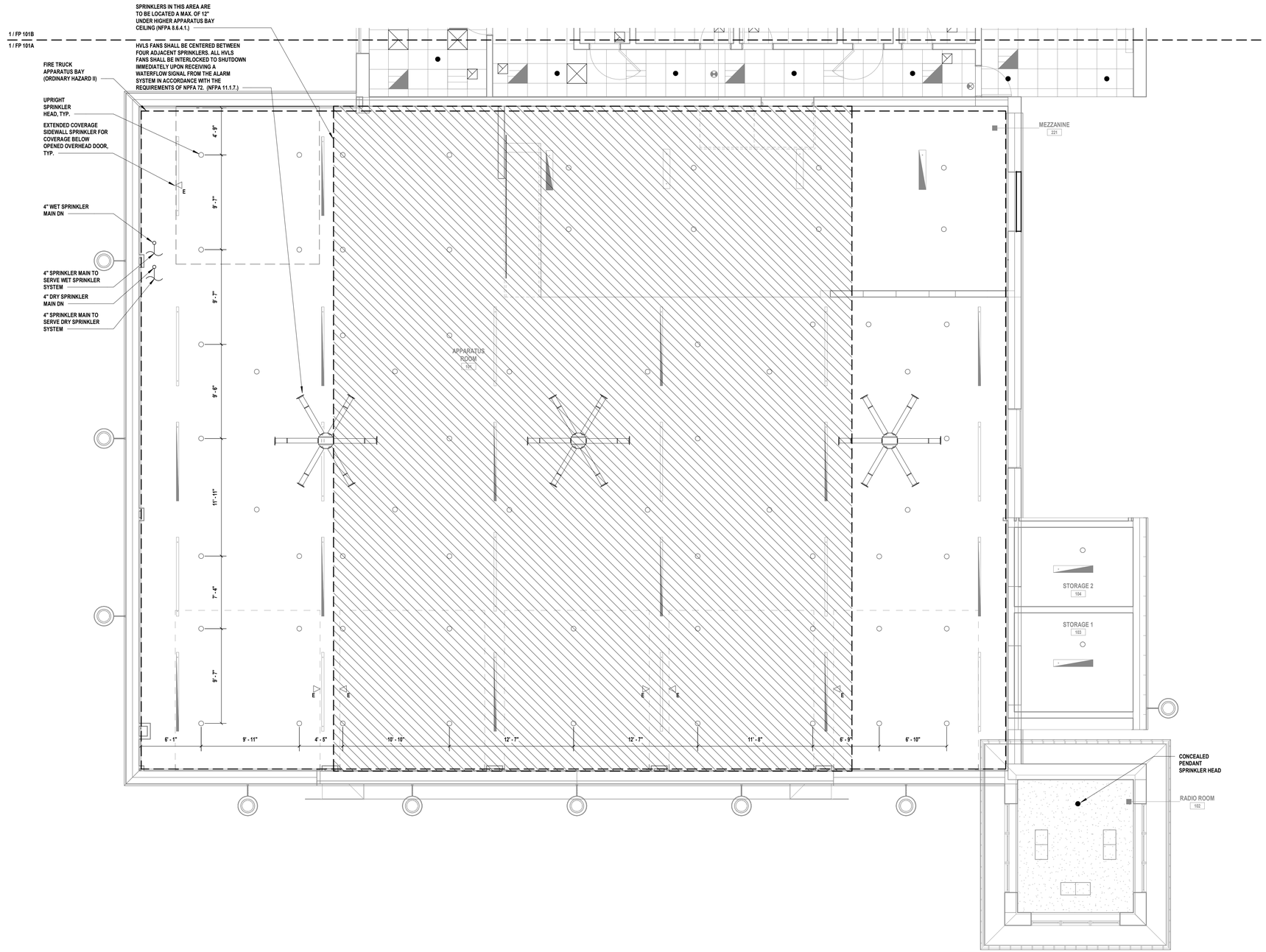

1 Fire Protection Second Floor Plan - Area A

SCALE: 3/16" = 1'-0"

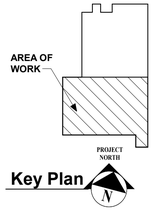

Key Plan

C:\Users\kescarraman\Documents\VGFD2001-Central21-P_Kescarraman.rvt

7/18/2022 8:12:18 AM

H2M architects + engineers

538 Broad Hollow Road, 4th Floor East
Melville, NY 11747
631.756.8000 • www.h2m.com

CONSULTANTS:

MARK	DATE	DESCRIPTION

STATE OF NEW YORK · JONATHAN RICHARD MOORE · 096440-1 · LICENSED PROFESSIONAL ENGINEER

"ALTERATION OF THIS DOCUMENT EXCEPT BY A LICENSED PROFESSIONAL IS ILLEGAL"

DESIGNED BY:	DRAWN BY:	CHECKED BY:	REVIEWED BY:
JRM	KJE		

PROJECT No:	DATE:	SCALE:
VGFD2001	JULY 2022	AS SHOWN

CLIENT

VAILS GATE FIRE DISTRICT

New Storage Building (Phase I)
New Fire Station (Phase II)

872 Blooming Grove Turnpike
New Windsor, NY 12553

CONTRACT

CONTRACT G
GENERAL CONSTRUCTION

STATUS

FINAL BID DOCUMENT

SHEET TITLE

FIRE PROTECTION
PARTIAL SECOND FLOOR PLAN
NEW FIRE HOUSE
PHASE 2

DRAWING No.

FP2 101A.00

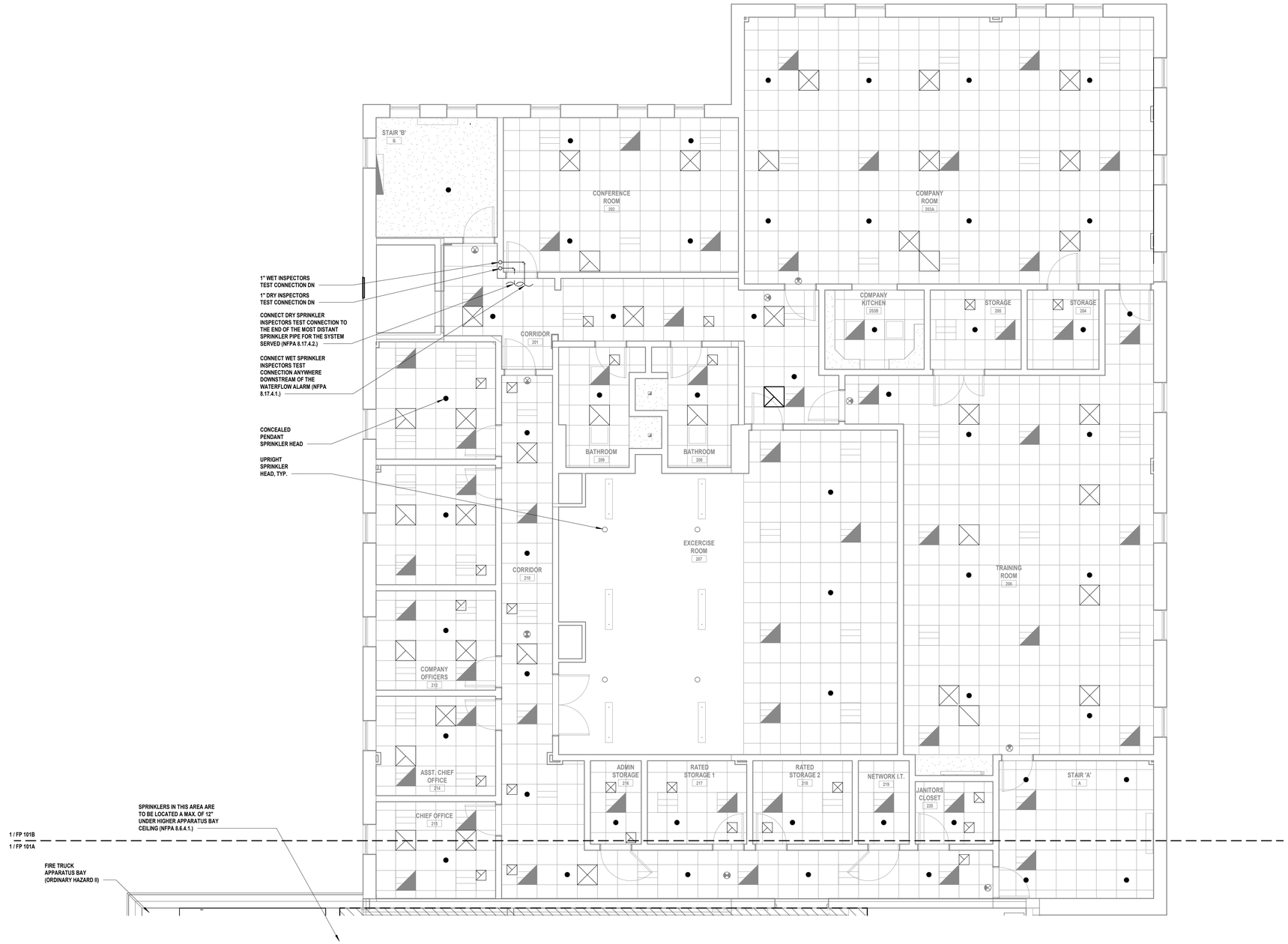

1 **Fire Protection Second Floor Plan - Area B**
SCALE: 3/16" = 1'-0"

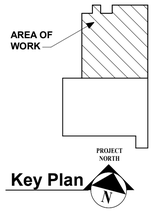

Key Plan

H2M architects + engineers
538 Broad Hollow Road, 4th Floor East
Melville, NY 11747
631.756.8000 • www.h2m.com

CONSULTANTS:

MARK	DATE	DESCRIPTION

STATE OF NEW YORK
JONATHAN RICHARD MURATORE
096440-1
LICENSED PROFESSIONAL ENGINEER

"ALTERATION OF THIS DOCUMENT EXCEPT BY A LICENSED PROFESSIONAL IS ILLEGAL."

DESIGNED BY:	DRAWN BY:	CHECKED BY:	REVIEWED BY:
JRM	KJE		

PROJECT No:	DATE:	SCALE:
VGFD2001	JULY 2022	AS SHOWN

CLIENT
VAILS GATE FIRE DISTRICT

New Storage Building (Phase I)
New Fire Station (Phase II)

872 Blooming Grove Turnpike
New Windsor, NY 12553

CONTRACT
CONTRACT G
GENERAL CONSTRUCTION

STATUS
FINAL BID DOCUMENT

SHEET TITLE
FIRE PROTECTION
PARTIAL SECOND FLOOR PLAN
NEW FIRE HOUSE
PHASE 2

DRAWING No.
FP2 101B.00

C:\Users\kescarraman\Documents\VGFD2001-Central21-P_Kescarraman.rvt
7/18/2022 8:12:19 AM

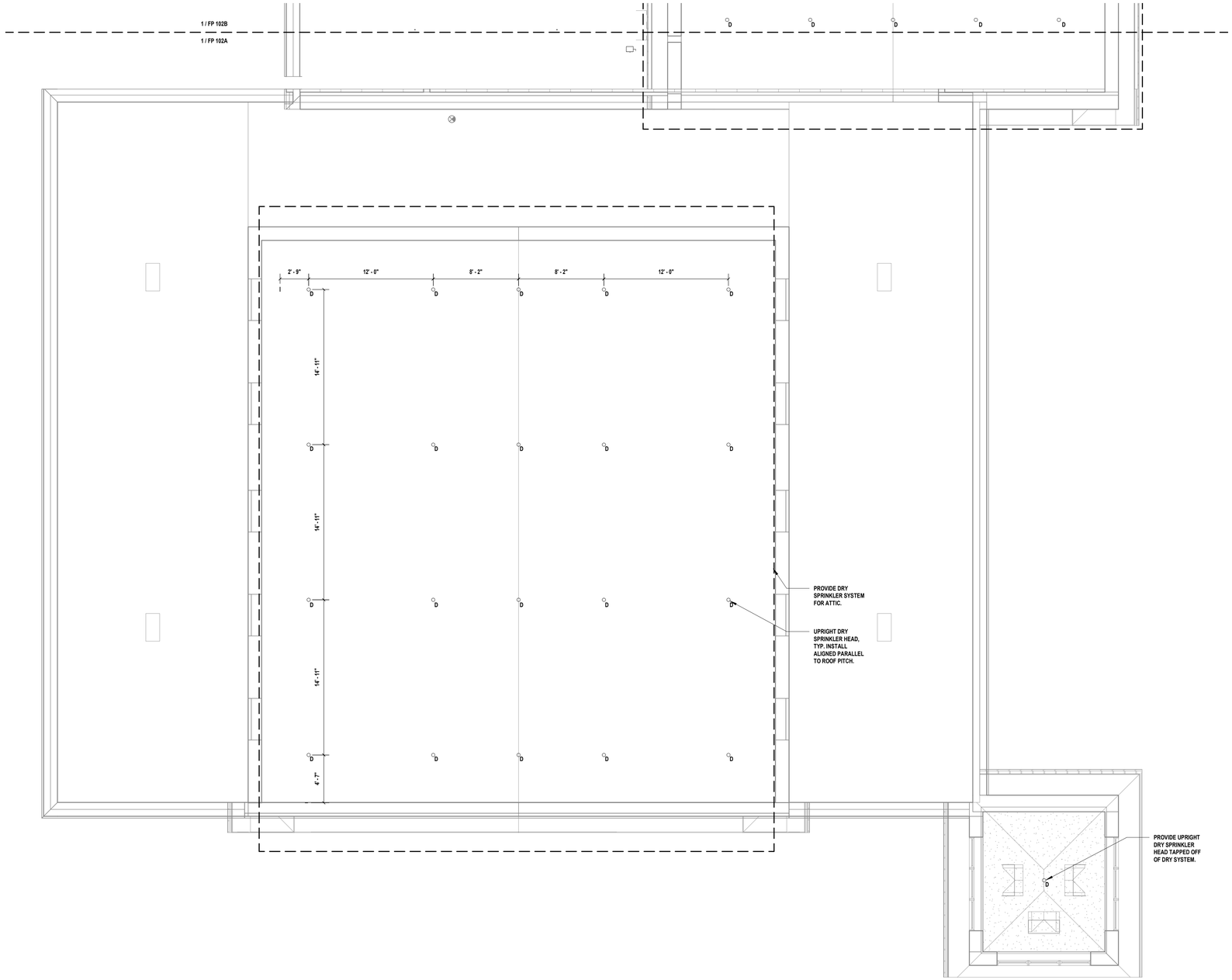

1 **Fire Protection Attic Plan - Area A**
SCALE: 3/16" = 1'-0"

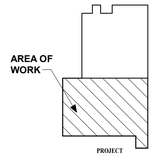

Key Plan

H2M architects + engineers

538 Broad Hollow Road, 4th Floor East
Melville, NY 11747
631.756.8000 • www.h2m.com

CONSULTANTS:

MARK	DATE	DESCRIPTION

"ALTERATION OF THIS DOCUMENT EXCEPT BY A LICENSED PROFESSIONAL IS ILLEGAL."

DESIGNED BY:	DRAWN BY:	CHECKED BY:	REVIEWED BY:
JRM	KJE		

PROJECT No:	DATE:	SCALE:
VGFD2001	JULY 2022	AS SHOWN

CLIENT
VAILS GATE FIRE DISTRICT

New Storage Building (Phase I)
New Fire Station (Phase II)

872 Blooming Grove Turnpike
New Windsor, NY 12553

CONTRACT
CONTRACT G
GENERAL CONSTRUCTION

STATUS
FINAL BID DOCUMENT

SHEET TITLE
FIRE PROTECTION
PARTIAL ATTIC PLAN
NEW FIRE HOUSE
PHASE 2

DRAWING No.
FP2 102A.00

C:\Users\kescarraman\Documents\VGFD2001-Central21-P_Kescarraman.rvt
7/18/2022 8:12:20 AM

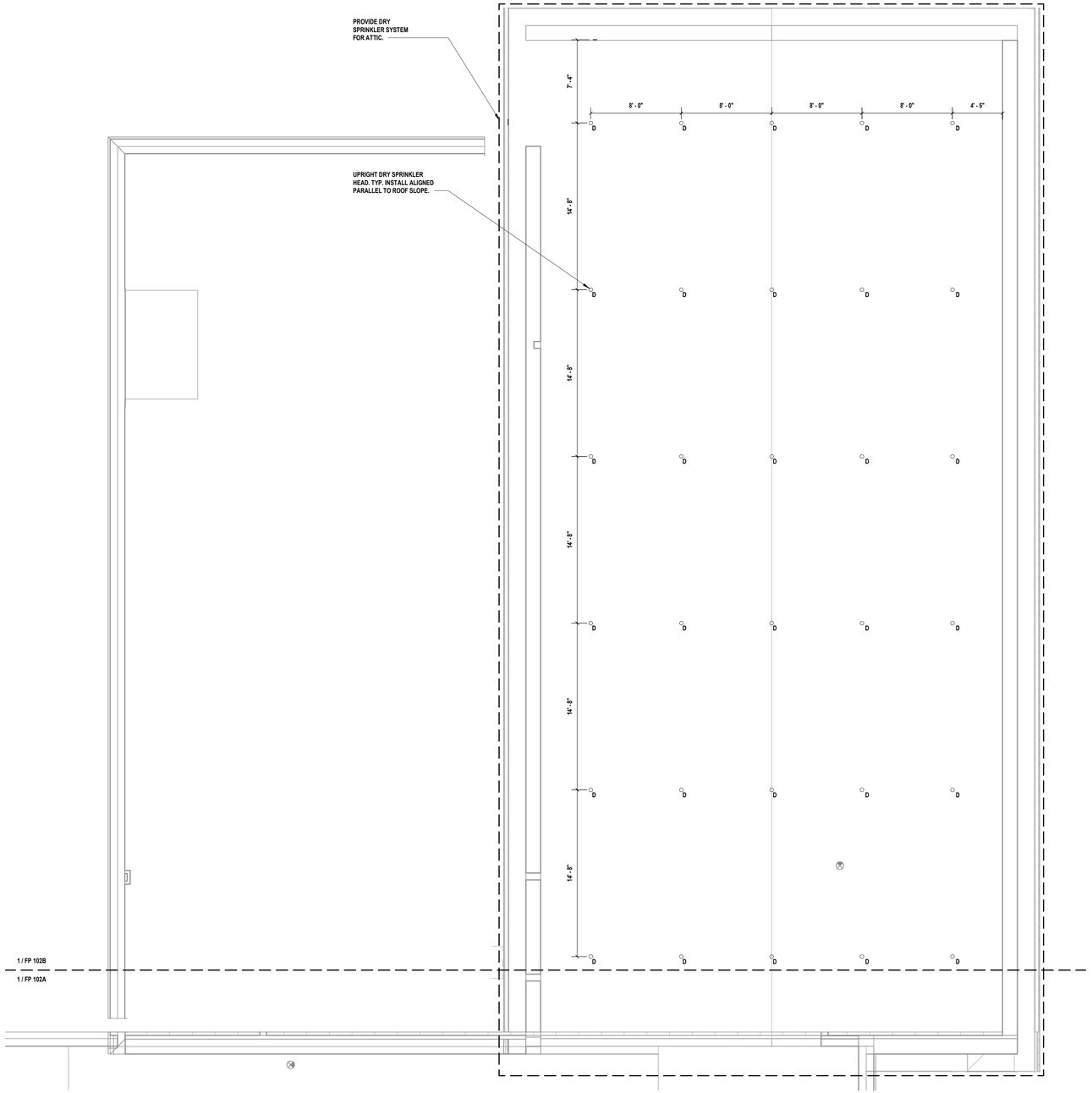

1 **Fire Protection Attic Plan - Area B**
SCALE: 3/16" = 1'-0"

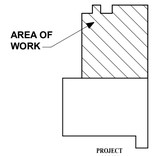

Key Plan

H2M architects + engineers

538 Broad Hollow Road, 4th Floor East
Melville, NY 11747
631.756.8000 • www.h2m.com

CONSULTANTS:

MARK	DATE	DESCRIPTION

"ALTERATION OF THIS DOCUMENT EXCEPT BY A LICENSED PROFESSIONAL IS ILLEGAL."

DESIGNED BY:	DRAWN BY:	CHECKED BY:	REVIEWED BY:
JRM	KJE		

PROJECT No:	DATE:	SCALE:
VGFD2001	JULY 2022	AS SHOWN

CLIENT
VAILS GATE FIRE DISTRICT

New Storage Building (Phase I)
New Fire Station (Phase II)

872 Blooming Grove Turnpike
New Windsor, NY 12553

CONTRACT
CONTRACT G
GENERAL CONSTRUCTION

STATUS
FINAL BID DOCUMENT

SHEET TITLE
FIRE PROTECTION
PARTIAL ATTIC PLAN
NEW FIRE HOUSE
PHASE 2

DRAWING No.
FP2 102B.00

C:\Users\kescarraman\Documents\VGFD2001-Central21-P_Kescarraman.rvt
7/18/2022 8:12:21 AM

NOTES:

1. CONCRETE BLOCKING SHALL BE APPLIED ON ALL PIPE LINES 4-INCH IN DIAMETER AND LARGER AT ALL TEES, PLUGS, CAPS, AND AT BENDS DEFLECTING 22-1/2 DEGREES OR MORE. BLOCKING SHALL BE OF CONCRETE OF A MIX HAVING A COMPRESSIVE STRENGTH OF NOT LESS THAN 4,000 PSI, AND BLOCKING SHALL BE PLACED BETWEEN SOLID GROUND AND THE FITTING TO BE ANCHORED. THE BLOCKING SHALL BE SO PLACED THAT THE PIPE AND FITTING JOINTS WILL BE ACCESSIBLE FOR REPAIR.
2. THE SQUARE FOOT BEARING AREA OF THE BLOCK ON SOLID GROUND SHALL BE AS INDICATED IN THE FOLLOWING TABLE AND SHALL MEET THE MINIMUM SIZE REQUIREMENT OF NFPA 24 A.10.8.2 FOR THRUST BLOCKS.
3. FOR ALL VERTICAL BENDS 3/4-INCH DIAMETER TIE RODS AND PIPE CLAMPS OR RETAINED GLANDS SHALL BE PROVIDED IN ADDITION TO THE CONCRETE BLOCKING SPECIFIED ABOVE FOR BENDS DEFLECTING 22-1/2 DEGREES OR MORE.

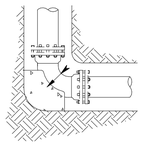

PIPE SIZE	DEAD END OR TEE	90 DEG. BEND	45 DEG. BEND	22-1/2 DEG. BEND
4"	1	1 1/2	3/4	1/2
6"	2	3	2	1
8"	4	5-1/2	3	1
10"	6	8-1/2	4-1/2	2-1/2
12"	9	12	6-1/2	3-1/2
16"	12	15-1/2	8-1/2	4-1/2

1 Fire Service Restraining
SCALE:NTS

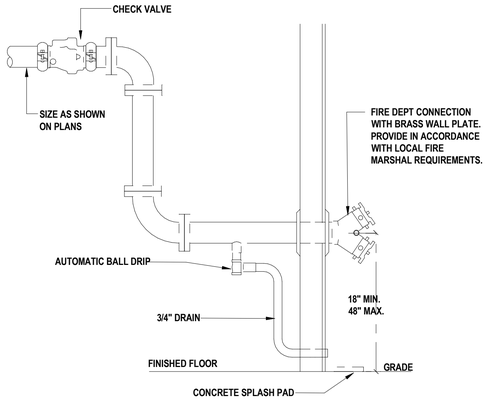

2 Fire Department Connection
SCALE:NTS

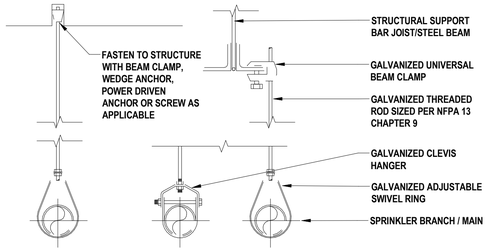

MAXIMUM DISTANCE BETWEEN HANGERS - STEEL PIPE EXCEPT THREADED LIGHTWALL									
PIPE SIZE	1 IN	1-1/4 IN	1-1/2 IN	2 IN	2-1/2 IN	3	4	6	8
SPACING	12 FT	12 FT	15 FT	15 FT	15 FT	15 FT	15 FT	15 FT	15 FT

MAXIMUM UNSUPPORTED LENGTH BETWEEN END SPRINKLER AND THE LAST HANGER			
PIPE SIZE	1 IN	1-1/4 IN	1-1/2 IN AND LARGER
SPACING	12 FT	12 FT	15 FT

REFER TO NFPA 13 FOR COMPLETE HANGER INSTALLATION REQUIREMENTS.

3 Hanger Detail
SCALE:NTS

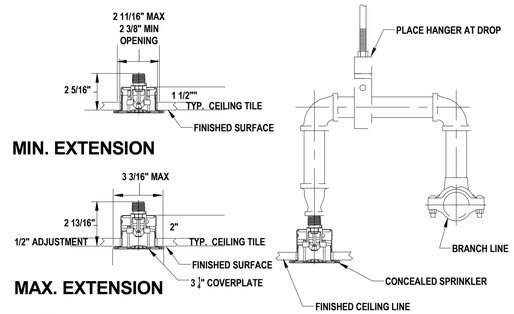

NOTES:

1. ADJUST SPRINKLER DROPS AS NECESSARY TO CLEAR OBSTRUCTIONS SUCH AS "T" BAR SUSPENSION SYSTEM, LIGHT FIXTURES, ETC. PROVIDE A PIPE HANGER IF THE HORIZONTAL OFFSET LENGTH EXCEEDS 24 INCHES.
2. THIS SPRINKLER DROP IS APPLICABLE ONLY WHERE IT IS NOT NECESSARY TO INSTALL AN UPRIGHT SPRINKLER ABOVE THE CEILING FOR PROTECTION OF COMBUSTIBLE CEILING CONSTRUCTION.

4 Concealed Pendant Sprinkler Detail
SCALE:NTS

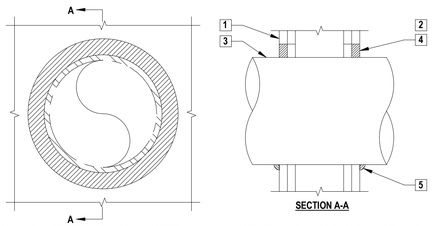

1. GYPSUM WALL ASSEMBLY (UL/cUL CLASSIFIED U300 OR U400 SERIES) (1-HR. OR 2-HR. FIRE-RATING) (2-HR. SHOWN).
2. [NOT SHOWN] WOOD STUDS TO CONSIST OF NOMINAL 2" X 4" LUMBER. STEEL STUDS TO BE MINIMUM 2-1/2" WIDE.
3. PENETRATING ITEM TO BE ONE OF THE FOLLOWING:
   A. MAXIMUM 30" DIAMETER STEEL PIPE (SCHEDULE 10 OR HEAVIER).
   B. MAXIMUM 30" DIAMETER CAST IRON PIPE.
   C. MAXIMUM 6" NOMINAL DIAMETER COPPER PIPE.
   D. MAXIMUM 6" NOMINAL DIAMETER STEEL CONDUIT.
   E. MAXIMUM 4" NOMINAL DIAMETER EMT.
4. MINIMUM 5/8" DEPTH HILTI FS-ONE INTUMESCENT FIRESTOP SEALANT.
5. MINIMUM 1/2" BEAD HILTI FS-ONE INTUMESCENT FIRESTOP SEALANT APPLIED AT POINT OF CONTACT.

UL/cUL SYSTEM NO. W-L-1054
F-RATING = 1-HR. OR 2-HR.

NOTES:
1. MAXIMUM DIAMETER OF OPENING:
   A. 32-1/4" FOR STEEL STUD WALLS.
   B. 14-1/2" FOR WOOD STUD WALLS.
2. ANNULAR SPACE = MINIMUM 0", MAXIMUM 2-1/4".
3. PIPE MAY BE INSTALLED WITH CONTINUOUS POINT OF CONTACT.
4. PIPE MAY BE INSTALLED AT AN ANGLE NOT GREATER THAN 45° FROM PERPENDICULAR.

5 Metal Pipe Through Gypsum Wall Assembly
SCALE:NTS

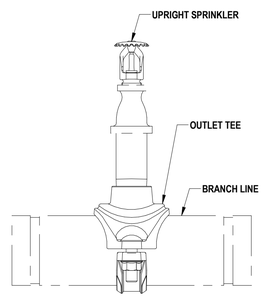

6 Upright Sprinkler Detail
SCALE:NTS

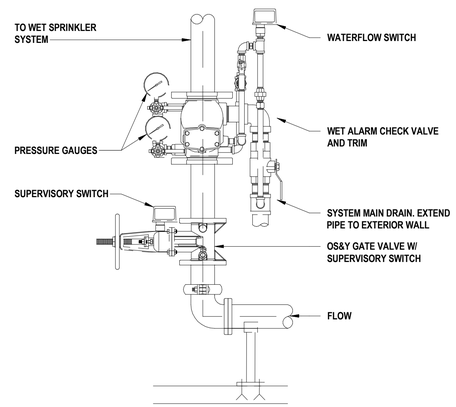

7 Wet Alarm Check Valve
SCALE:NTS

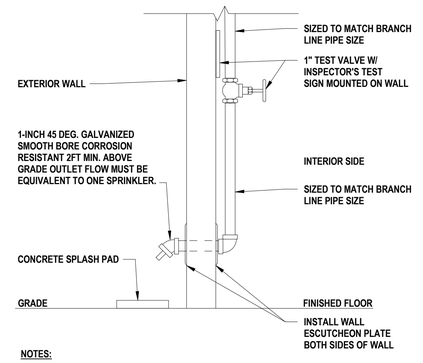

NOTES:

1. NOT LESS THAN 4 FT OF EXPOSED TEST PIPE IN WARM ROOM BEYOND VALVE.
2. PROVIDE CONCRETE SPLASH PAD BELOW OUTLET.

8 Wet System Inspector's Test Connection Detail
SCALE:
NTS

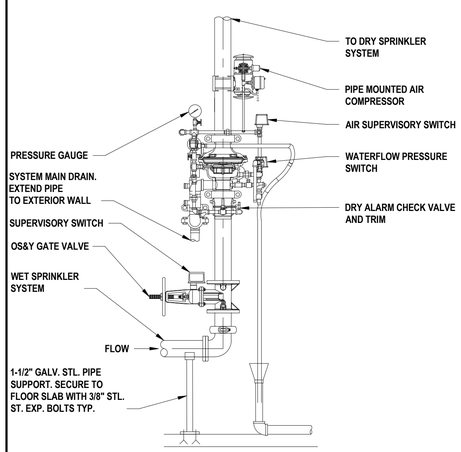

9 Dry Alarm Check Valve Detail
SCALE:
NTS

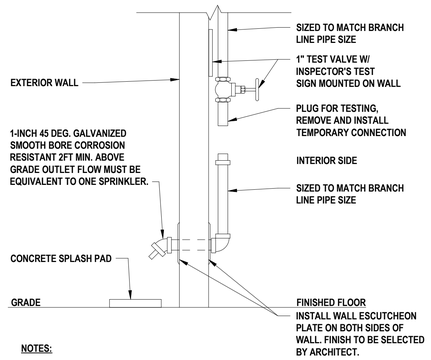

NOTES:

1. TO MINIMIZE CONDENSATION OF WATER IN THE DROP TO THE TEST CONNECTION, PROVIDE A NIPPLE-UP OFF OF THE BRANCH LINE.
2. PROVIDE CONCRETE SPLASH PAD BELOW OUTLET.

10 Dry System Inspector's Test Connection Detail
SCALE:
NTS

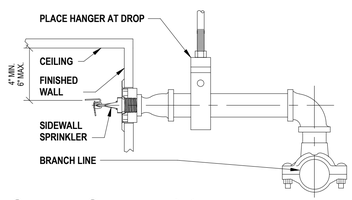

11 Sidewall Sprinkler Detail
SCALE:
NTS

H 2 M architects + engineers

538 Broad Hollow Road, 4th Floor East
Melville, NY 11747
631.756.8000 • www.h2m.com

CONSULTANTS:

MARK	DATE	DESCRIPTION

STATE OF NEW YORK · JONATHAN RICHARD KUHLMORE · 096440-1 · LICENSED PROFESSIONAL ENGINEER

"ALTERATION OF THIS DOCUMENT EXCEPT BY A LICENSED PROFESSIONAL IS ILLEGAL"

DESIGNED BY:	DRAWN BY:	CHECKED BY:	REVIEWED BY:
JRM	KJE		
PROJECT No: VGFD2001	DATE: JULY 2022		SCALE: AS SHOWN

CLIENT

VAILS GATE FIRE DISTRICT

New Storage Building (Phase I)
New Fire Station (Phase II)

872 Blooming Grove Turnpike
New Windsor, NY 12553

CONTRACT

CONTRACT G
GENERAL CONSTRUCTION

STATUS

FINAL BID DOCUMENT

SHEET TITLE

FIRE PROTECTION DETAILS

DRAWING No.

FP2 500.00

C:\Users\kescarraman\Documents\VGFD2001-Central21-P_Kescarraman.rvt

7/18/2022 8:12:21 AM

LEGEND

SYMBOL	DESCRIPTION
	PIPING UP
	PIPING DOWN
	PIPING RISE OR DROP
	BRANCH-TOP CONNECTION
	BRANCH-BOTTOM CONNECTION
	REDUCER
CO CO	CLEANOUT
	FLOOR CLEANOUT
	CAPPED PIPE
M	METER
	FLOOR DRAIN
	AQUASTAT
	PUMP
	STRAINER
	UNION
	THERMOSTATIC MIXING VALVE
	BALANCING VALVE (BLV)
	GLOBE VALVE (GLV)
	CHECK VALVE (CV)
	GAS COCK, GAS STOP
	BALL VALVE (BV)
	BUTTERFLY VALVE (BFV)
S	SOLENOID VALVE
	PRESSURE-REDUCING VALVE (PRV)
	GATE VALVE (GV)
	PRESSURE-RELIEF VALVE (RV)
	BACKFLOW PREVENTER
	FROST FREE HOSE BIBB
	HOSE BIBB
	RECESSED-BOX HOSE BIBB OR WALL HYDRANT
	EXPANSION JOINT
	WATER HAMMER ARRESTER
	VALVE IN RISER
CO	WALL CLEANOUT (WCO)
	PITCH DOWN OR UP IN DIRECTION OF ARROW
	FLOW IN DIRECTION OF ARROW
	COLD WATER (CW)
	TEMPERED WATER (TW)
	HOT WATER (HW)
	TEMPERED WATER RETURN (TWR)
	HOT WATER RETURN (HWR)
	WASTE PIPING (W,S,OW)
	BELOW SLAB WASTE PIPING
	VENT PIPING (V)
	GAS PIPING (G)
	TO BE REMOVED
	POINT OF CONNECTION
	POINT OF DISCONNECTION

ABBREVIATIONS

AFF	ABOVE FINISHED FLOOR
BTU	BRITISH THERMAL UNIT
BTUH	BTU PER HOUR
CLG	CEILING
CO	CLEAN OUT
CODP	CLEAN OUT DECK PLATE
COWP	CLEAN OUT WALL PLATE
CW	COLD WATER
(D)	DEMOLISH
DCV	DOUBLE CHECK VALVE DEVICE
DEG. F	° FAHRENHEIT
DIA	DIAMETER
DN	DOWN
(E)	EXISTING
EA	EACH
FAI	FRESH AIR INTAKE
FD	FLOOR DRAIN
G	GAS
'GC'	GENERAL CONSTRUCTION CONTRACTOR
GPM	GALLONS PER MINUTE
GPH	GALLONS PER HOUR
'H'	HVAC CONTRACTOR
HP	HORSEPOWER
HW	HOT WATER
HWR	HOT WATER RETURN
IN.	INCHES
IN. W.C. (W.G.)	INCHES WATER COLUMN (WATER GAUGE)
KW	KILOWATTS
LBS	POUNDS
M	METER
MAX	MAXIMUM
MIN	MINIMUM
NTS	NOT TO SCALE
OW	OIL WASTE
(P)	PROPOSED
'P'	PLUMBING CONTRACTOR
PD	PRESSURE DROP
RD	ROOF DRAIN
RPM	REVOLUTIONS PER MINUTE
RPZ	REDUCED PRESSURE ZONE
SAN / S	SANITARY
ST	STORM DRAIN
TEMP	TEMPERATURE
TYP	TYPICAL
TW	TEMPERED WATER (110°F)
TWR	TEMPERED WATER RETURN
V	VENT
VTR	VENT THROUGH ROOF
W	WASTE

GENERAL PLUMBING NOTES

1. PROVIDE ALL MATERIALS AND EQUIPMENT AND PERFORM ALL LABOR REQUIRED TO INSTALL COMPLETE AND OPERABLE PLUMBING SYSTEMS AS INDICATED ON THE DRAWINGS, AS SPECIFIED AND AS REQUIRED BY CODE.
2. THE CONTRACTOR, BY PRESENTING THEIR BID FOR THE WORK, REPRESENTS THAT HE/SHE HAS INSPECTED THE SITE AND IS COMPLETELY FAMILIAR WITH THE SCOPE OF WORK AND ALL FIELD CONDITIONS RELATED TO, AND AFFECTING THE WORK AND ITS PERFORMANCE. EXCEPTIONS AFFECTING THE WORK AND ITS PERFORMANCE, OR CONFLICTS BETWEEN FIELD CONDITIONS, SHALL BE BROUGHT TO THE ATTENTION OF THE ARCHITECT PRIOR TO THE SUBMISSION OF BIDS.
3. PERFORM ALL WORK IN ACCORDANCE WITH THE 2020 NEW YORK STATE PLUMBING (NYSPC), FIRE (NYSFC), MECHANICAL (NYSMC), ENERGY CONSERVATION CONSTRUCTION (NYSECC), AND FUEL GAS (NYSFGC) CODE AND THE REQUIREMENTS OF THE LOCAL AUTHORITIES HAVING JURISDICTION.
4. COMPLY WITH THE NATIONAL ELECTRIC CODE AND THE REQUIREMENTS OF DIVISION 26 FOR ALL ELECTRICAL INSTALLATIONS.
5. APPLY FOR AND SECURE ALL REQUIRED PERMITS AND INSPECTIONS AND PAY ALL COSTS FOR THE SAME.
6. FIRE STOP ALL OPENINGS IN FIRE RATED CONSTRUCTION FOR PIPING, CONDUIT, ETC.
7. DO NOT SCALE DRAWINGS. DRAWINGS FOR PLUMBING WORK ARE DIAGRAMMATIC AND ARE INTENDED TO CONVEY SCOPE AND GENERAL ARRANGEMENT ONLY. THE LOCATIONS OF ALL ITEMS SHOWN ON THE DRAWINGS OR CALLED FOR IN THE SPECIFICATIONS THAT ARE NOT DEFINITELY FIXED BY DIMENSIONS ARE APPROXIMATE.
8. COORDINATE CONTRACT DOCUMENTS PROJECT REQUIREMENTS, WORK OF OTHERS, AND EQUIPMENT AND MATERIALS PURCHASED WITH FIELD DIMENSIONS, MANUFACTURERS REQUIREMENTS FOR INSTALLATION, OPERATION, AND MAINTENANCE, CONTRACTORS INTENDED MEANS AND METHODS OF INSTALLATION AND CONTRACTORS FABRICATED ITEMS TO ENSURE A PROPER "FIT" AND INSTALLATION. BRING ANY CONFLICTS TO THE ATTENTION OF THE ARCHITECT/ENGINEER DURING THE SUBMITTAL PHASE FOR RESOLUTION PRIOR TO PURCHASING ANY EQUIPMENT.
9. MAINTAIN MAXIMUM HEADROOM AND SPACE CONDITIONS AT ALL POINTS. WHERE HEADROOM AND SPACE CONDITIONS APPEAR INADEQUATE, NOTIFY THE ARCHITECT/ENGINEER PRIOR TO PROCEEDING WITH INSTALLATION. MAINTAIN A MINIMUM OF 6'-8" CLEARANCE FROM FINISHED FLOOR TO UNDERSIDE OF PIPES, CONDUITS, SUSPENDED EQUIPMENT, ETC., THROUGHOUT ACCESS ROUTES IN MECHANICAL ROOMS.
10. FIELD VERIFY AND COORDINATE ALL PIPING DIMENSIONS BEFORE FABRICATION. MAKE MODIFICATIONS IN THE LAYOUT AS NEEDED TO PREVENT CONFLICT WITH WORK OF OTHER TRADES OR FOR PROPER EXECUTION OF THE WORK. OBTAIN THE APPROVAL OF THE ARCHITECT/ENGINEER FOR MODIFICATIONS.
11. PROVIDE PRODUCTS OF ONE MANUFACTURER WHERE TWO OR MORE ITEMS OF THE SAME TYPE OF MATERIAL OR EQUIPMENT IS REQUIRED.
12. INSTALL ALL EQUIPMENT AND APPURTENANCES IN ACCORDANCE WITH MANUFACTURER'S RECOMMENDATIONS, CONTRACT DOCUMENTS, AND APPLICABLE CODES AND REGULATIONS. REFER TO DETAILS FOR ADDITIONAL PIPING AND EQUIPMENT INSTALLATION REQUIREMENTS.
13. LOCATE ALL TEMPERATURE, PRESSURE, AND FLOW MEASURING DEVICES IN ACCESSIBLE LOCATIONS WITH STRAIGHT SECTION OF PIPE UP- AND DOWNSTREAM AS RECOMMENDED BY THE MANUFACTURER TO ENSURE MANUFACTURER CERTIFIED ACCURACY.
14. COORDINATE ALL EQUIPMENT CONNECTIONS WITH MANUFACTURER'S CERTIFIED DRAWINGS. COORDINATE AND PROVIDE ALL PIPING TRANSITIONS REQUIRED FOR FINAL CONNECTIONS TO EQUIPMENT.
15. COORDINATE LOCATIONS AND SIZES OF ALL FLOOR, WALL, AND ROOF OPENINGS WITH ALL OTHER TRADES. COORDINATE ALL PIPING AND EQUIPMENT SUPPORTED FROM STRUCTURE WITH GENERAL CONSTRUCTION WORK.
16. COMPLETE ALL PRESSURE TESTS BEFORE ANY PLUMBING EQUIPMENT, OR PIPING INSULATION IS APPLIED.
17. MAKE ALL ATTACHMENTS TO JOISTS, TRUSSES, OR JOIST GIRDERS AT PANEL POINTS. PROVIDE BEAM CLAMPS MEETING MSS STANDARDS. THE USE OF C-CLAMPS IS NOT PERMITTED.
18. PROVIDE CONCRETE PADS A MINIMUM OF 4 INCHES HIGH FOR ALL FLOOR MOUNTED EQUIPMENT. EXTEND PAD 4 INCHES BEYOND THE EQUIPMENT ON ALL SIDES.
19. INSTALL PIPING, AND CONDUIT CONCEALED IN AREAS HAVING HUNG CEILINGS AND/OR FURRED SPACES UNLESS OTHERWISE INDICATED ON THE DRAWINGS.
20. REFER TO ARCHITECTURAL DRAWINGS FOR EXACT LOCATION OF ALL ACCESSIBLE FIXTURES. MOUNT ALL SUCH FIXTURES IN ACCORDANCE WITH THE REQUIREMENTS OF THE AUTHORITY HAVING JURISDICTION.
21. PROVIDE ACCESS DOORS IN WALLS, PARTITIONS, AND CEILINGS AS REQUIRED TO MAKE VALVES, WATER HAMMER ARRESTERS, ETC. READILY ACCESSIBLE.
22. ARRANGE FOR, COORDINATE, AND MAKE CONNECTION TO ALL SERVICES PROVIDED BY OTHERS. CONFORM TO ALL REQUIREMENTS APPLICABLE TO CONNECTIONS IMPOSED BY UTILITY COMPANIES AND AUTHORITIES HAVING JURISDICTION.
23. INSTALL FIXTURES AND EQUIPMENT WITH VALVES, UNIONS, ETC. TO ALLOW FOR EASE OF SERVICE AND/OR REMOVAL.
24. CORE DRILL ALL PENETRATIONS THROUGH CONCRETE FLOORS, WALLS, AND FOOTINGS.
25. INSTALL LINK SEAL TYPE PROTECTION FOR WATER RESISTANT SEALS AT ALL SLAB AND BELOW GROUND WALL FOOTING PENETRATIONS.
26. PROVIDE A CLEANOUT AT THE BASE OF WASTE AND VENT STACKS WITH FINISHED WALL PLATE IN FINISHED WALLS.
27. FURNISH AND INSTALL WATER PRESSURE REDUCING VALVE AND PRESSURE RELIEF VALVE IN ACCORDANCE WITH THE NEW YORK STATE PLUMBING CODE ON ALL INCOMING DOMESTIC WATER SYSTEMS IN EXCESS OF 80 P.S.I.G.
28. COVER ALL COPPER PIPING BELOW SLAB WITH "ARMAFLEX" TYPE INSULATION.
29. SLOPE ALL VENT PIPING TO DRAIN BACK TO THE DRAINAGE SYSTEM.
30. FLUSH AND DISINFECT ALL DOMESTIC POTABLE WATER PIPING AND TEST THE WATER IN ACCORDANCE WITH THE INTERNATIONAL PLUMBING CODE. PROVIDE CERTIFICATE OF PERFORMANCE AND LABORATORY TEST REPORT TO LOCAL AUTHORITIES HAVING JURISDICTION AND OBTAIN THEIR APPROVAL.
31. PROVIDE WATER HAMMER ARRESTORS AT ALL QUICK CLOSING FIXTURE VALVE LOCATIONS.
32. ALL PIPING, VALVES AND FITTINGS USED FOR POTABLE WATER SHALL BE NSF 61/372 COMPLIANT AND BE TESTED FOR LOW LEAD.
33. ANY PENETRATIONS THROUGH AIR BARRIER SHALL BE SEALED AS PER 2020 NYSECC RESIDENTIAL AND COMMERCIAL PROVISIONS .
34. ALL PIPING IN PLENUM SPACES SHALL BE CAST IRON FOR SANITARY, STORM, VENT SYSTEMS, AND COPPER PIPING FOR DOMESTIC SYSTEMS, AND STEEL PIPING FOR GAS SYSTEMS. NO PLASTIC PIPING ALLOWED.
35. HOT WATER TEMPERATURE FOR ALL PUBLIC HAND WASHING FIXTURES SHALL BE TEMPERED TO A MAXIMUM TEMPERATURE OF 110 DEGREES F.
36. ALL FIXTURES SHALL MEET THE WATER CONSERVATION REQUIREMENTS LISTED IN THE TABLE 604.4 OF THE 2020 INTERNATIONAL PLUMBING CODE.
37. ALL FIXTURES THAT HAS THE ABILITY TO HAVE A HOSE CONNECTED TO IT, OR DIRECT CONNECTED FIXTURES, SHALL HAVE A BACKFLOW PREVENTION DEVICE ON THE FAUCET, VACUUM BREAKER (ASSE 1052 AND ASME A112.21.3).
38. ALL SANITARY FITTINGS SHALL BE 'WYE' TYPE AND SHALL FOLLOW THE DIRECTION OF FLOW.
39. IN THE EVENT THAT THERE IS A DISCREPANCY BETWEEN DESIGN PLANS, RISER DIAGRAMS, AND/OR SPECIFICATIONS CONCERNING PIPE SIZES, FIXTURES, AND/OR EQUIPMENT, THE MOST STRINGENT REQUIREMENTS SHALL BE APPLIED TO THE PROJECT.

FUEL GAS NOTES

1. PERFORM ALL WORK IN ACCORDANCE WITH NFPA 54 - NATIONAL FUEL GAS CODE, THE 2020 NEW YORK STATE FUEL GAS CODE (NYSFGC), 2021 CENTRAL HUDSON RED BOOK, AND THE REQUIREMENTS OF THE LOCAL AUTHORITIES HAVING JURISDICTION.
2. THE DEPTH OF COVER FOR ALL GAS SERVICE PIPING SHALL BE 24 INCHES.
3. THE WATER SERVICE SHALL BE KEPT A MINIMUM OF 10-FEET FROM THE INCOMING GAS SERVICE MEASURED IN ANY DIRECTION.
4. IF ELECTRIC AND GAS SHARE A COMMON TRENCH, THE TRENCH MUST BE WIDE ENOUGH TO MAINTAIN A 6-INCH MINIMUM SEPARATION DISTANCE.
5. LOCATION OF PROPOSED GAS METER ON CONTRACT DOCUMENTS ARE SUBJECT TO CHANGE BY THE LOCAL UTILITY COMPANY.
6. REFER TO THE LOCAL UTILITY COMPANY HANDBOOKS FOR METER RIG CONSTRUCTION DETAILS, RULES AND REGULATIONS. THIS INCLUDES, BUT NOT LIMITED TO LOCATION OF STEP DOWN REGULATORS, METER SIZE AND SET LENGTHS, VENTING OF REGULATORS, BYPASS PIPING, BOLLARD REQUIREMENTS, CONCRETE PAD, SUPPORTS, AND SHUT OFF VALVES.
7. GAS PIPING:
   - 7.1. INDOOR - STEEL PIPE- SCHEDULE 40 WITH WELDED OR THREADED JOINTS. THREADED JOINTS SHALL BE 150 POUND MALLEABLE IRON, FORGED STEEL, BLACK IRON, OR GALVANIZED STEEL.
   - 7.2. OUTDOOR - ABOVE GROUND - GALVANIZED PIPE OR PROPERLY COATED BLACK STEEL PIPE WITH SCREWED OR THREADED JOINTS.
   - 7.3. BELOW GRADE - STEEL PIPE- MILL WRAPPED SCHEDULE 40 WITH WELDED OR THREADED JOINTS
   - 7.4. WELDED JOINTS MUST BE USED FOR GAS PIPING LARGER THAN 4-INCH, OR 3-INCH FOR SCHOOLS.
8. GAS PIPING ENTERING A BUILDING SHALL BE ABOVE GRADE. PENETRATIONS THROUGH BURIED WALLS ARE NOT PERMITTED.
9. WHERE GAS PIPING IS INSTALLED BELOW GRADE INSIDE A BUILDING, THE GAS PIPING MUST BE INSTALLED IN A CONDUIT AND BE VENTED TO THE EXTERIOR.
10. GAS PRESSURE TEST:
    - 10.1. GALVANIZED OR BARE STEEL - UP TO 14" W.C. - AIR AT 3 PSIG FOR 30 MINUTES
    - 10.2. GALVANIZED OR BARE STEEL - GREATER THAN 14" W.C. - AIR AT 50 PSIG FOR 30 MINUTES
    - 10.3. COATED OR WRAPPED - LESS THAN 2-INCH - AIR AT 90 PSIG FOR 1-HOUR
    - 10.3. COATED OR WRAPPED - 2-INCH TO 12-INCH - AIR AT 90 PSIG FOR 4-HOURS
11. SUPPLY ALL GAS-FIRED EQUIPMENT WITH GAS PIPING AS PER THE NEW YORK STATE FUEL GAS CODE. PROVIDE EACH PIECE OF EQUIPMENT WITH A DIRT LEG, UNION AND GAS COCK. PROVIDE A VENTED REGULATOR IF EQUIPMENT REQUIRES LOWER THAN LINE GAS PRESSURE.
12. PROVIDE VEHICLE IMPACT PROTECTION FOR NEW METER HEADER. BOLLARDS SHALL BE SPACED NO MORE THAN 4-FEET BETWEEN POSTS ON CENTER AND LOCATED NOT LESS THAN 3-FEET FROM THE PROTECTED OBJECT.
13. SHUTOFF VALVES INSTALLED IN TUBING SYSTEMS MUST BE RIGIDLY AND SECURELY SUPPORTED INDEPENDENTLY OF THE TUBING.
14. ALL COOKING APPLIANCE CONNECTIONS MUST BE LISTED AND LABELED.

MANUAL GAS VALVE STANDARDS

VALVE STANDARDS	APPLIANCE SHUTOFF VALVE APPLICATION UP TO 1/2 PSIG PRESSURE	OTHER VALVE APPLICATIONS		
		UP TO 1/2 PSIG PRESSURE	UP TO 2 PSIG PRESSURE	UP TO 5 PSIG PRESSURE
ANSI Z21.15/CGA9.1	X	–	–	–
ASME B16.44	X	X*	X**	–
ASME B16.33	X	X	X	X

NOTES:
1. FOR SI: 1 POUND PER SQUARE INCH GAUGE = 6.895 kPa.
2. X* IF LABELED 2G
3. X** IF LABELED 5G

ENERGY NOTES

2020 NEW YORK STATE ENERGY CONSERVATION CODE NOTES: STATEMENT OF COMPLIANCE:

TO THE BEST OF MY KNOWLEDGE, AND PERSONAL JUDGEMENT, THESE PLANS AND SPECIFICATIONS ARE IN COMPLIANCE WITH THE 2020 NEW YORK STATE ENERGY CONSERVATION CODE (NYSECC).

1. SERVICE WATER HEATING EQUIPMENT PERFORMANCE EFFICIENCY:
   - 1.1. WATER HEATING EQUIPMENT AND HOT WATER STORAGE TANKS SHALL MEET THE REQUIREMENTS OF TABLE C404.2 IN THE 2020 NYSECC. (NYSECC C404.2)
   - 1.2. SERVICE WATER HEATING SHALL BE COMMISSIONED AND COMPLETED IN ACCORDANCE WITH SECTION C408.2 OF THE 2020 NYSECC.
2. TEMPERATURE CONTROL:
   - 2.1. SERVICE WATER HEATING EQUIPMENT SHALL BE PROVIDED WITH CONTROLS ALLOWING A SETPOINT OF 110°F FOR DWELLING UNITS AND 90 °F FOR OTHER OCCUPANCIES. PUBLIC REST ROOM LAVATORIES SHALL HAVE A MAXIMUM OUTLET TEMPERATURE OF 110°F.
   - 2.2. WHERE WATER HEATING EQUIPMENT SERVING NONCIRCULATING SYSTEMS IS NOT SUPPLIED WITH INTEGRAL HEAT TRAPS, HEAT TRAPS SHALL BE PROVIDED ON THE SUPPLY AND DISCHARGE PIPING. (NYSECC C404.3)
3. PIPE INSULATION:
   - 3.1. AUTOMATIC CIRCULATING HOT WATER SYSTEM PIPING SHALL BE INSULATED WITH 1 INCH OF INSULATION WITH A CONDUCTIVITY NOT EXCEEDING 0.27 BTU PER INCH/H X FT X FT X °F, OR THE INSULATION REQUIREMENTS OF SPECIFICATIONS, WHICHEVER IS GREATER. THE FIRST 8 FT OF PIPING IN NONCIRCULATING SYSTEMS WITH EQUIPMENT WITHOUT INTEGRAL HEAT TRAPS SHALL BE INSULATED WITH 0.5 INCH OF MATERIAL HAVING A CONDUCTIVITY NOT EXCEEDING 0.27 BTU PER INCH/H X FT X FT X °F, OR THE INSULATION REQUIREMENTS OF SPECIFICATIONS, WHICHEVER IS GREATER. (NYSECC C404.5)
   - 3.2. ALL PIPING TO BE INSULATED WITH 0.21-0.28 CONDUCTIVITY
   - 3.3. COLD WATER PIPING - ALL SIZES - 1-INCH INSULATION, A.S. JACKET.
   - 3.4. STORM DRAINAGE PIPING ALL HORIZONTAL RUNS AND DRAIN BODY - MINIMUM 1-INCH INSULATION, A.S. JACKET.
   - 3.5. HOT WATER PIPING (140°F) AND TEMPERED WATER PIPING (110°F)
     - 3.5.1. PIPE SIZE: < 1" INSULATION: 1"
     - 3.5.2. PIPE SIZE: 1" TO < 1-1/2" INSULATION: 1"
     - 3.5.3. PIPE SIZE: 1-1/2 TO < 4" INSULATION: 1.5"
     - 3.5.4. PIPE SIZE: 4" TO < 8" INSULATION: 1.5"
4. HOT WATER SYSTEM CONTROLS:
   - 4.1. CIRCULATING HOT WATER SYSTEM PUMPS OR HEAT TRACE SHALL BE ARRANGED TO BE TURNED OFF EITHER AUTOMATICALLY OR MANUALLY WHEN THERE IS LIMITED HOT WATER DEMAND. READY ACCESS SHALL BE PROVIDED TO THE OPERATING CONTROLS. (NYSECC C404.6)
5. PIPE VOLUME AND MAXIMUM LENGTHS
   - 5.1. PER SECTION OF C404.5.1 OF THE 2020 NYSECC, ALL MAXIMUM PIPE LENGTHS FROM FIXTURES SHALL COMPLY WITH THE MAXIMUM PIPE LENGTHS ON THE CHART BELOW. CONTRACTOR TO ENSURE HOT WATER RETURN PIPING IS INSTALLED AS PER PLANS AND THAT THESE LENGTHS ARE MAINTAINED.

NOMINAL PIPE SIZE (INCHES)	VOLUME (LIQUID OUNCES PER FOOT LENGTH)	MAXIMUM PIPING LENGTH (FEET)	
		PUBLIC LAVATORY FAUCETS	OTHER FIXTURES AND APPLIANCES
1/4"	0.33	6	50
5/16"	0.5	4	50
3/8"	0.75	3	50
1/2"	1.5	2	43
5/8"	2	1	32
3/4"	3	0.5	21
7/8"	4	0.5	16
1"	5	0.5	13
1-1/4"	8	0.5	8
1-1/2"	11	0.5	6
2" OR LARGER	18	0.5	4

APPLICABLE CODES

- 2020 NEW YORK STATE RESIDENTIAL CODE (NYSRC) 1ST PRINTING (INCLUDES PLUMBING, MECHANICAL, FUEL GAS, AND ENERGY CONSERVATION)
- 2020 NEW YORK STATE BUILDING CODE (NYSBC) 1ST PRINTING
- 2020 NEW YORK STATE FIRE CODE (NYSFC) 1ST PRINTING
- 2020 NEW YORK STATE PLUMBING CODE (NYSPC) 1ST PRINTING
- 2020 NEW YORK STATE FUEL GAS CODE (NYSFGC) 1ST PRINTING
- 2020 NEW YORK STATE MECHANICAL CODE (NYSMC) 1ST PRINTING
- 2020 NEW YORK STATE ENERGY CONSERVATION CODE (NYSECC) 1ST PRINTING

H2M architects + engineers

538 Broad Hollow Road, 4th Floor East
Melville, NY 11747
631.756.8000 • www.h2m.com

CONSULTANTS:

MARK	DATE	DESCRIPTION

STATE OF NEW YORK · JONATHAN RICHARD MUNTSCHE · 096440-1 · LICENSED PROFESSIONAL ENGINEER

"ALTERATION OF THIS DOCUMENT EXCEPT BY A LICENSED PROFESSIONAL IS ILLEGAL"

DESIGNED BY:	DRAWN BY:	CHECKED BY:	REVIEWED BY:
JRM	KJE		
PROJECT No: VGFD2001	DATE: JULY 2022	SCALE: AS SHOWN	

CLIENT

VAILS GATE FIRE DISTRICT

New Storage Building (Phase I)
New Fire Station (Phase II)

872 Blooming Grove Turnpike
New Windsor, NY 12553

CONTRACT

CONTRACT G
GENERAL CONSTRUCTION

STATUS

FINAL BID DOCUMENT

SHEET TITLE

PLUMBING NOTES, LEGEND, AND ABBREVIATIONS

DRAWING No.

P2 001.00

C:\Users\kescarraman\Documents\VGFD2001-Central21-P_Kescarraman.rvt
7/18/2022 8:12:22 AM

PLUMBING FIXTURE SCHEDULE

FIXTURE TAG	DESCRIPTION	MANUFACTURER	MODEL	TRIM				MINIMUM CONNECTION SIZES (IN)							SPECIFICATION	REMARKS
				MANUFACTURER	MODEL	TYPE	MOTION SENSOR CONTROL	COLD WATER		HOT WATER		DRAIN		VENT		
								SIZE	FU	SIZE	FU	SIZE	DFU			
LAV-1	LAVATORY - UNDERMOUNT	KOHLER	CAXTON OVAL K-2210	KOHLER	GEOMETRIC INSIGHT K-13466	ELECTRONIC	YES	1/2	.5	1/2	.5	1-1/2	1	1-1/2	VITREOUS CHINA UNDER-MOUNT LAVATORY, FRONT OVERFLOW, MOUNTING KIT AND TEMPLATE BY MANUFACTURER. LAVATORY SHALL ADHERE TO ASME A112.19.2 AND ANSI A117.1. FAUCET TO HAVE MAX. FLOW RATE OF 0.5 GPM, VANDAL RESISTANT AERATOR, AND 24" FLEXIBLE SUPPLY HOSES. MIXING FAUCET SHALL ADHERE TO ASME A112.18.1 AND NSF/ANSI 372.	PROVIDE P-TRAP AND STRAINER.
LAV-2	LAVATORY - WALL HUNG - BARRIER FREE	AMERICAN STANDARD	DECORUM 20" X 18" 9024.001EC	KOHLER	GEOMETRIC INSIGHT K-13466	ELECTRONIC	YES	1/2	.5	1/2	.5	1-1/2	1	1-1/2	20" X 18" VITREOUS CHINA LAVATORY WITH REAR OVERFLOW. CENTER HOLE ONLY. RECESSED SELF-DRAINING DECK WITH MINIMAL BACKSPLASH. ADA AND TAS COMPLIANT. LAVATORY SHALL ADHERE TO ASME A112.19.2 AND ANSI A117.1. FAUCET TO HAVE MAX. FLOW RATE OF 0.5 GPM, VANDAL RESISTANT AERATOR, AND 24" FLEXIBLE SUPPLY HOSES. MIXING FAUCET SHALL ADHERE TO ASME A112.18.1 AND NSF/ANSI 372.	PROVIDE ZURN Z1231 CONCEALED ARM WALL MOUNTED LAVATORY SUPPORT SYSTEM, P-TRAP, AND STRAINER.
WC-1	WATER CLOSET - FLUSH VALVE - WALL MOUNT	KOHLER	KINGSTON K-4323	KOHLER	TRIPOINT K-10956-SV	MANUAL/ELECTRONIC	YES	1	10	-	-	3	4	2	VITREOUS CHINA, SIPHON JET, ELONGATED BOWL, WALL MOUNTED WITH 1-1/2" REAR SPUD . WATER CLOSET SHALL CONFORM TO ASME A112.19.2 AND ANSI A117.1. FLUSHOMETER SHALL BE FIXTURE MOUNT DESIGN, BRASS CONSTRUCTION, ELECTRONIC INFRARED SENSOR, AND DC STYLE WITH 1.5V AA BATTERIES.	PROVIDE ZURN Z1202 NO-HUB WATER CLOSET CARRIER SYSTEM FOR WATER CLOSETS AND P-TRAP.
WC-2	WATER CLOSET - FLUSH VALVE - WALL MOUNT - BARRIER FREE	KOHLER	KINGSTON K-4323	KOHLER	TRIPOINT K-10956-SV	MANUAL/ELECTRONIC	YES	1	10	-	-	3	4	2	VITREOUS CHINA, SIPHON JET, ELONGATED BOWL, WALL MOUNTED WITH 1-1/2" REAR SPUD . WATER CLOSET SHALL CONFORM TO ASME A112.19.2 AND ANSI A117.1. FLUSHOMETER SHALL BE FIXTURE MOUNT DESIGN, BRASS CONSTRUCTION, ELECTRONIC INFRARED SENSOR, AND DC STYLE WITH 1.5V AA BATTERIES.	PROVIDE ZURN Z1202 NO-HUB WATER CLOSET CARRIER SYSTEM FOR WATER CLOSETS AND P-TRAP.
UR-1	URINAL - FLUSH VALVE - WALL MOUNTED - BARRIER FREE	KOHLER	BARDON K-4991-ER	KOHLER	TRIPOINT K-10949-SV	MANUAL/ELECTRONIC	YES	3/4	5	-	-	2	2	2	VITREOUS CHINA WASHOUT URINAL, 3/4" REAR SPUD, 14" EXTENDED RIM, CONFORMS TO ASME A112.19.2, ANSI A117.1. FLUSHOMETER SHALL BE FIXTURE MOUNT DESIGN, BRASS CONSTRUCTION, ELECTRONIC INFRARED SENSOR, AND DC STYLE WITH 1.5V AA BATTERIES.	PROVIDE ZURN Z1222 URINAL CARRIER SYSTEM FOR WATER CLOSETS AND P-TRAP.
SH-1	SHOWER - VOLUME CONTROL WITH MIXING VALVE AND SHOWER DRAIN	SWAN	STF-3838 SWANSTONE	SYMMONS	TEMPTROL S-96-1-231-X-B	MANUAL	NO	1/2	3	1/2	3	1-1/2	2	1-1/2	38" X 38" COMPRESSION MOLDED SOLID SURFACE SHOWER PAN. 3/4" LOW THRESHOLD ENTRY, WALL-TO-WALL TRENCH DRAIN SYSTEM WITH 304 STAINLESS STEEL GRATE. SLIP-RESISTANT, TEXTURED BOTTOM SURFACE. SHOWER VALVE TO HAVE PRESSURE BALANCING MIXING VALVE WITH INTEGRAL VOLUME CONTROL, ADJUSTABLE STOP SCREW TO LIMIT HANDLE TURN, SHOWER HEAD WITH ARM AND FLANGE, INTEGRAL SERVICE STOPS, AND CHROME BRASS ESCUTCHEON ON VALVE.	PROVIDE P-TRAP, STRAINER, AND DRAIN
SH-2	SHOWER - HANDHELD TRIM WITH MIXING VALVE AND SHOWER DRAIN - BARRIER FREE - ADA	SWAN	STF-3838 SWANSTONE	SYMMONS	TEMPTROL S-96-300-B30-L-V	MANUAL	NO	1/2	3	1/2	3	1-1/2	2	1-1/2	38" X 38" COMPRESSION MOLDED SOLID SURFACE SHOWER PAN. 3/4" LOW THRESHOLD ENTRY, WALL-TO-WALL TRENCH DRAIN SYSTEM WITH 304 STAINLESS STEEL GRATE. SLIP-RESISTANT, TEXTURED BOTTOM SURFACE. SHOWER VALVE TO HAVE HAND SHOWER SYSTEM WITH LEVER HANDLES, PRESSURE BALANCING MIXING VALVE WITH INTEGRAL DIVERTER AND ADJUSTABLE STOP SCREW TO LIMIT HANDLE TURN, 5 FOOT FLEXIBLE METAL HOSE WITH IN-LINE VACUUM BREAKER, WALL CONNECTION AND FLANGE, 30 INCH SLIDE BAR FOR HAND SHOWER MOUNTING, POLISHED CHROME FINISH.	PROVIDE P-TRAP, STRAINER, AND DRAIN
LS-1	LAUNDRY SINK - DROP IN	ADVANCE TABCO	DI-1-2012	ADVANCE TABCO	K-50	MANUAL	NO	1/2	2.25	1/2	2.25	1-1/2	2	1-1/2	23" X 21" X 12", 18 GAUGE, ONE PIECE SEAMLESS SINK BOWL. SELF RIMMING DESIGN WITH MOUNTING CLIPS. FAUCET SHALL BE DECK MOUNTED 8" SWING SPOUT, 4" O.C., LEAD FREE.	PROVIDE ADDITIONAL ADVANCE TABCO DTA-53 SPLASH MOUNT PRERINSE FAUCET NEXT TO SINK. SEE ARCHITECTURAL SHEETS FOR MORE INFO. PROVIDE SEDIMENT/LINT P-TRAP.
SK-1	PREP SINK - UNDER MOUNT	ADVANCE TABCO	1620A-12	ADVANCE TABCO	K-132	MANUAL	NO	1/2	1	1/2	1	1-1/2	2	1-1/2	ONE PIECE 16" X 20" X 12" SEAMLESS STAINLESS STEEL BOWL. 18 GAUGE TYPE 304 STAINLESS STEEL. FAUCET SHALL BE DECK MOUNTED 5-1/2" GOOSENECK SPOUT, 8" O.C., BRASS CHROME PLATED BODY AND SPOUT, CHROME PLATED HANDLES, AND LEAD FREE.	PROVIDE P-TRAP, STRAINER, AND DRAIN
SK-2	HAND SINK - UNDER MOUNT	ADVANCE TABCO	1620A-10	ADVANCE TABCO	K-132	MANUAL	NO	1/2	1	1/2	1	1-1/2	2	1-1/2	ONE PIECE 16" X 20" X 12" SEAMLESS STAINLESS STEEL BOWL. 18 GAUGE TYPE 304 STAINLESS STEEL. FAUCET SHALL BE DECK MOUNTED 5-1/2" GOOSENECK SPOUT, 8" O.C., BRASS CHROME PLATED BODY AND SPOUT, CHROME PLATED HANDLES, AND LEAD FREE.	PROVIDE P-TRAP, STRAINER, AND DRAIN
SK-3	TWO-COMPARTMENT SINK - KITCHEN	ADVANCE TABCO	FC-2-2424-18RL	ADVANCE TABCO	K-101	MANUAL	NO	1/2	1	1/2	1	1-1/2	2	1-1/2	16 GAUGE 304 STAINLESS STEEL TWO BASIN SINK WITH ADJUSTABLE HEIGHT, STAINLESS STEEL LEGS, ADJUSTABLE FRONT TO BACK CROSS BRACING, ROLLED RIM EDGE, 8" O.C. FAUCET HOLES. (2) DRAIN BOARDS. FAUCET SHALL BE SPLASH MOUNTED 8" SPOUT, 8" O.C., CHROME PLATED HANDLES, AND LEAD FREE.	PROVIDE ADDITIONAL ADVANCE TABCO DTA-53 SPLASH MOUNT PRERINSE FAUCET. SEE ARCHITECTURAL SHEETS FOR MORE INFO.
DF-1	DRINKING FOUNTAIN - SURFACE MOUNT- BILEVEL - ADA - REFRIGERATED	ELKAY	VRCHDTL8SC	-	-	MANUAL	NO	1/2	0.25	-	-	1-1/4"	1/2	1-1/2	ELKAY WALL MOUNT HEAVY DUTY VANDAL RESISTANT BI-LEVEL ADA COOLER NON-FILTERED REFRIGERATED STAINLESS. FEATURES SHALL INCLUDE HEAVY DUTY VANDAL RESISTANT. FURNISHED WITH VANDAL RESISTANT BUBBLER. MECHANICAL FRONT BUTTON ACTIVATION. UNIT SHALL BE CERTIFIED TO UL 399 AND CSA C22.2 NO 120. LEAD FREE DESIGN CERTIFIED TO NSF/ANSI 61 & 372.	
DF-2	DRINKING FOUNTAIN - SURFACE MOUNT - SINGLE - ADA - BOTTLE FILLER - FILTERED - REFRIGERATED	ELKAY	LZS8WSLK	-	-	MANUAL/ELECTRONIC	YES	1/2	0.25	-	-	1-1/4"	1/2	1-1/2	BOTTLE FILLING STATION WITH SINGLE ADA COOLER, FILTERED 8 GPH. FEATURES INCLUDE HANDS FREE, VISUAL FILTER MONITOR, FILTERED, LAMINAR FLOW, ANTI MICROBIAL, DRAIN. ELECTRONIC BOTTLE FILLER SENSOR WITH ELECTRONIC FRONT AND SIDE BUBBLER PUSHBAR ACTIVATION. UNIT SHALL BE CERTIFIED TO UL 399 AND CSA C22.2 NO 120. LEAD FREE DESIGN CERTIFIED TO NSF/ANSI 61 & 372	
EM-1	EMERGENCY EYE/FACE WASH	HAWS	AXION 7360BT -7460BT	-	-	MANUAL	NO	3/4	-	3/4	-	1-1/2	-	-	WALL MOUNTED EYE/FACE WASH SHALL INCLUDE A STAINLESS STEEL 11" ROUND BOWL. AN EYE/FACE WASH HEAD SUPPLIED BY AN INTEGRAL FLOW CONTROL, CHROME-PLATED BRASS STAY-OPEN BALL VALVE EQUIPPED WITH STAINLESS STEEL BALL AND STEM, AND CHROME-PLATED BRASS IN-LINE 50 X 50 MESH WATER STRAINER. UNIT SHALL ALSO INCLUDE CAST-ALUMINUM CHROMATE PROTECTED WALL BRACKET, YELLOW PLASTIC POP-OFF DUST COVER FOR EYEWASH HEAD, TAILPIECE, UNIVERSAL SIGN, 1/2" IPS INLET, AND 1-1/2" IPS WASTE	PROVIDE THERMOSTATIC MIXING VALVE HAWS MODEL 9201EW. OUTLET TEMPERATURE SHALL BE SET TO 85 DEGREES F.
HR-1	GARDEN HOSE REEL	REELCRAFT	GC83050 OLP	-	-	MANUAL	NO	3/4	-	-	-	-	-	-	SPRING RETRACTABLE WATER HOSE REEL. INCLUDES OUTLET HOSE WITH BRASS ON/OFF BALL VALVE, BUMPER, AND INLET HOSE. HOSE END FITTINGS, ADJUSTABLE GUIDE ARM. INDIVIDUALLY POWER-COATED STEEL PARTS.	FINAL LOCATION TO BE PROVIDED BY OWNER
JS-1	JANITOR SINK - FLOOR MOUNTED	ADVANCE TABCO	9-OP-40	ADVANCE TABCO	K-240	MANUAL	NO	3/4	2.25	3/4	2.25	3	2	1-1/2	FLOOR MOUNTED STAINLESS STEEL MOP SINK. 16"X 20"X 12" BOWL SIZE. SERVICE FAUCET SHALL BE WALL MOUNT, 8" OC, 6-1/2" SPOUT, WITH HOSE THREAD OUTLET AND PAIL HOOK, VACUUM BREAKER SPOUT, WALL BRACED, AND CHROME-PLATED BRASS.	INCLUDE HOSE BRACKET, HOSE, MOP HOLDER, AND WALL GUARDS.
HB-1	HOSE BIBB - INTERIOR WITH KEY	MURDOCK	8120-LF	-	-	-	-	3/4	-	-	-	-	-	-	HEAVY BRASS BODY, FURNISHED WITH A LOCKSHIELD BONNET AND REMOVABLE LOOSE KEY HANDLE. VACUUM BREAKERS ARE ATMOSPHERIC TYPE AND CONFORM TO ASSE STANDARD 1011. LEAD FREE.	
HB-2	WALL HYDRANT - FROST FREE	WATTS	HY-420	-	-	-	-	3/4	-	-	-	-	-	-	NON-FREEZE KEY OPERATED WALL HYDRANT WITH CHROME PLATED FACE, INTEGRAL VACUUM BREAKER, ALL BRONZE HEAD, BRONZE WALL CASING, AND LOOSE KEY. COMPLY WITH ASME B1.20.7 AND ASSE 1019-2004	
HB-3	HOSE BIBB - HOT AND COLD	WOODFORD	MODEL 22	-	-	-	-	3/4	-	3/4	-	-	-	-	NON-FREEZE HOT AND COLD FAUCET. SEPERATE HOT AND COLD INLET TUBES TO ALLOW FOR MANUALLY OPERATED TEMPERATURE CONTROL WITH CROSS CONTAMINATION PROTECTION. PRESSURE RELIEF VALVES AND INTEGRAL BACKFLOW PROTECTION DEVICE. ASSE 1019 LISTED AND CSA, UPC APPROVED.	
FD-1	FLOOR DRAIN (CONCRETE FLOORS) - SEE NOTE 3	ZURN	Z415BL	-	-	-	-	-	-	-	-	3	2	2	FLOOR DRAIN, DURA-COATED CAST IRON BODY, COMBINATION INVERTIBLE MEMBRANE CLAMP AND ADJUSTABLE COLLAR W/ SEEPAGE SLOTS AND TYPE BL D.C.C.I., WIDE FLANGED HEAD AND POLISHED NICKEL BRONZE, LIGHT-DUTY STRAINER.	
TD-1	TRENCH DRAIN (APPARATUS BAY)	WATTS	DEAD LEVEL D	-	-	-	-	-	-	-	-	4	-	2	PRE-SLOPED TRENCH DRAIN SYSTEM WITH DUCTILE IRON FRAME, UV STABILIZED TALC-FILLED POLYPROPYLENE CHANNELS WITH INTEGRAL 4" NO HUB BOTTOM OR END OUTLETS. SYSTEM SHALL BE FRAME-ANCHORED, WITH GRATING TO SUIT DIN CLASS LOAD RATING. SYSTEM TO INCLUDE FRAME CONNECTORS, GRATE LOCKDOWNS, AND CONSTRUCTION COVERS.	SEE 'S' DRAWINGS FOR ASSOCIATED SLAB DETAILS
FS-1	FLOOR SINK	ZURN	Z1900	-	-	-	-	-	-	-	-	3	2	2	12" X 12" X 6" DEEP CAST IRON BODY AND SQUARE, LIGHT-DUTY GRATE WITH 1/2" SLOTTED OPENINGS, WHITE ACID RESISTING PORCELAIN ENAMEL INTERIOR AND TOP, COMPLETE WITH WHITE ABS ANTI-SPLASH INTERIOR BOTTOM DOME STRAINER.	
RD-1	ROOF DRAIN - COMBINATION	ZURN	Z165	-	-	-	-	-	-	-	-	SEE PLANS FOR SIZES	-	-	COMBINATION ROOF DRAIN AND OVERFLOW DRAIN, DURA-COATED CAST IRON BODIES WITH COMBINATION MEMBRANE FLASHING CLAMP/GRAVEL GUARDS, DOUBLE DECK PLATE, AND LOW SILHOUETTE CAST IRON DOMES.	
DS-1	EMERGENCY DRAIN DOWNSPOUT	ZURN	Z199	-	-	-	-	-	-	-	-	SEE PLANS FOR SIZES	-	-	DOWNSPOUT NOZZLE. ALL NICKEL BRONZE BODY, DECORATIVE FACE OF WALL FLANGE AND OUTLET NOZZLE.	

NOTES:

1. CHROME PLATE ALL DRAIN PIPE, FITTINGS, P-TRAPS AND SUPPLY LINES THAT ARE EXPOSED, LOCATED WITHIN VANITIES OR ACCESSIBLE CABINETS OR BEHIND WATER CLOSETS.
2. MINIMUM CONNECTION SIZES INDICATED ARE EQUIPMENT CONNECTION SIZES OR CODE MINIMUM SIZES, SEE PLANS AND DIAGRAMS FOR ACTUAL SIZES REQUIRED.
3. ALL FLOOR DRAINS SHALL HAVE TRAP SEALS. MANUFACTURER: ZURN; Z1072.
4. INSULATE EXPOSED DRAIN AND SUPPLY PIPING FOR HANDICAPPED FIXTURES WITH TRUEBRO LAV GUARD.

C:\Users\kescarraman\Documents\VGFD2001-Central21-P_Kescarraman.rvt
7/18/2022 8:12:22 AM

H2M architects + engineers
538 Broad Hollow Road, 4th Floor East
Melville, NY 11747
631.756.8000 • www.h2m.com

CONSULTANTS:

MARK	DATE	DESCRIPTION

STATE OF NEW YORK · JONATHAN RICHARD MURATORE · 096440-1 · LICENSED PROFESSIONAL ENGINEER

"ALTERATION OF THIS DOCUMENT EXCEPT BY A LICENSED PROFESSIONAL IS ILLEGAL"

DESIGNED BY:	DRAWN BY:	CHECKED BY:	REVIEWED BY:
JRM	KJE		

PROJECT No:	DATE:	SCALE:
VGFD2001	JULY 2022	AS SHOWN

CLIENT

VAILS GATE FIRE DISTRICT

New Storage Building (Phase I)
New Fire Station (Phase II)

872 Blooming Grove Turnpike
New Windsor, NY 12553

CONTRACT
CONTRACT G
GENERAL CONSTRUCTION

STATUS
FINAL BID DOCUMENT

SHEET TITLE
PLUMBING FIXTURE SCHEDULE AND SPECIFICATIONS

DRAWING No.
P2 002.00

PUMP SCHEDULE

PUMP NO.	LOCATION	TYPE	SERVICE	GPM (EA)	TDH (FT)	MOTOR DATA					REMARKS
						RPM	HP (EA)	PHASE	CYCLE	VOLTS	
CP-1	MECH ROOM	SIMPLEX	TEMPERED WATER RECIRC	2	5	3250	1/25	1	60	115 V	TACO MODEL: 007-F5. INCLUDE TACO AQUASTAT 563-2 AND 265-3 DIGITAL TIMER.
CP-2	MECH ROOM	SIMPLEX	HOT WATER RECIRC	2	4	3250	1/40	1	60	115 V	TACO MODEL: 006-ST4. INCLUDE TACO AQUASTAT 563-2 AND 265-3 DIGITAL TIMER.
EP-1	ELEVATOR	SIMPLEX SUBMERSIBLE	ELEVATOR PIT	50	20	3450	1/2	1	60	115 V	PACKAGED UNIT ZOELLER 940-0013, OIL SMART

EXPANSION TANKS

EQUIPMENT NO.	LOCATION	SYSTEM SERVED	PERFORMANCE/CONSTRUCTION REQUIREMENTS			EQUIPMENT SPECIFICATIONS				
			SYSTEM DATA							
			ESTIMATED VOLUME (GAL.)	MAX. OPERATING PRESS. RANGE (PSIG)	MAX. OPERATING TEMP. RANGE (DEG. F)	MNF	MODEL NO.	DIMENSION DIA. x H	WATER CONNECTION	OPERATING WEIGHT (LBS.)
ET-1	MECH ROOM	BUILDING	4.4	150	200	AMTROL	ST-12	11" X 15"	3/4"	9

MIXING VALVE STATION

EQUIPMENT NO.	LOCATION	BASIS OF DESIGN INFORMATION					
		MAXIMUM PRESSURE RANGE	MINIMUM FLOW	MAXIMUM FLOW	MANUFACTUER	MODEL	NOMINAL DIMENSIONS (W X H)
MV-1	MECH ROOM	200 PSI	0.25 GPM	32 GPM	LEONARD	PNV-100-LF	8-1/2" X 9"

INTERCEPTORS

EQUIPMENT NO.	LOCATION	BASIS OF DESIGN INFORMATION							REMARKS
		FLUID	FLOW (GPM)	CAPACITY (GAL)	INLET AND OUTLET SIZE	MANUFACTUER	MODEL	NOMINAL DIMENSIONS (L X W X H)	
GT-1	PANTRY	GREASE	35	70	3"	SCHIER	GB2	35" X 23" X 13-3/4"	PROVIDE EXTENSION COLLAR AS REQUIRED DEPENDING ON PIPE INVERTS.
OS-1	APPARATUS BAY	OIL	35	350	4"	HIGHLAND TANK	HTC 350	72" X 42" DIA.	PROVIDE EXTENSION COLLAR AS REQUIRED DEPENDING ON PIPE INVERTS.
LT-1	LAUNDRY ROOM	LINT WASTE	70	45	3"	WATTS	LI-807	25" X 25" X 20"	LINT INTERCEPTOR TO BE PLACED WITHIN CONCRETE PIT. SEE STRUCTURAL PLANS FOR MORE DETAIL.

WATER HEATER [GAS]

EQUIPMENT NO.	LOCATION	SYSTEM SERVED	BASIS OF DESIGN INFORMATION							EQUIPMENT SPECIFICATIONS						MINIMUM PERFORMANCE OF WATER HEATING (NYSECC TABLE C404.2)				REMARKS
			GAS INPUT (BTU)	GAS INLET PRESS. (IN W.C)	EFFICIENCY	RECOVERY GPH AT 100 DEG RISE	WATER CONNECTION	GAS CONNECTION	FLUE SIZE	MNF	MODEL NO.	NOMINAL DIMENSION DIA x H	CAPACITY (GAL)	NOMINAL OPERATING WEIGHT (LBS.)	VOLTS / PHASE	EQUIPMENT TYPE	SIZE CATEGORY	SUBCATEGORY	PERFORMANCE REQUIRED	
WH-1	MECH ROOM	BUILDING	199,000	3.5 - 14	97%	235	1-1/2"	3/4"	3"	AO SMITH	BTH-199	27-3/4" X 76-1/2"	100	523	120/1	STORAGE WATER HEATER, GAS	> 155,000 BTU/H	< 4,000 BTU/H/GAL	80 PERCENT EFFICIENCY	HEATERS TO INCLUDE: CONCENTRIC VENT KIT; ALARM BELL; CONDENSATE NEUTRALIZATION KIT.

H2M architects + engineers

538 Broad Hollow Road, 4th Floor East
Melville, NY 11747
631.756.8000 • www.h2m.com

CONSULTANTS:

MARK	DATE	DESCRIPTION

STATE OF NEW YORK · JONATHAN RICHARD HUNTLEY · 096440-1 · LICENSED PROFESSIONAL ENGINEER

"ALTERATION OF THIS DOCUMENT EXCEPT BY A LICENSED PROFESSIONAL IS ILLEGAL"

DESIGNED BY:	DRAWN BY:	CHECKED BY:	REVIEWED BY:
JRM	KJE		

PROJECT No:	DATE:	SCALE:
VGFD2001	JULY 2022	AS SHOWN

CLIENT

VAILS GATE FIRE DISTRICT

New Storage Building (Phase I)
New Fire Station (Phase II)

872 Blooming Grove Turnpike
New Windsor, NY 12553

CONTRACT

CONTRACT G
GENERAL CONSTRUCTION

STATUS

FINAL BID DOCUMENT

SHEET TITLE

PLUMBING EQUIPMENT SCHEDULE

DRAWING No.

P2 003.00

C:\Users\kescarraman\Documents\VGFD2001-Central21-P_Kescarraman.rvt

7/18/2022 8:12:22 AM

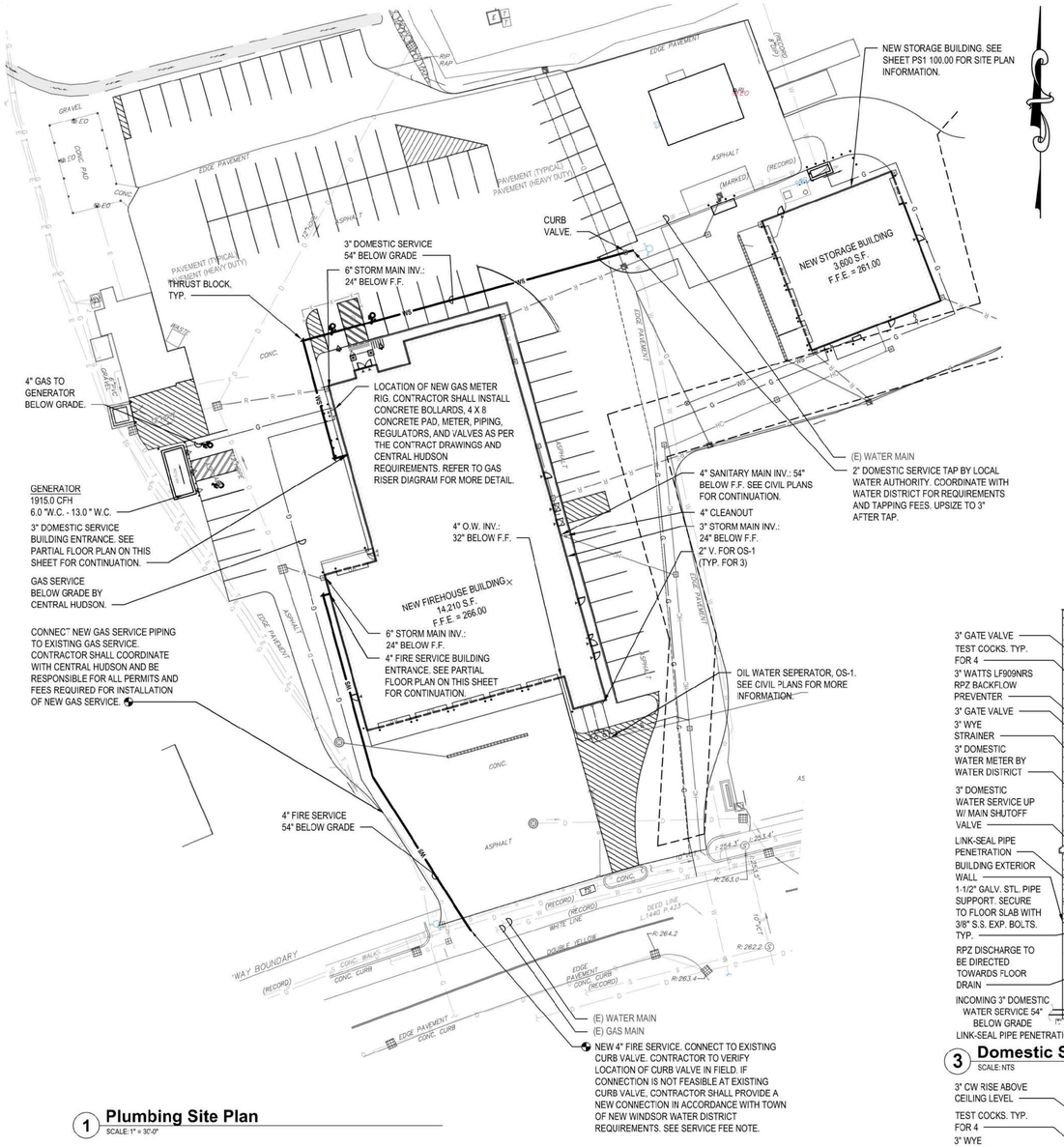

1 **Plumbing Site Plan**
SCALE: 1" = 30'-0"

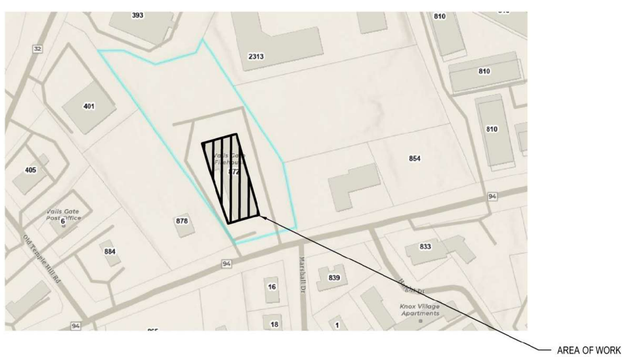

2 **Site Map**
SCALE: NTS

ORANGE COUNTY TAX NUMBER
SECTION: 65 BLOCK: 2 LOT(S): 28

DOMESTIC WATER AND FIRE SERVICE BACKFLOW PREVENTION DEVICE GENERAL NOTES:

1. INSTALLATION SHALL BE IN ACCORDANCE WITH ALL APPLICABLE COUNTY DEPARTMENT OF HEALTH SERVICES, NEW YORK STATE HEALTH DEPARTMENT REGULATIONS, AND TOWN OF NEW WINDSOR WATER DISTRICT REQUIREMENTS.
2. ALL CONNECTIONS ON THE WATER SERVICE SHALL BE DOWNSTREAM FROM THE BACKFLOW PREVENTION DEVICE. BYPASSING OF A BACKFLOW PREVENTION DEVICE IS A VIOLATION OF NEW YORK STATE HEALTH DEPARTMENT RULES AND REGULATIONS.
3. THE CONTRACTOR SHALL ENGAGE A CERTIFIED BACKFLOW PREVENTION DEVICE TESTER TO TEST THE BACKFLOW PREVENTION DEVICE AFTER INSTALLATION. IT IS THE OWNER'S RESPONSIBILITY TO HAVE EACH DEVICE CERTIFIED AT LEAST ANNUALLY WITH RESULTS REPORTED TO THE NEW WINDSOR WATER DISTRICT AND TO THE COUNTY DEPARTMENT OF HEALTH ON NY STATE FORM GEN 215. CONTRACTOR SHALL BE RESPONSIBLE FOR ALL RELATED TESTING AND APPLICATION FEES.
4. SHUT-OFF VALVES ON DOMESTIC WATER SERVICE BFP DEVICE SHALL BE NRS GATE VALVES AND SHALL BE SAME MANUFACTURER AS BFP DEVICE.
5. SHUT-OFF VALVES ON FIRE SERVICE BFP DEVICE SHALL BE INDICATING TYPE AND SHALL BE SAME MANUFACTURER AS BFF DEVICE.
6. TEST COCKS ON THE BFP DEVICE SHALL BE POSITIONED TO FACILITATE TESTING WITH 30" MINIMUM CLEARANCE.
7. BACKFLOW DEVICES MAY NOT BE MODIFIED IN ANY WAY DURING INSTALLATION.
8. DOMESTIC WATER AND FIRE SERVICE LINE TO BE CLASS 52 DUCTILE IRON AND SHALL HAVE A MINIMUM OF 4'-6" OF COVER.
9. PIPING SHALL BE UN-BRANCHED AND UNRESTRICTED FROM THE SUPPLY MAIN TO THE DEVICE, EXCEPT FOR THE METER ON THE DOMESTIC SERVICE.
10. CONTRACTOR SHALL PROVIDE APPROPRIATE FLOOR/WALL SUPPORTS FOR ALL DEVICES AND PIPING. ALL SUPPORTS/HANGERS/CLAMPS SHALL BE GALVANIZED STEEL.
11. BACKFLOW DEVICES SHALL BE APPROVED BY THE UNIVERSITY OF SOUTHERN CALIFORNIA FOUNDATION FOR CROSS CONNECTION CONTROL AND HYDRAULIC RESEARCH.
12. THE ROOM AND ENCLOSURE WHERE THE DEVICES ARE LOCATED SHALL BE HEATED AND SHALL HAVE LIGHTING.
13. DEVICE MAY NOT BE INSTALLED HIGHER THAN 5'-0" ABOVE THE FLOOR OR A FIXED PLATFORM IS REQUIRED.
14. NO ADDITIONAL PRIVATE FIRE HYDRANTS TO BE INSTALLED.
15. WATER SERVICE LINES TO MAINTAIN A MINIMUM CLEARANCE OF 10'-0" FROM GAS SERVICE, SEWER LINES, DRAINAGE LINES, UTILITY POLES AND TREES, ETC. WATER SERVICE LINES TO MAINTAIN A MINIMUM CLEARANCE OF 5' 0" FROM ELECTRICAL SERVICE LINES.
16. BACKFLOW PREVENTION DEVICES TO HAVE A MINIMUM OF 30" CLEARANCE FROM ANY OBSTRUCTION.

SERVICE FEE NOTE:

CONTRACTOR SHALL BE RESPONSIBLE FOR ALL ASSOCIATED TAP, PERMIT AND METER FEES FOR WATER AND GAS SERVICES. CONTRACTOR SHALL PROVIDE A 20,000 DOLLAR ALLOWANCE TO COVER ALL FEES ASSOCIATED WITH CONNECTING NEW WATER AND GAS SERVICES TO EXISTING MAINS, AND INSTALLATION AND FURNISHING OF UTILITY METERS AND METER RIGS.

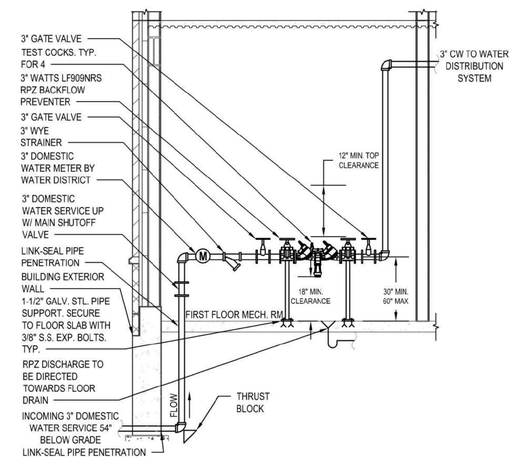

3 **Domestic Service BFP Device Section View Detail**
SCALE: NTS

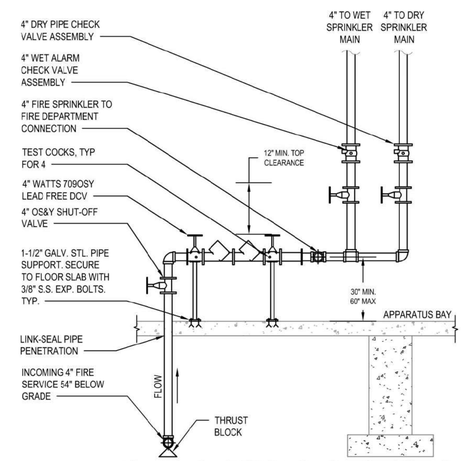

5 **Fire Service BFP Device Section View Detail**
SCALE: NTS

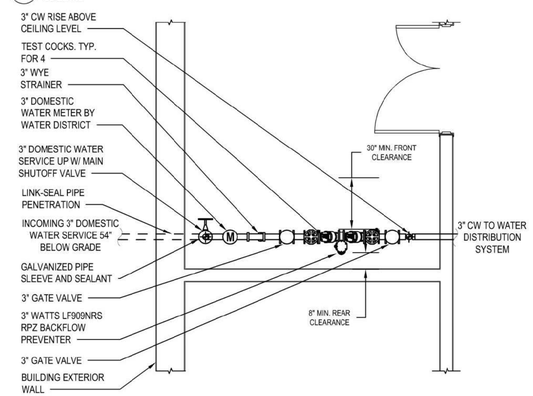

4 **Domestic Service BFP Device Plan View Detail**
SCALE: NTS

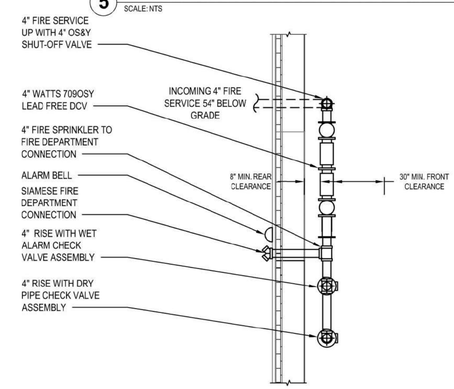

6 **Fire Service BFP Device Plan View Detail**
SCALE: NTS

H2M architects + engineers
538 Broad Hollow Road, 4th Floor East
Melville, NY 11747
631.756.8000 • www.h2m.com

CONSULTANTS:

MARK	DATE	DESCRIPTION

STATE OF NEW YORK · JONATHAN RICHARD HUNT STRUBE · 096440-1 · LICENSED PROFESSIONAL ENGINEER

"ALTERATION OF THIS DOCUMENT EXCEPT BY A LICENSED PROFESSIONAL IS ILLEGAL"

DESIGNED BY:	DRAWN BY:	CHECKED BY:	REVIEWED BY:
JRM	KJE		

PROJECT No.:	DATE:	SCALE:
VGFD2001	JULY 2022	AS SHOWN

CLIENT
VAILS GATE FIRE DISTRICT

New Storage Building (Phase I)
New Fire Station (Phase II)

872 Blooming Grove Turnpike
New Windsor, NY 12553

CONTRACT
CONTRACT G
GENERAL CONSTRUCTION

STATUS
FINAL BID DOCUMENT

SHEET TITLE
PLUMBING SITE PLAN - MAIN FIRE HOUSE

DRAWING No.
PS2 100.00

X:\VGFD \Vails Gate Fire Dept\VGFD2001\Vails Gate FD-New Firehouse\02-BIM-CADD\Cnc-dwgs\plans\Main Fire House\PS 100.0\- PLUMBING SITE PLAN - MAIN FIRE HOUSE.dwg Last Modified: Jul 15, 2022 - 1:50pm Plotted on: Jul 18, 2022 - 8:32am By: ssecarpenan

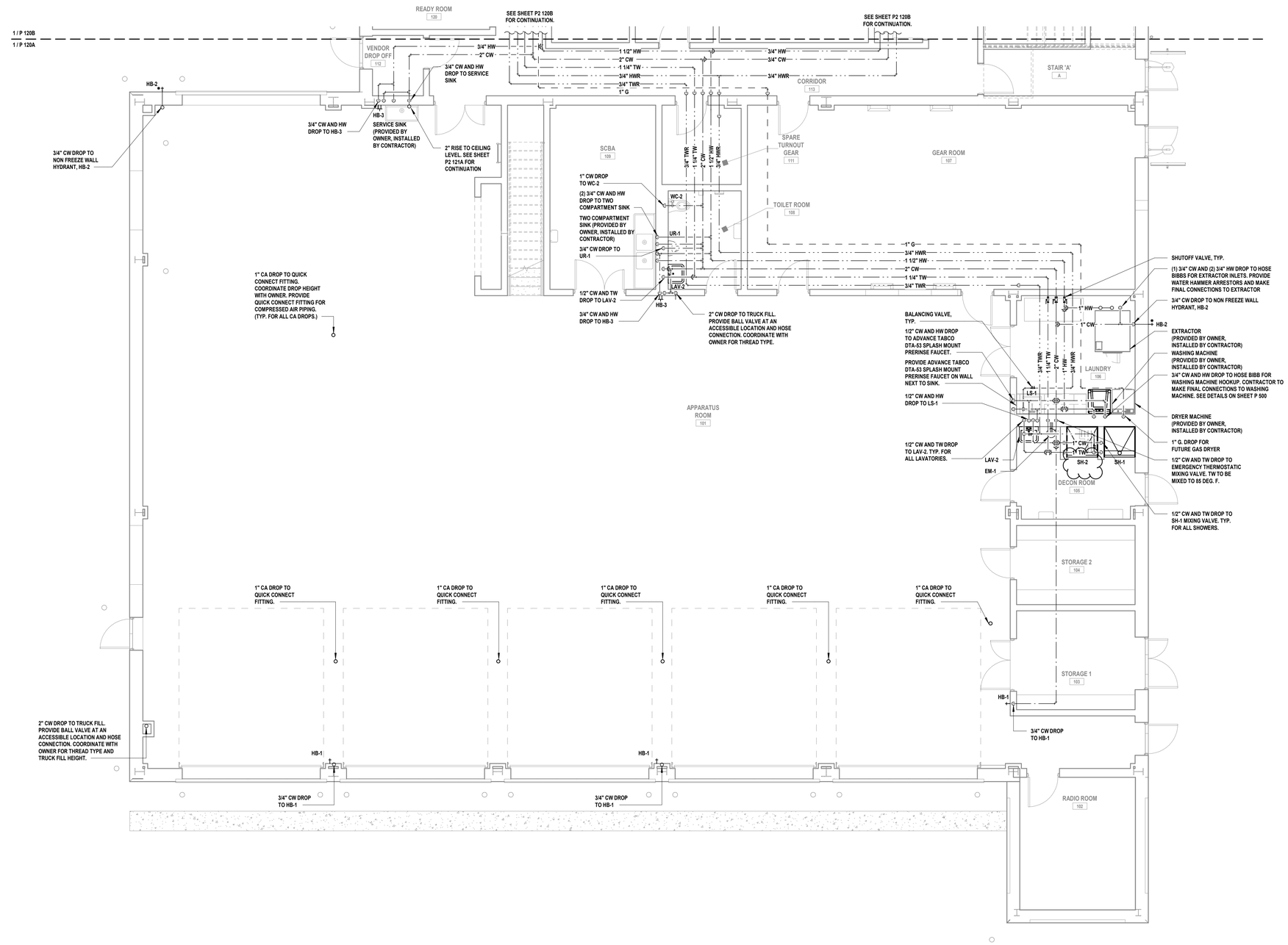

1 Domestic Water and Gas First Floor Plan - Area A

SCALE: 3/16" = 1'-0"

PROJECT NORTH

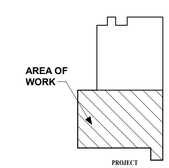

Key Plan

PROJECT NORTH

C:\Users\kescarraman\Documents\VGFD2001-Central21-P_Kescarraman.rvt

12/22/2022 2:31:42 PM

H2M architects + engineers

538 Broad Hollow Road, 4th Floor East
Melville, NY 11747
631.756.8000 • www.h2m.com

CONSULTANTS:

MARK	DATE	DESCRIPTION
2	12/22/2022	REVS. PER TOWN COMMENTS

STATE OF NEW YORK · JONATHAN RICHARD MUNCHER · 096440-1 · LICENSED PROFESSIONAL ENGINEER

"ALTERATION OF THIS DOCUMENT EXCEPT BY A LICENSED PROFESSIONAL IS ILLEGAL"

DESIGNED BY:	DRAWN BY:	CHECKED BY:	REVIEWED BY:
JRM	KJE		

PROJECT No:	DATE:	SCALE:
VGFD2001	JULY 2022	AS SHOWN

CLIENT

VAILS GATE FIRE DISTRICT

New Storage Building (Phase I)
New Fire Station (Phase II)

872 Blooming Grove Turnpike
New Windsor, NY 12553

CONTRACT

CONTRACT G
GENERAL CONSTRUCTION

STATUS

FINAL BID DOCUMENT

SHEET TITLE

PARTIAL DOMESTIC WATER AND GAS FIRST FLOOR PLAN
NEW FIRE HOUSE
PHASE 2

DRAWING No.

P2 120A.02

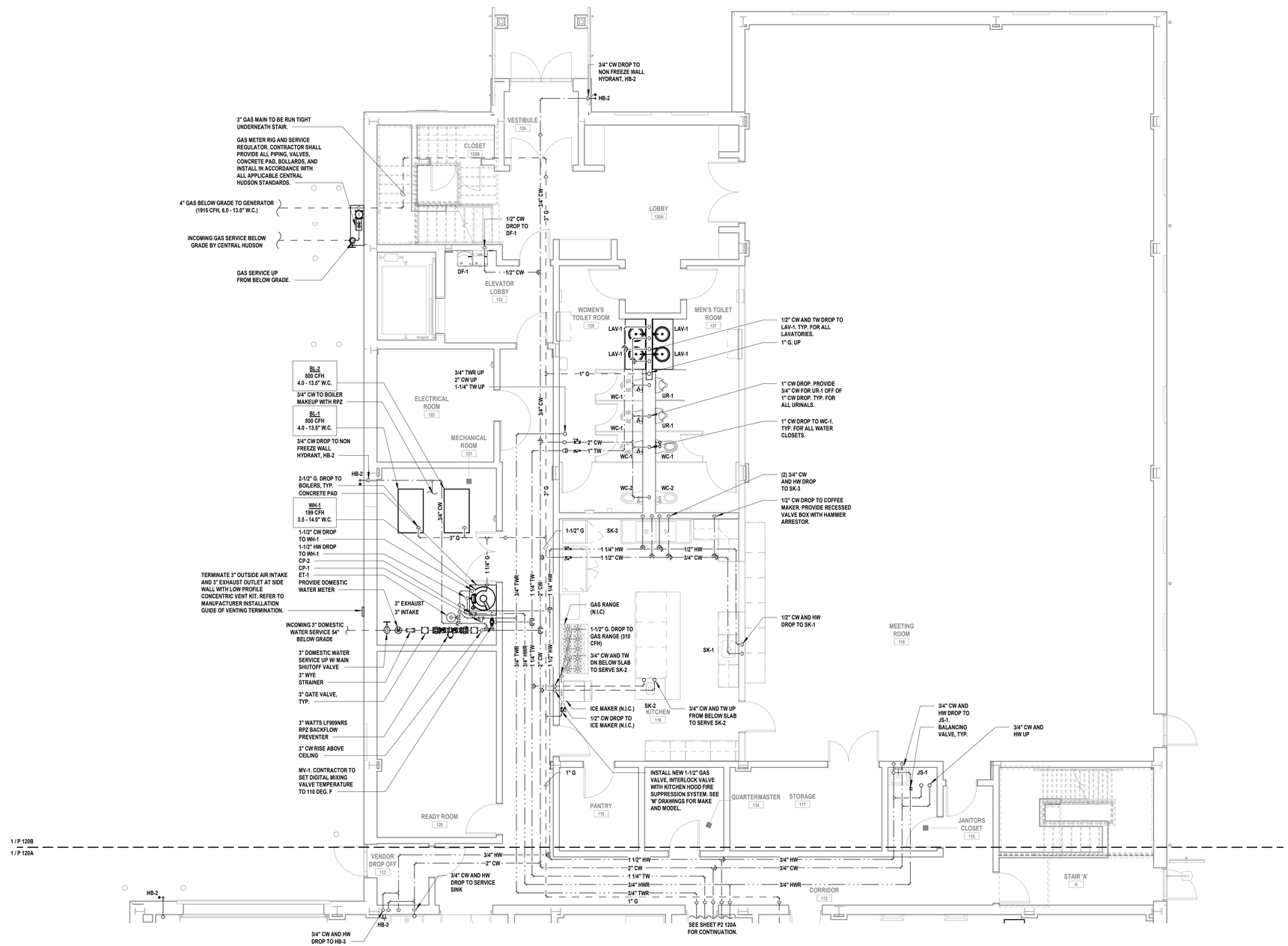

1 Domestic and Gas First Floor Part Plan - Area B

SCALE: 3/16" = 1'-0"

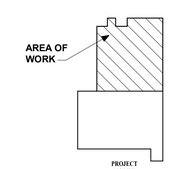

Key Plan

H2M architects + engineers

538 Broad Hollow Road, 4th Floor East
Melville, NY 11747
631.756.8000 • www.h2m.com

CONSULTANTS:

MARK	DATE	DESCRIPTION

STATE OF NEW YORK · JONATHAN RICHARD MUNSTER · 096440-1 · LICENSED PROFESSIONAL ENGINEER

"ALTERATION OF THIS DOCUMENT EXCEPT BY A LICENSED PROFESSIONAL IS ILLEGAL"

DESIGNED BY:	DRAWN BY:	CHECKED BY:	REVIEWED BY:
JRM	KJE		
PROJECT No: VGFD2001	DATE: JULY 2022		SCALE: AS SHOWN

CLIENT

VAILS GATE FIRE DISTRICT

New Storage Building (Phase I)
New Fire Station (Phase II)

872 Blooming Grove Turnpike
New Windsor, NY 12553

CONTRACT

CONTRACT G
GENERAL CONSTRUCTION

STATUS

FINAL BID DOCUMENT

SHEET TITLE

PARTIAL DOMESTIC WATER AND GAS FIRST FLOOR PLAN
NEW FIRE HOUSE
PHASE 2

DRAWING No.

P2 120B.00

C:\Users\kescarraman\Documents\VGFD2001-Central21-P_Kescarraman.rvt

7/18/2022 8:12:29 AM

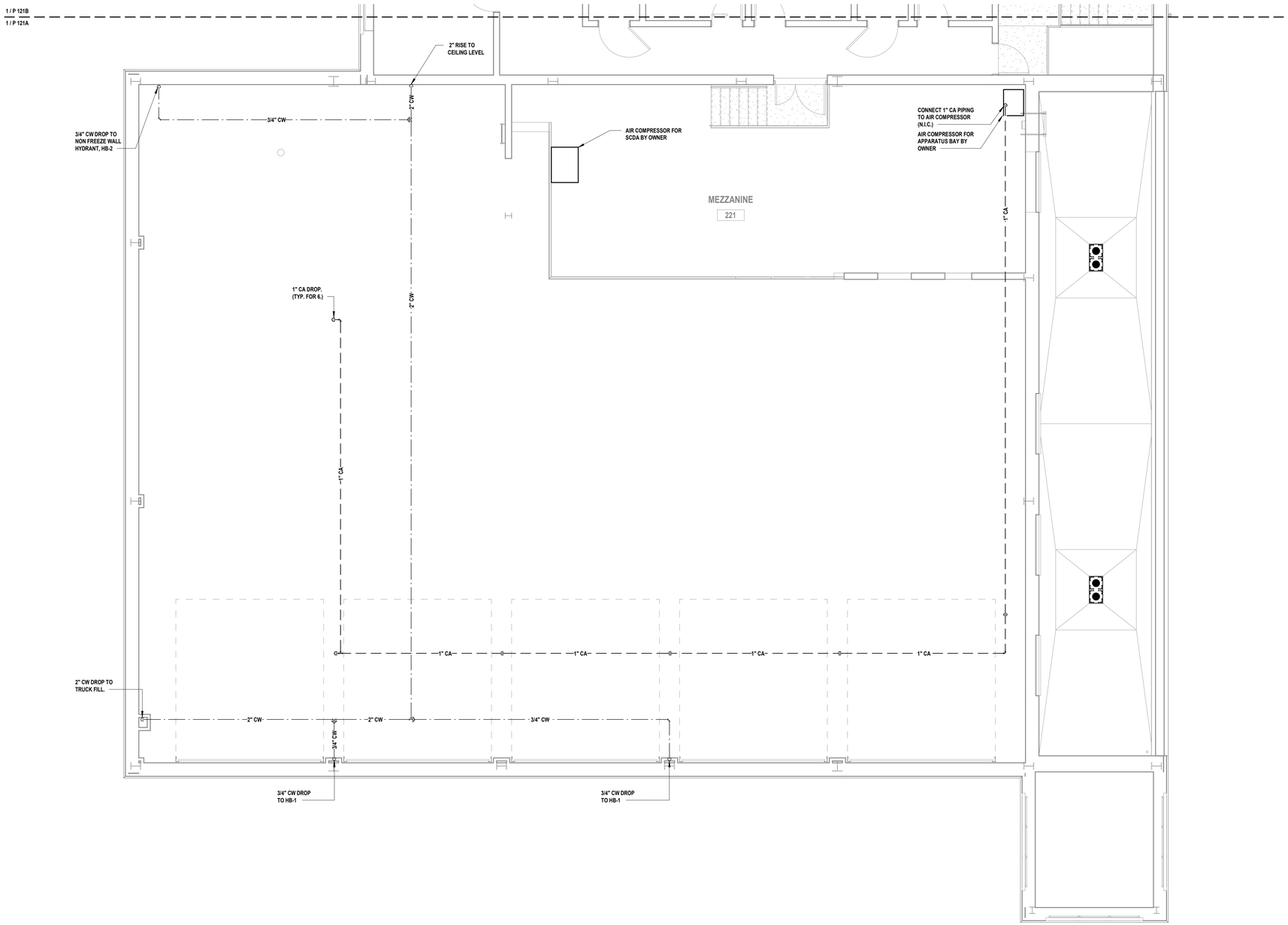

1 **Domestic Water and Gas Second Floor Plan - Area A**
SCALE: 3/16" = 1'-0"

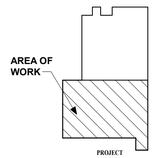

Key Plan

H2M architects + engineers
538 Broad Hollow Road, 4th Floor East
Melville, NY 11747
631.756.8000 • www.h2m.com

CONSULTANTS:

MARK	DATE	DESCRIPTION

STATE OF NEW YORK · JONATHAN RICHARD MURATORE · 096440-1 · LICENSED PROFESSIONAL ENGINEER

"ALTERATION OF THIS DOCUMENT EXCEPT BY A LICENSED PROFESSIONAL IS ILLEGAL."

DESIGNED BY:	DRAWN BY:	CHECKED BY:	REVIEWED BY:
JRM	KJE		

PROJECT No:	DATE:	SCALE:
VGFD2001	JULY 2022	AS SHOWN

CLIENT
VAILS GATE FIRE DISTRICT

New Storage Building (Phase I)
New Fire Station (Phase II)

872 Blooming Grove Turnpike
New Windsor, NY 12553

CONTRACT
CONTRACT G
GENERAL CONSTRUCTION

STATUS
FINAL BID DOCUMENT

SHEET TITLE
PARTIAL DOMESTIC WATER AND GAS SECOND FLOOR PLAN
NEW FIRE HOUSE
PHASE 2

DRAWING No.
P2 121A.00

C:\Users\kescarraman\Documents\VGFD2001-Central21-P_Kescarraman.rvt
7/18/2022 8:12:30 AM

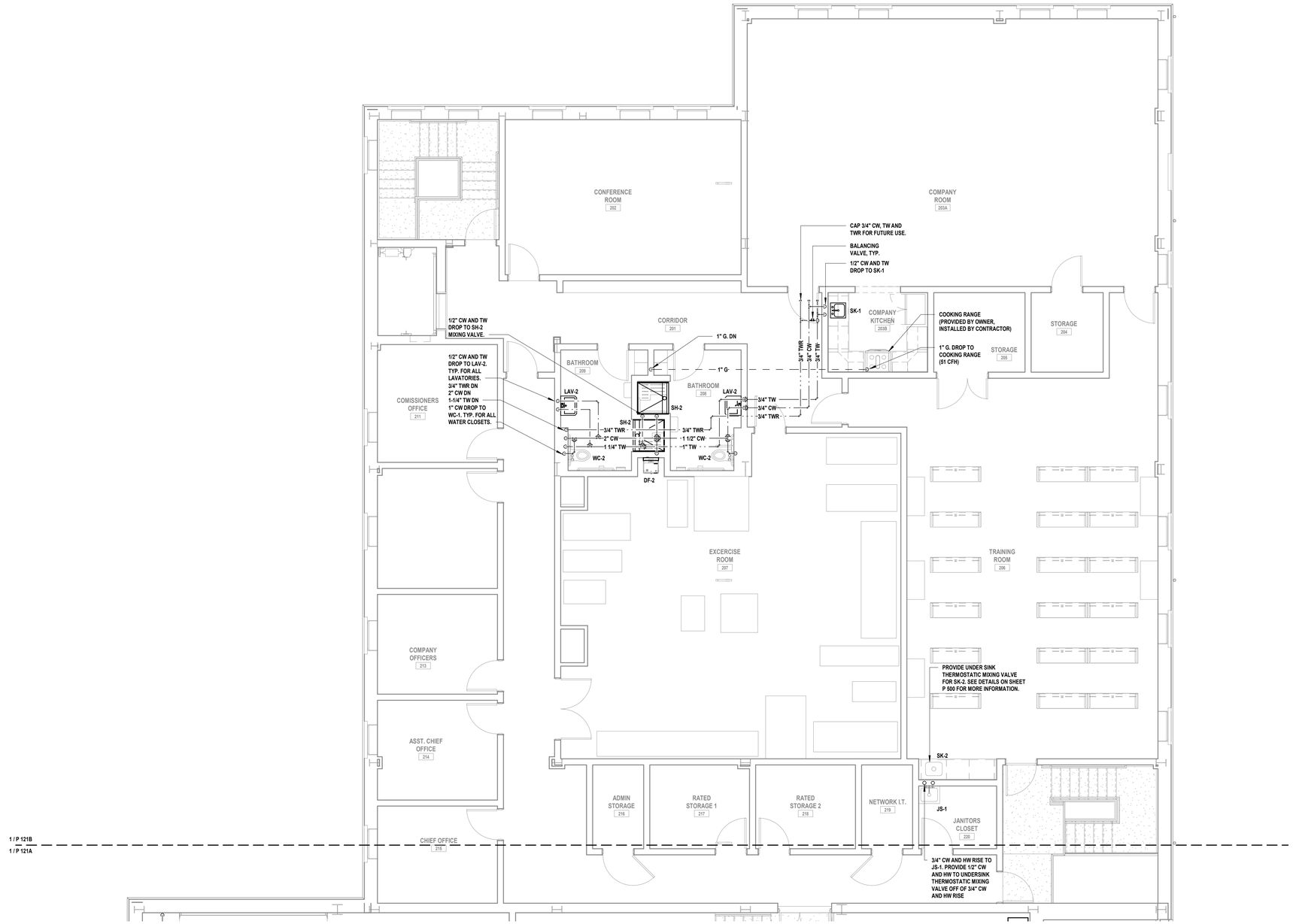

1 Domestic and Gas Second Floor Part Plan - Area B

SCALE: 3/16" = 1'-0"

PROJECT NORTH

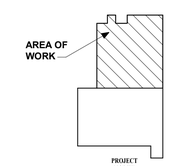

Key Plan

PROJECT NORTH

C:\Users\kescarraman\Documents\VGFD2001-Central21-P_Kescarraman.rvt

7/18/2022 8:12:32 AM

H2M architects + engineers

538 Broad Hollow Road, 4th Floor East
Melville, NY 11747
631.756.8000 • www.h2m.com

CONSULTANTS:

MARK	DATE	DESCRIPTION

STATE OF NEW YORK · JONATHAN RICHARD HUNTSMAN · 096440-1 · LICENSED PROFESSIONAL ENGINEER

"ALTERATION OF THIS DOCUMENT EXCEPT BY A LICENSED PROFESSIONAL IS ILLEGAL"

DESIGNED BY:	DRAWN BY:	CHECKED BY:	REVIEWED BY:
JRM	KJE		
PROJECT No: VGFD2001	DATE: JULY 2022		SCALE: AS SHOWN

CLIENT

VAILS GATE FIRE DISTRICT

New Storage Building (Phase I)
New Fire Station (Phase II)

872 Blooming Grove Turnpike
New Windsor, NY 12553

CONTRACT

CONTRACT G
GENERAL CONSTRUCTION

STATUS

FINAL BID DOCUMENT

SHEET TITLE

PARTIAL DOMESTIC WATER AND GAS SECOND FLOOR PLAN NEW FIRE HOUSE PHASE 2

DRAWING No.

P2 121B.00

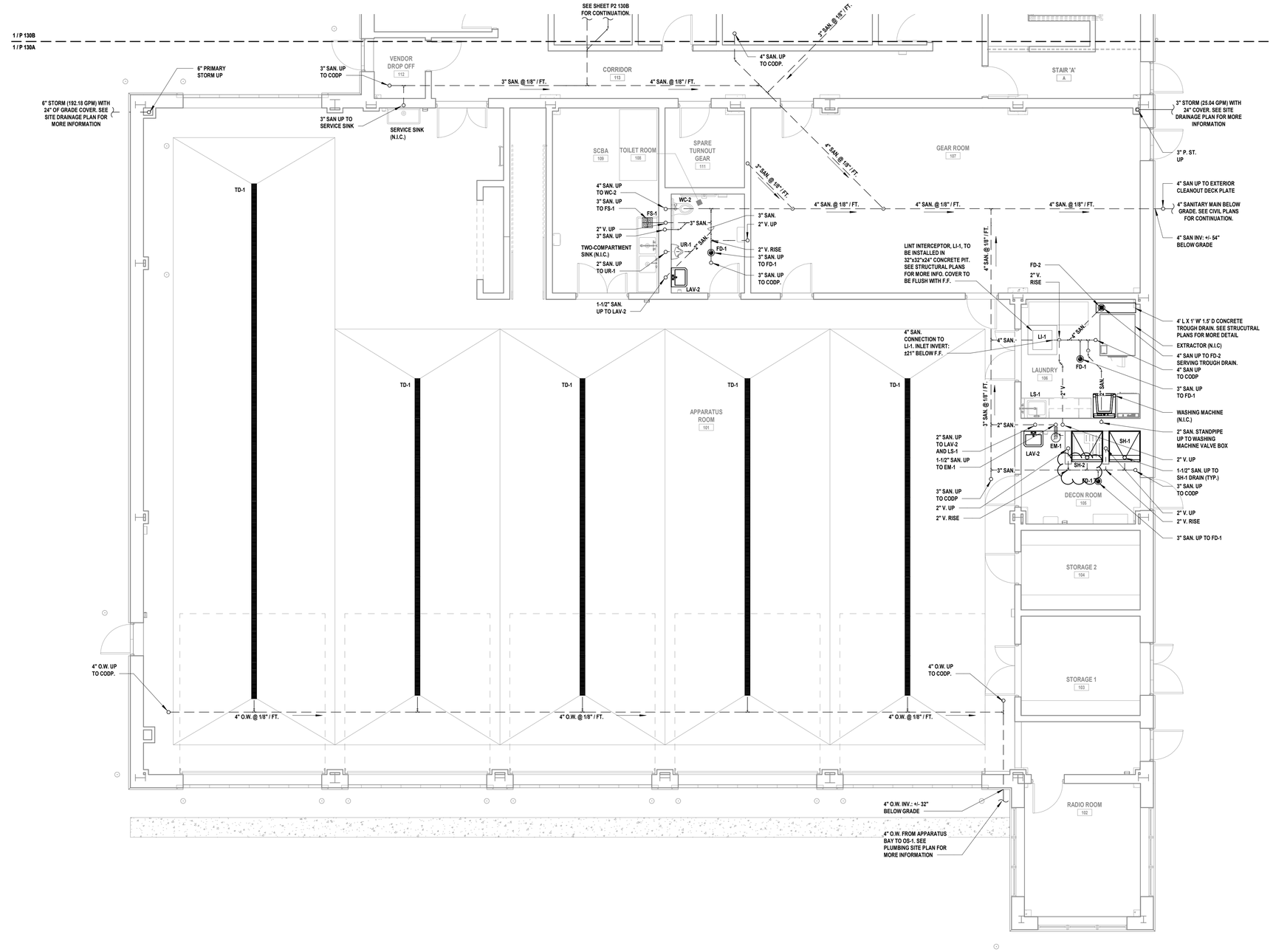

1 Sanitary, Vent, and Storm Underslab Part Plan - Area A

SCALE: 3/16" = 1'-0"

PROJECT NORTH

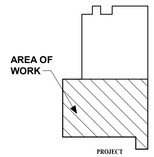

Key Plan

PROJECT NORTH

C:\Users\kescarraman\Documents\VGFD2001-Central2L-P_Kescarraman.rvt

12/22/2022 2:31:43 PM

H2M architects + engineers

538 Broad Hollow Road, 4th Floor East
Melville, NY 11747
631.756.8000 • www.h2m.com

CONSULTANTS:

MARK	DATE	DESCRIPTION
2	12/22/2022	REVS. PER TOWN COMMENTS

STATE OF NEW YORK · JONATHAN RICHARD HUNTSMAN · 096440-1 · LICENSED PROFESSIONAL ENGINEER

"ALTERATION OF THIS DOCUMENT EXCEPT BY A LICENSED PROFESSIONAL IS ILLEGAL"

DESIGNED BY:	DRAWN BY:	CHECKED BY:	REVIEWED BY:
JRM	KJE		

PROJECT No:	DATE:	SCALE:
VGFD2001	JULY 2022	AS SHOWN

CLIENT

VAILS GATE FIRE DISTRICT

New Storage Building (Phase I)
New Fire Station (Phase II)

872 Blooming Grove Turnpike
New Windsor, NY 12553

CONTRACT

CONTRACT G
GENERAL CONSTRUCTION

STATUS

FINAL BID DOCUMENT

SHEET TITLE

PARTIAL SANITARY, VENT & STORM UNDERSLAB PLAN
NEW FIRE HOUSE
PHASE 2

DRAWING No.

P2 130A.02

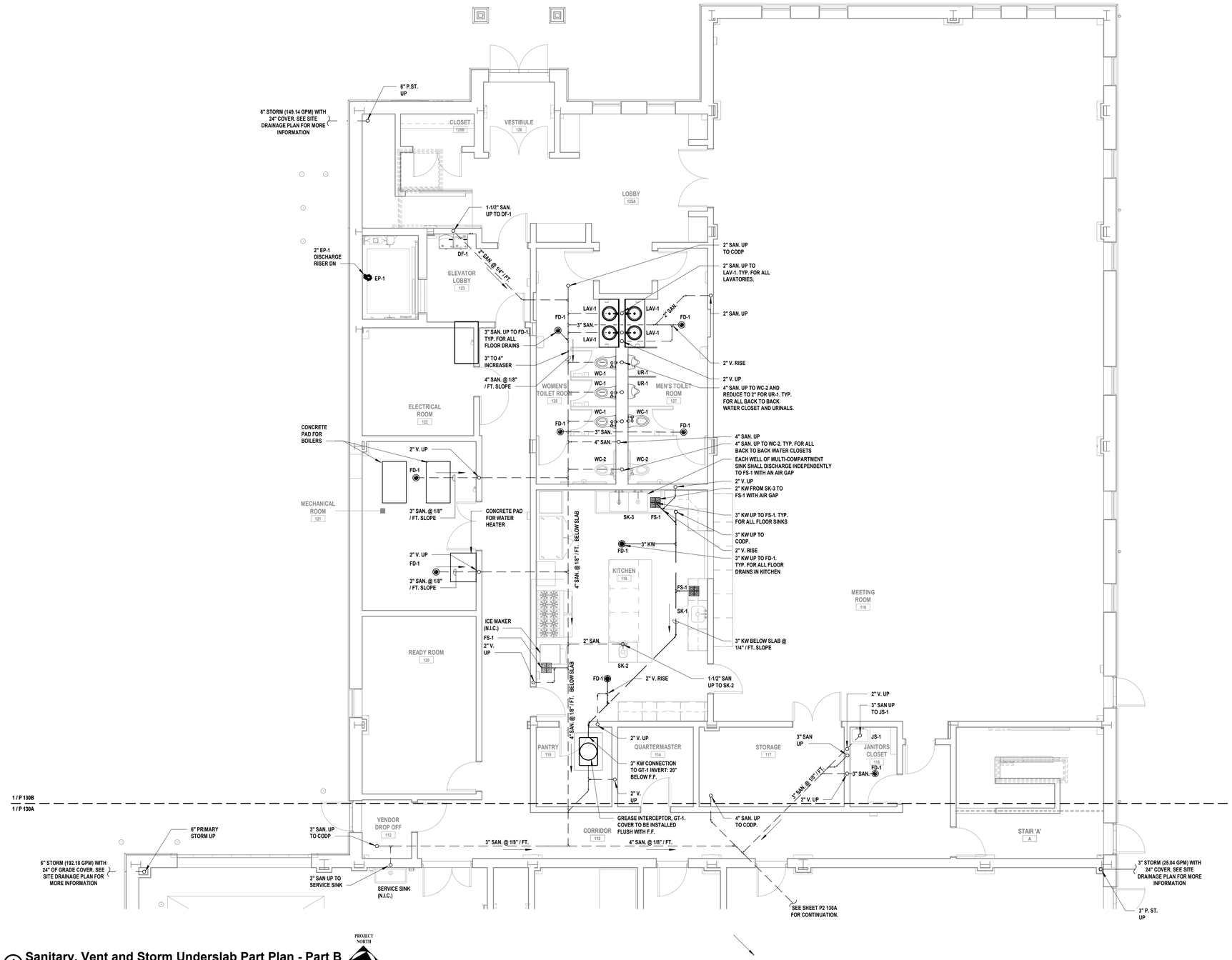

1 Sanitary, Vent and Storm Underslab Part Plan - Part B

SCALE: 3/16" = 1'-0"

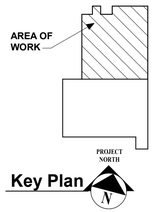

Key Plan

H2M architects + engineers

538 Broad Hollow Road, 4th Floor East
Melville, NY 11747
631.756.8000 • www.h2m.com

CONSULTANTS:

MARK	DATE	DESCRIPTION

STATE OF NEW YORK · JONATHAN RICHARD HUNTSMAN · 096440-1 · LICENSED PROFESSIONAL ENGINEER

"ALTERATION OF THIS DOCUMENT EXCEPT BY A LICENSED PROFESSIONAL IS ILLEGAL"

DESIGNED BY:	DRAWN BY:	CHECKED BY:	REVIEWED BY:
Designer	Author		
PROJECT No: VGFD2001	DATE: JULY 2022		SCALE: AS SHOWN

CLIENT

VAILS GATE FIRE DISTRICT

New Storage Building (Phase I)
New Fire Station (Phase II)

872 Blooming Grove Turnpike
New Windsor, NY 12553

CONTRACT

CONTRACT G
GENERAL CONSTRUCTION

STATUS

FINAL BID DOCUMENT

SHEET TITLE

PARTIAL SANITARY, VENT & STORM UNDERSLAB PLAN
NEW FIRE HOUSE
PHASE 2

DRAWING No.

P2 130B.00

C:\Users\kescarraman\Documents\VGFD2001-Central21-P_Kescarraman.rvt

7/18/2022 8:12:38 AM

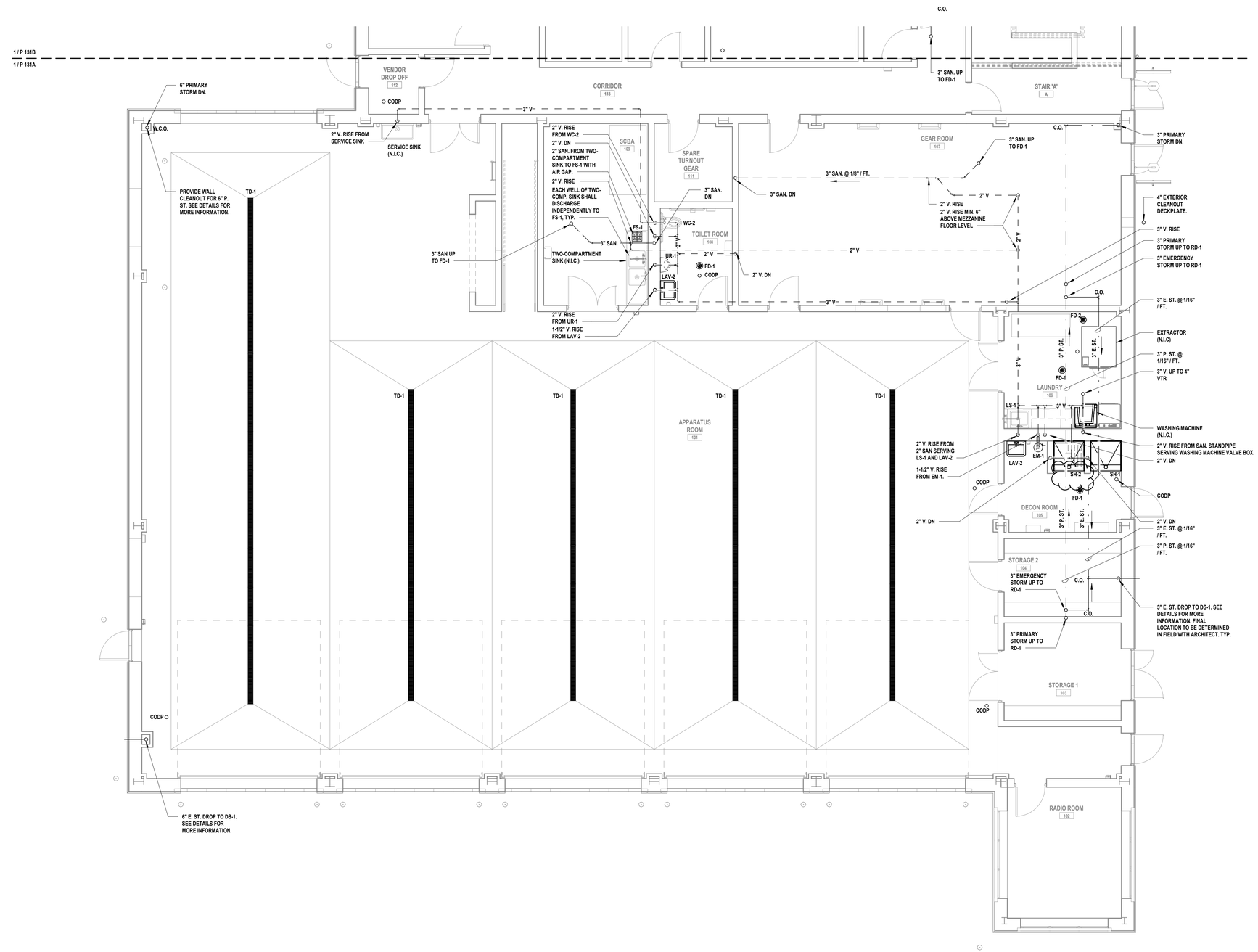

1 Sanitary, Vent and Storm First Floor Part Plan - Part A
SCALE: 3/16" = 1'-0"

PROJECT NORTH

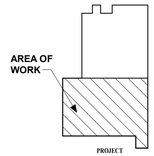

Key Plan

PROJECT NORTH

C:\Users\kescarraman\Documents\VGFD2001-Central21-P_Kescarraman.rvt

12/22/2022 2:31:45 PM

H 2 M architects + engineers

538 Broad Hollow Road, 4th Floor East
Melville, NY 11747
631.756.8000 • www.h2m.com

CONSULTANTS:

MARK	DATE	DESCRIPTION
2	12/22/2022	REVS. PER TOWN COMMENTS

STATE OF NEW YORK · JONATHAN RICHARD HUNTSMAN · 096440-1 · LICENSED PROFESSIONAL ENGINEER

"ALTERATION OF THIS DOCUMENT EXCEPT BY A LICENSED PROFESSIONAL IS ILLEGAL"

DESIGNED BY:	DRAWN BY:	CHECKED BY:	REVIEWED BY:
JRM	KJE		

PROJECT No:	DATE:	SCALE:
VGFD2001	JULY 2022	AS SHOWN

CLIENT

VAILS GATE FIRE DISTRICT

New Storage Building (Phase I)
New Fire Station (Phase II)

872 Blooming Grove Turnpike
New Windsor, NY 12553

CONTRACT

CONTRACT G
GENERAL CONSTRUCTION

STATUS

FINAL BID DOCUMENT

SHEET TITLE

PARTIAL SANITARY, VENT & STORM FIRST FLOOR PLAN
NEW FIRE HOUSE
PHASE 2

DRAWING No.

P2 131A.02

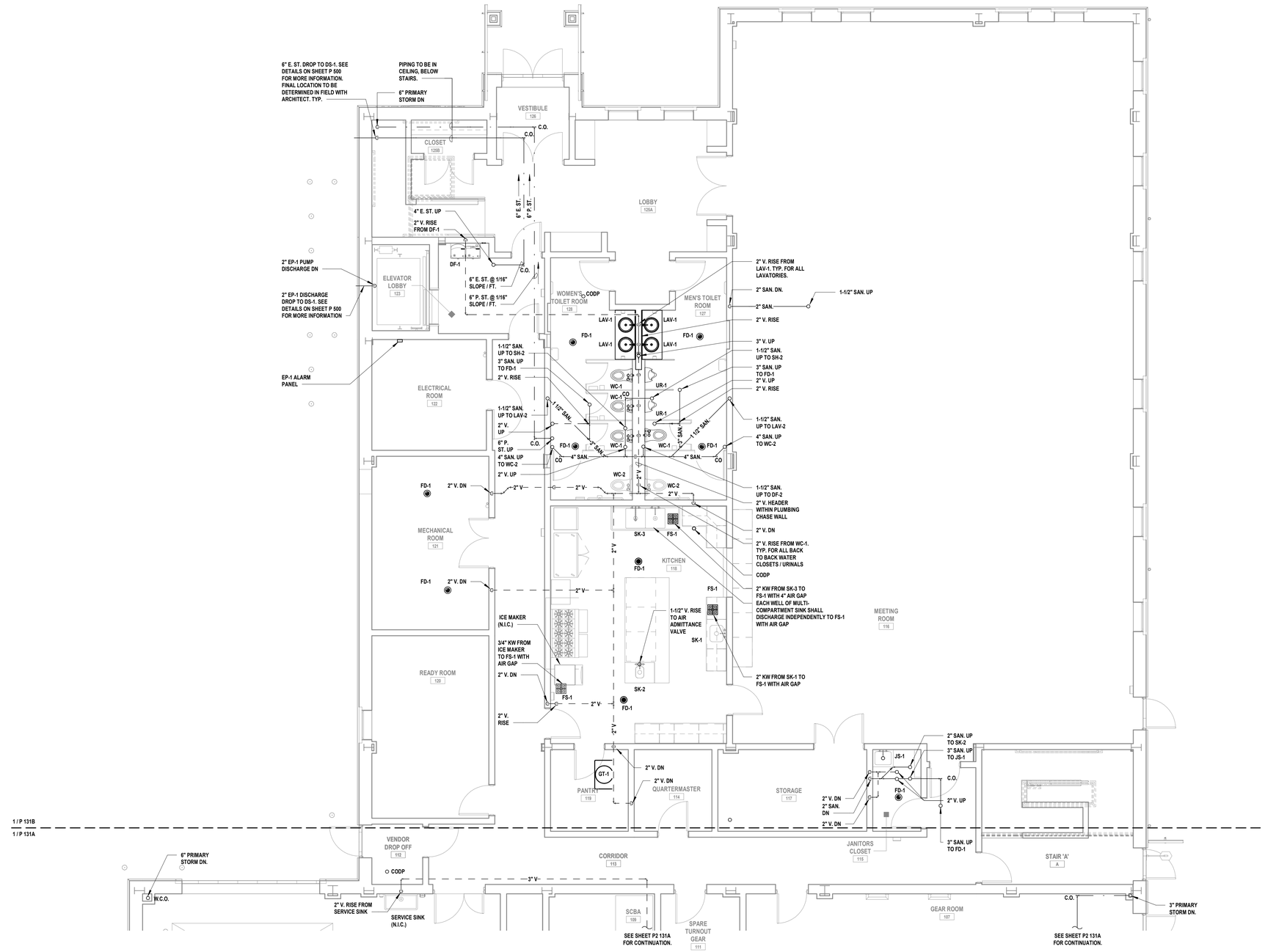

1 Sanitary, Vent and Storm First Floor Part Plan - Part B

SCALE: 3/16" = 1'-0"

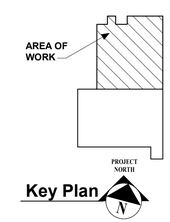

Key Plan

H2M architects + engineers

538 Broad Hollow Road, 4th Floor East
Melville, NY 11747
631.756.8000 • www.h2m.com

CONSULTANTS:

MARK	DATE	DESCRIPTION

STATE OF NEW YORK · JONATHAN RICHARD HUNTSCHE · 096440-1 · LICENSED PROFESSIONAL ENGINEER

"ALTERATION OF THIS DOCUMENT EXCEPT BY A LICENSED PROFESSIONAL IS ILLEGAL"

DESIGNED BY:	DRAWN BY:	CHECKED BY:	REVIEWED BY:
JRM	KJE		
PROJECT No: VGFD2001	DATE: JULY 2022		SCALE: AS SHOWN

CLIENT

VAILS GATE FIRE DISTRICT

New Storage Building (Phase I)
New Fire Station (Phase II)

872 Blooming Grove Turnpike
New Windsor, NY 12553

CONTRACT

CONTRACT G
GENERAL CONSTRUCTION

STATUS

FINAL BID DOCUMENT

SHEET TITLE

PARTIAL SANITARY, VENT & STORM FIRST FLOOR PLAN NEW FIRE HOUSE PHASE 2

DRAWING No.

P2 131B.00

C:\Users\kescarmann\Documents\VGFD2001-Central21-P_Kescarmann.rvt

7/18/2022 8:12:44 AM

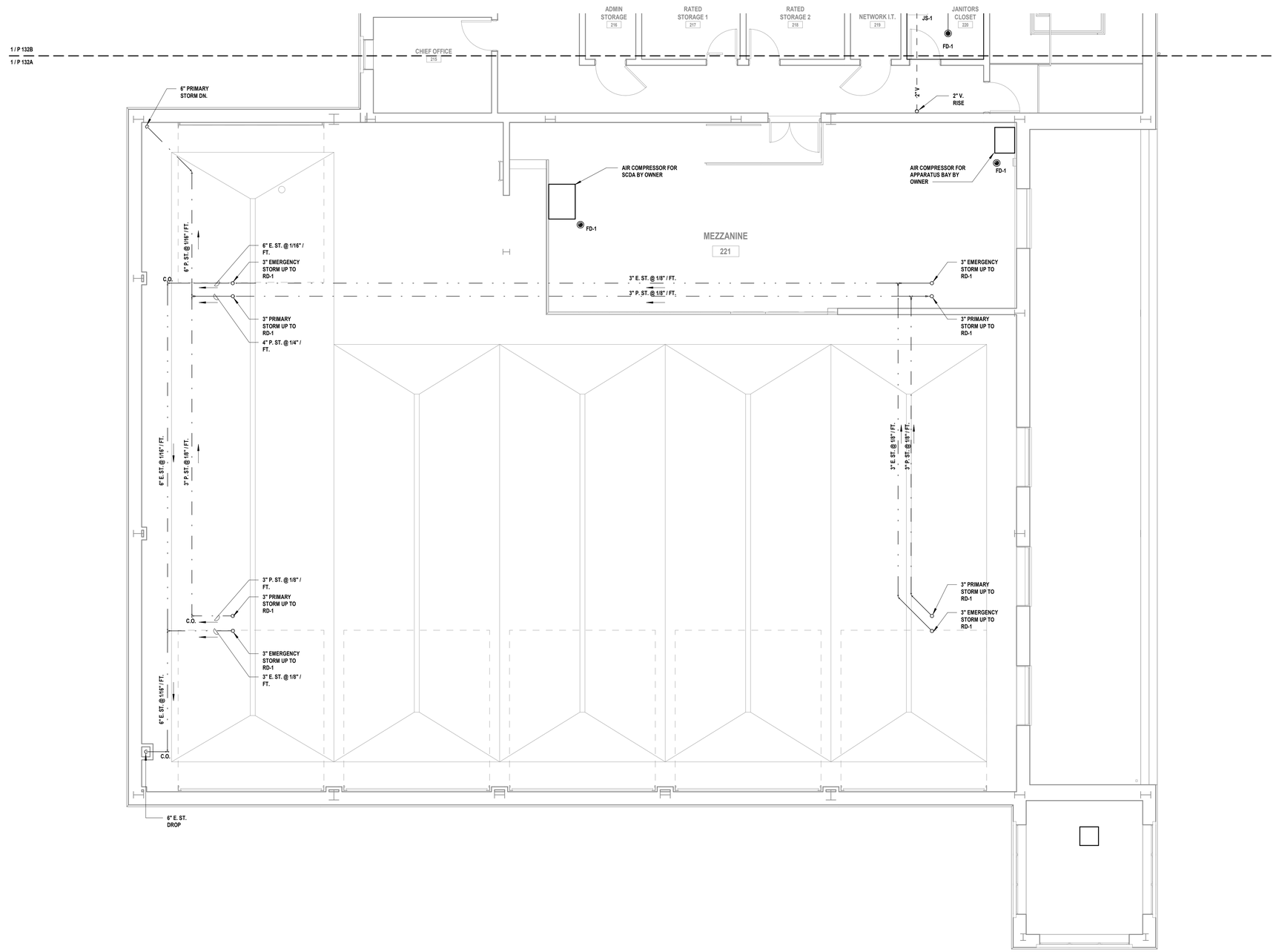

1 Sanitary, Vent and Storm Second Floor Part Plan - Part B
SCALE: 3/16" = 1'-0"

PROJECT NORTH

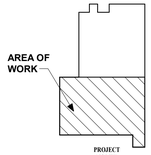

Key Plan

PROJECT NORTH

C:\Users\kescarraman\Documents\VGFD2001-Central21-P_Kescarraman.rvt

7/18/2022 8:12:45 AM

H2M architects + engineers
538 Broad Hollow Road, 4th Floor East
Melville, NY 11747
631.756.8000 • www.h2m.com

CONSULTANTS:

MARK	DATE	DESCRIPTION

STATE OF NEW YORK · JONATHAN RICHARD MURPHY · 096440-1 · LICENSED PROFESSIONAL ENGINEER

"ALTERATION OF THIS DOCUMENT EXCEPT BY A LICENSED PROFESSIONAL IS ILLEGAL"

DESIGNED BY:	DRAWN BY:	CHECKED BY:	REVIEWED BY:
JRM	KJE		
PROJECT No: VGFD2001	DATE: JULY 2022		SCALE: AS SHOWN

CLIENT
VAILS GATE FIRE DISTRICT

New Storage Building (Phase I)
New Fire Station (Phase II)

872 Blooming Grove Turnpike
New Windsor, NY 12553

CONTRACT
CONTRACT G
GENERAL CONSTRUCTION

STATUS
FINAL BID DOCUMENT

SHEET TITLE
PARTIAL SANITARY, VENT, & STORM SECOND FLOOR PLAN
NEW FIRE HOUSE
PHASE 2

DRAWING No.
P2 132A.00

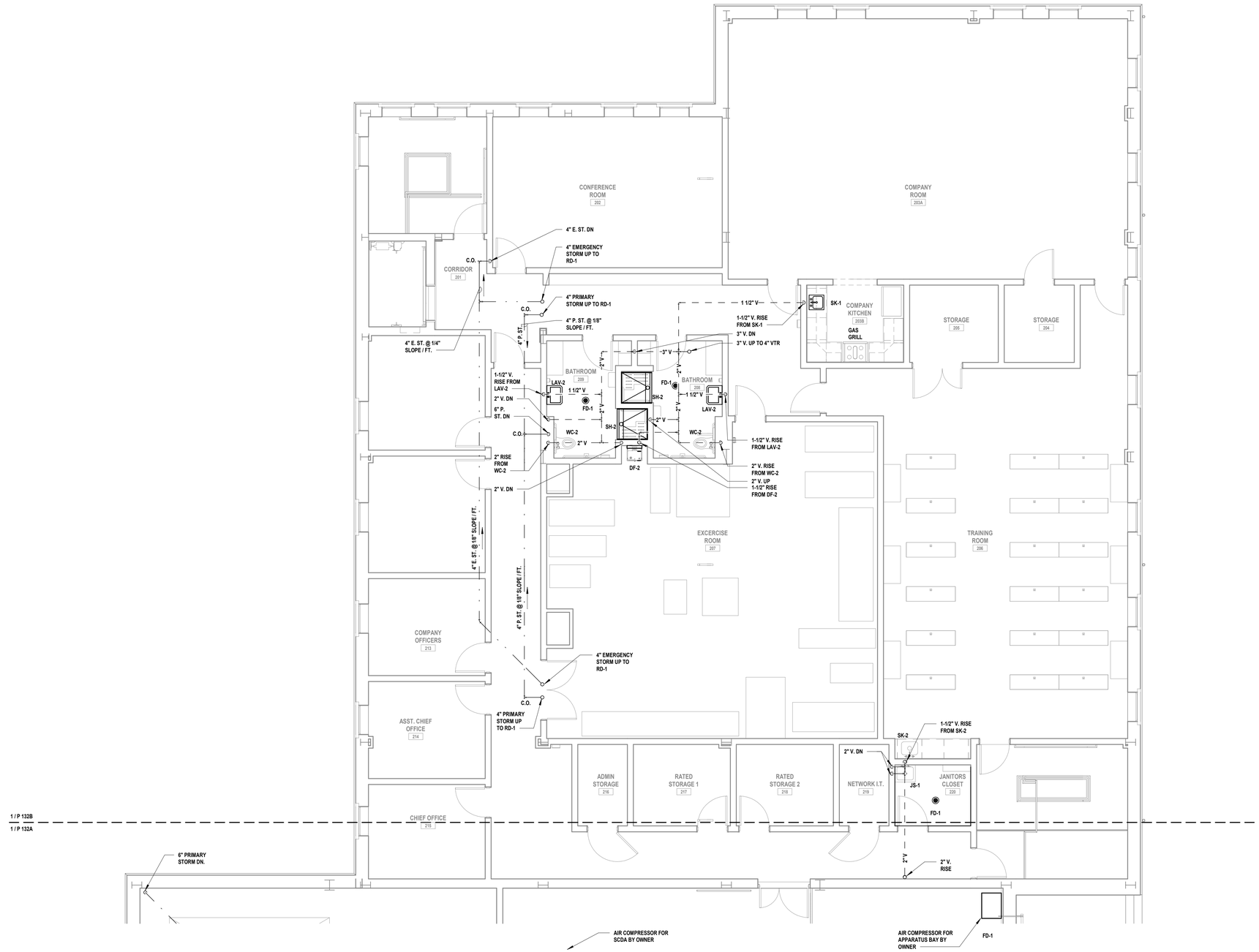

1 Sanitary, Vent and Storm Second Floor Part Plan - Part B
SCALE: 3/16" = 1'-0"

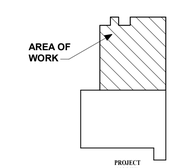

Key Plan

H2M architects + engineers
538 Broad Hollow Road, 4th Floor East
Melville, NY 11747
631.756.8000 • www.h2m.com

CONSULTANTS:

MARK	DATE	DESCRIPTION

STATE OF NEW YORK · JONATHAN RICHARD MURATORE · 096440-1 · LICENSED PROFESSIONAL ENGINEER

"ALTERATION OF THIS DOCUMENT EXCEPT BY A LICENSED PROFESSIONAL IS ILLEGAL."

DESIGNED BY:	DRAWN BY:	CHECKED BY:	REVIEWED BY:
JRM	KJE		
PROJECT No:	DATE:		SCALE:
VGFD2001	JULY 2022		AS SHOWN

CLIENT
VAILS GATE FIRE DISTRICT

New Storage Building (Phase I)
New Fire Station (Phase II)

872 Blooming Grove Turnpike
New Windsor, NY 12553

CONTRACT
CONTRACT G
GENERAL CONSTRUCTION

STATUS
FINAL BID DOCUMENT

SHEET TITLE
PARTIAL SANITARY, VENT & STORM SECOND FLOOR PLAN
NEW FIRE HOUSE
PHASE 2

DRAWING No.
P2 132B.00

C:\Users\kescarraman\Documents\VGFD2001-Central21-P_Kescarraman.rvt
7/18/2022 8:12:48 AM

1 Plumbing Roof Plan - Part A
SCALE: 3/16" = 1'-0"

PROJECT NORTH

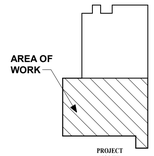

Key Plan

PROJECT NORTH

C:\Users\kescarraman\Documents\VGFD2001-Central21-P_Kescarraman.rvt

7/18/2022 8:12:49 AM

H2M architects + engineers

538 Broad Hollow Road, 4th Floor East
Melville, NY 11747
631.756.8000 • www.h2m.com

CONSULTANTS:

MARK	DATE	DESCRIPTION

STATE OF NEW YORK · JONATHAN RICHARD HUNTSMAN · 096440-1 · LICENSED PROFESSIONAL ENGINEER

ALTERATION OF THIS DOCUMENT EXCEPT BY A LICENSED PROFESSIONAL IS ILLEGAL

DESIGNED BY:	DRAWN BY:	CHECKED BY:	REVIEWED BY:
JRM	KJE		

PROJECT No:	DATE:	SCALE:
VGFD2001	JULY 2022	AS SHOWN

CLIENT

VAILS GATE FIRE DISTRICT

New Storage Building (Phase I)
New Fire Station (Phase II)

872 Blooming Grove Turnpike
New Windsor, NY 12553

CONTRACT

CONTRACT G
GENERAL CONSTRUCTION

STATUS

FINAL BID DOCUMENT

SHEET TITLE

PLUMBING
PARTIAL ROOF PLAN
NEW FIRE HOUSE
PHASE 2

DRAWING No.

P2 140A.00

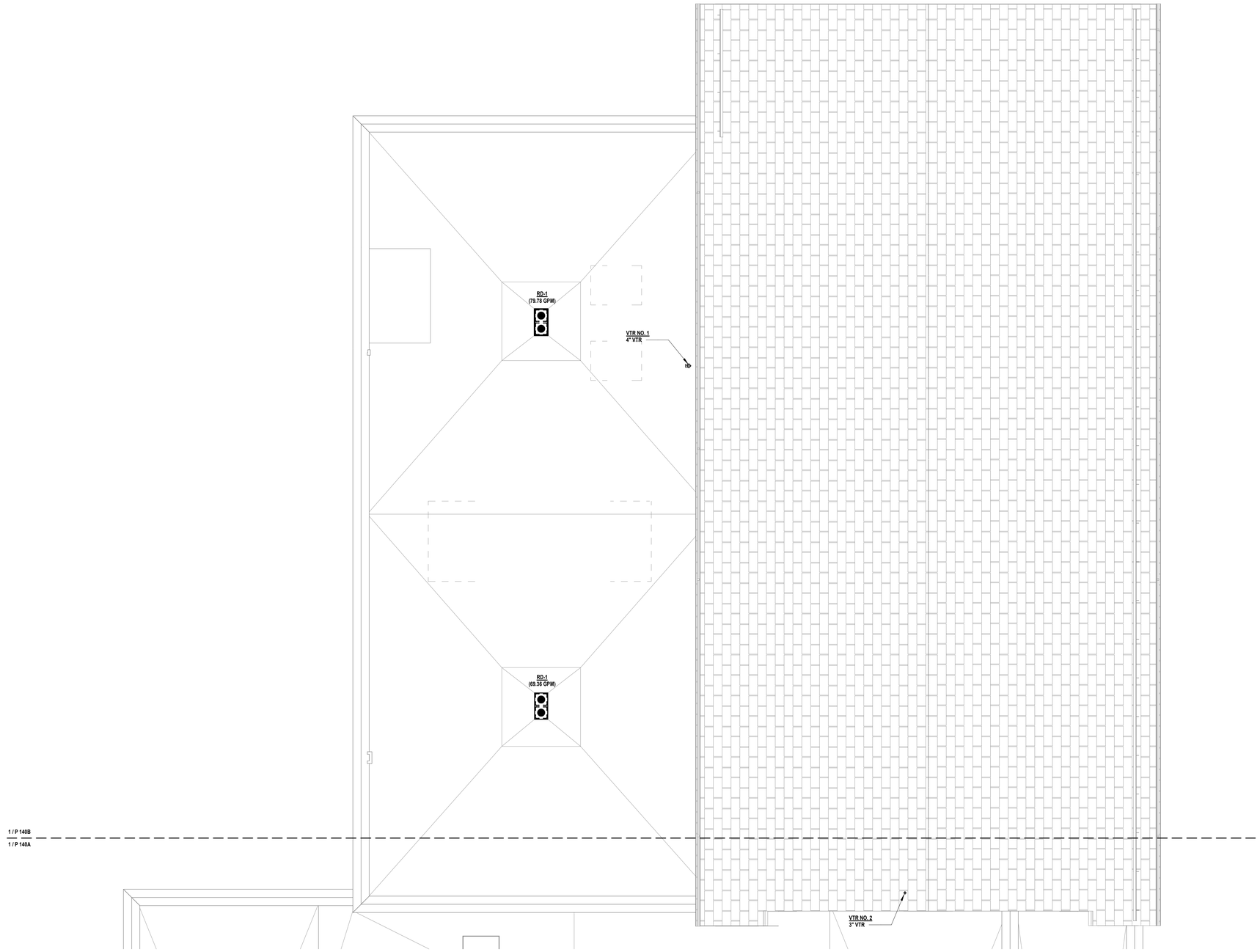

1 Plumbing Roof Plan - Part B
SCALE: 3/16" = 1'-0"

PROJECT NORTH

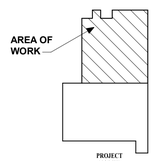

Key Plan

PROJECT NORTH

C:\Users\kescarraman\Documents\VGFD2001-Centra21-P_Kescarraman.rvt

7/18/2022 8:12:50 AM

H2M architects + engineers
538 Broad Hollow Road, 4th Floor East
Melville, NY 11747
631.756.8000 • www.h2m.com

CONSULTANTS:

MARK	DATE	DESCRIPTION

STATE OF NEW YORK · JONATHAN RICHARD HUNTSMAN · 096440-1 · LICENSED PROFESSIONAL ENGINEER

"ALTERATION OF THIS DOCUMENT EXCEPT BY A LICENSED PROFESSIONAL IS ILLEGAL"

DESIGNED BY:	DRAWN BY:	CHECKED BY:	REVIEWED BY:
JRM	KJE		

PROJECT No:	DATE:	SCALE:
VGFD2001	JULY 2022	AS SHOWN

CLIENT

VAILS GATE FIRE DISTRICT

New Storage Building (Phase I)
New Fire Station (Phase II)

872 Blooming Grove Turnpike
New Windsor, NY 12553

CONTRACT

CONTRACT G
GENERAL CONSTRUCTION

STATUS

FINAL BID DOCUMENT

SHEET TITLE

PLUMBING
PARTIAL ROOF PLAN
NEW FIRE HOUSE
PHASE 2

DRAWING No.

P2 140B.00

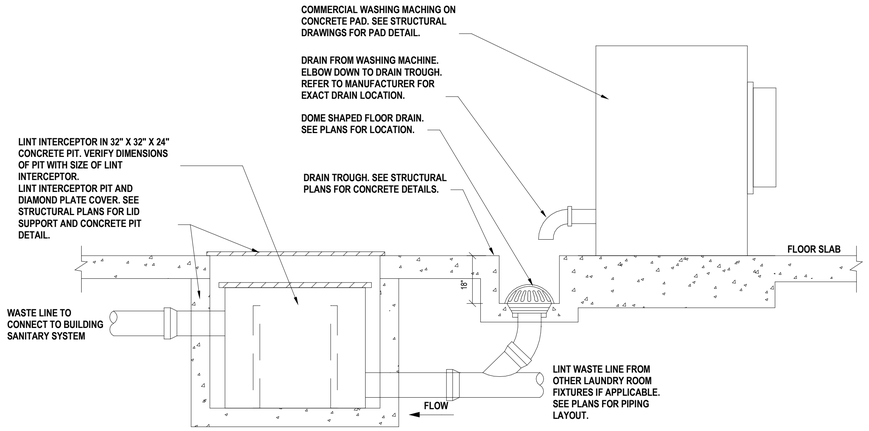

1 Lint Interceptor and Washing Machine Detail

SCALE: NTS

HANGER SPACING

PIPING MATERIAL	MAX. HORIZONTAL (FT)	MAX. VERTICAL (FT)
ABS PIPE	4	10
ALUMINUM TUBING	10	15
BRASS PIPE	10	10
CAST-IRON PIPE	5	15
COPPER OR COPPER ALLOY PIPE	12	10
COPPER OR COPPER ALLOY PIPE 1¼"Ø OR SMALLER	6	10
COPPER OR COPPER ALLOY PIPE 1½"Ø OR LARGER	10	10
PEX	2.67	10
CPVC 1" OR SMALLER	3	10
CPVC 1-1/4" OR LARGER	4	10
STEEL PIPE	12	15
POLYETHYLENE /ALUMINUM/ POLYETHYLENE	2.67	4
PVC PIPE	4	10
STAINLESS STEEL DRAINAGE	10	10

HANGER ROD SCHEDULE

PIPE SIZE	ROD SIZE	PIPE SIZE	ROD SIZE
UP TO 2"	3/8" DIA.	4" THRU 5"	5/8" DIA.
2 1/2" THRU 3"	1/2" DIA		

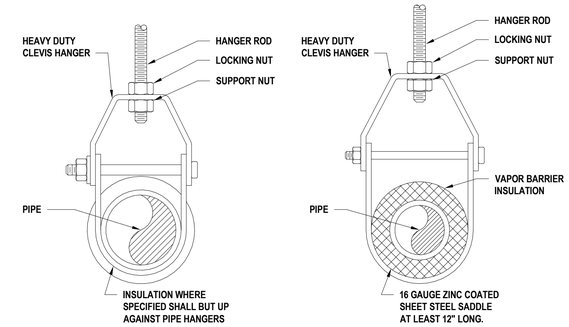

2 Pipe Hanger Detail

SCALE: NTS

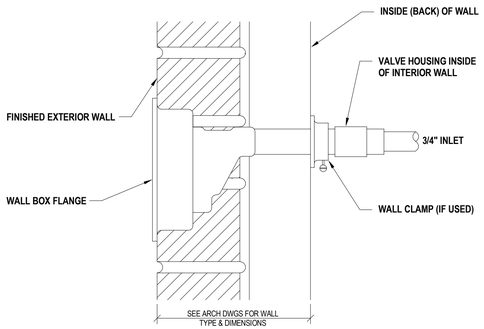

3 Freeze Proof Wall Hydrant Detail

SCALE: NTS

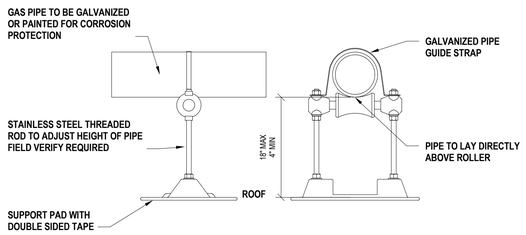

SUPPORT OF GAS PIPING

SIZE OF PIPE (IN.)	SPACING OF SUPPORTS (FT.)
1/2	6
3/4 OR 1	8
1-1/4 OR LARGER	10

4 Roof Pipe Support Detail

SCALE: NTS

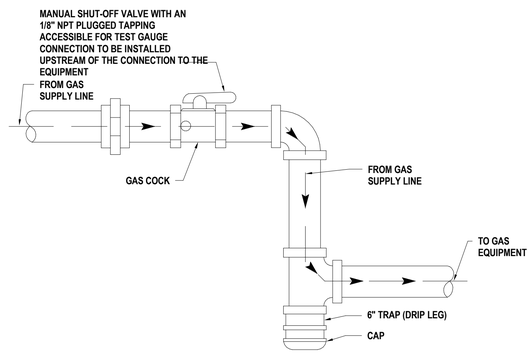

5 Typical Gas Connection Detail

SCALE: NTS

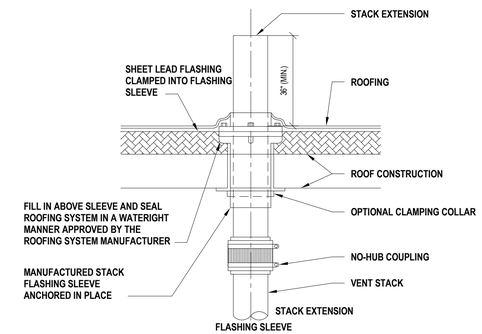

NOTES:

1. FINAL VENT STACK OUTLET LOCATION TO BE 15 FEET (MIN.) AWAY FROM ANY OUTSIDE VENTILATION AIR INTAKE LOCATION, 10 FEET (MIN.) FROM ANY WALL OR STRUCTURE AND 3 (MIN.) FEET ABOVE STRUCTURE.

6 Vent Through Roof

SCALE: NTS

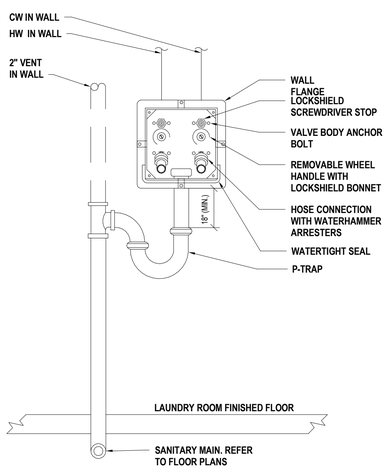

7 Washing Machine Supply And Drain Box

SCALE: NTS

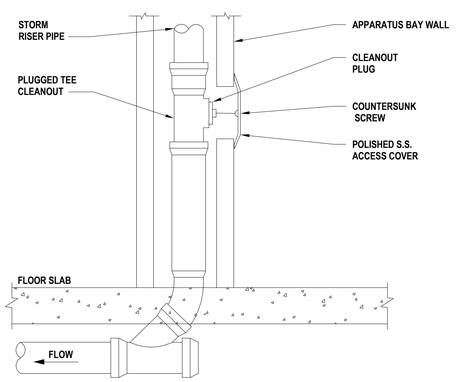

8 Wall Cleanout - Apparatus Bay Detail

SCALE: NTS

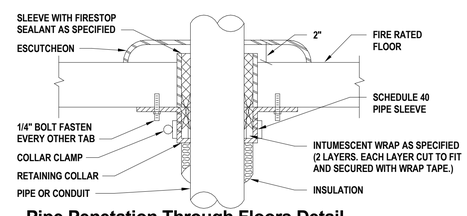

9 Pipe Penetation Through Floors Detail

SCALE: NTS

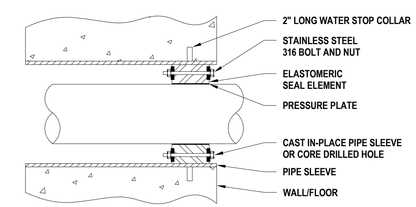

10 Link-Seal Pipe Penetration Detail

SCALE: NTS

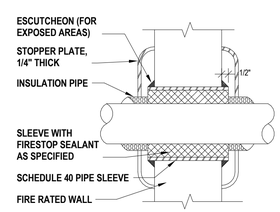

FIRE STOPPING NOTES:

1. CONTRACTOR SHALL BE RESPONSIBLE FOR ENSURING THAT PENETRATIONS ARE PROPERLY FIRE STOPPED WITH THE FOLLOWING:

1.A. THE FIRE STOPPING SYSTEM AND COMPONENTS SHALL BE AS MANUFACTURED BY 3M. NO SUBSTITUTIONS SHALL BE PERMITTED.

1.B. METAL PIPES OR CONDUIT THROUGH BLOCK WALL SHALL USE UL SYSTEM NO. CAJ1044 AND 3M PRODUCT CP25 WB & CAULK

1.C. METAL PIPES THROUGH GYPSUM WALLS SHALL USE UL SYSTEM NO. WL 1001 AND 3M PRODUCT CP 25 WB & CAULK

11 Pipe Penetrations Through Fire Rated Walls

SCALE: NTS

H2M architects + engineers

538 Broad Hollow Road, 4th Floor East
Melville, NY 11747
631.756.8000 • www.h2m.com

CONSULTANTS:

MARK	DATE	DESCRIPTION

STATE OF NEW YORK · JONATHAN RICHARD HUNT SHE · 096440-1 · LICENSED PROFESSIONAL ENGINEER

"ALTERATION OF THIS DOCUMENT EXCEPT BY A LICENSED PROFESSIONAL IS ILLEGAL"

DESIGNED BY:	DRAWN BY:	CHECKED BY:	REVIEWED BY:
JRM	KJE		

PROJECT No:	DATE:	SCALE:
VGFD2001	JULY 2022	AS SHOWN

CLIENT

VAILS GATE FIRE DISTRICT

New Storage Building (Phase I)
New Fire Station (Phase II)

872 Blooming Grove Turnpike
New Windsor, NY 12553

CONTRACT

CONTRACT G
GENERAL CONSTRUCTION

STATUS

FINAL BID DOCUMENT

SHEET TITLE

PLUMBING DETAILS

DRAWING No.

P2 500.00

C:\Users\kescarraman\Documents\VGFD2001-Central21-P_kescarraman.rvt

7/18/2022 8:12:51 AM

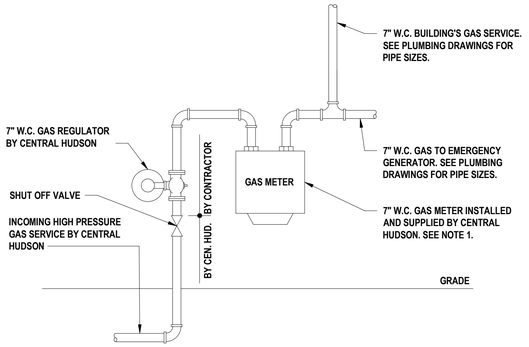

NOTES:

GAS METER RIG SHALL BE CONSTRUCTED IN ACCORDANCE WITH ALL REQUIREMENTS OF CENTRAL HUDSON INCLUDING, BUT NOT LIMITING TO; DIMENSIONS, PIPING, FITTINGS, CONNECTIONS, VALVE, CONCRETE PADS, AND BOLLARDS.

1 Gas Meter With Gas Fired Emergency Generator Detail

SCALE: NTS

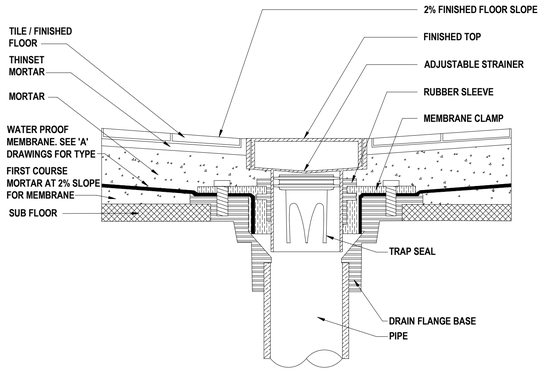

2 Floor Drain Detail

SCALE: NTS

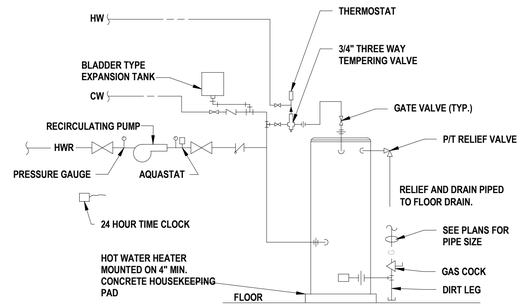

3 Domestic Hot Water Heater Piping With HWR Detail

SCALE: NTS

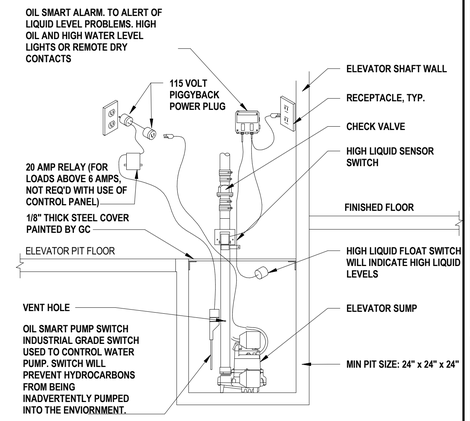

4 Elevator Oil Smart Pump Detail

SCALE: NTS

H2M architects + engineers

538 Broad Hollow Road, 4th Floor East
Melville, NY 11747
631.756.8000 • www.h2m.com

CONSULTANTS:

MARK	DATE	DESCRIPTION

STATE OF NEW YORK · JONATHAN RICHARD JUSTICE · 096440-1 · LICENSED PROFESSIONAL ENGINEER

"ALTERATION OF THIS DOCUMENT EXCEPT BY A LICENSED PROFESSIONAL IS ILLEGAL"

DESIGNED BY:	DRAWN BY:	CHECKED BY:	REVIEWED BY:
JRM	KJE		

PROJECT No:	DATE:	SCALE:
VGFD2001	JULY 2022	AS SHOWN

CLIENT

VAILS GATE FIRE DISTRICT

New Storage Building (Phase I)
New Fire Station (Phase II)

872 Blooming Grove Turnpike
New Windsor, NY 12553

CONTRACT

CONTRACT G
GENERAL CONSTRUCTION

STATUS

FINAL BID DOCUMENT

SHEET TITLE

PLUMBING
PLUMBING DETAILS II

DRAWING No.

P2 501.00

C:\Users\kescarraman\Documents\VGFD2001-Central21-P_Kescarraman.rvt
7/18/2022 8:12:51 AM

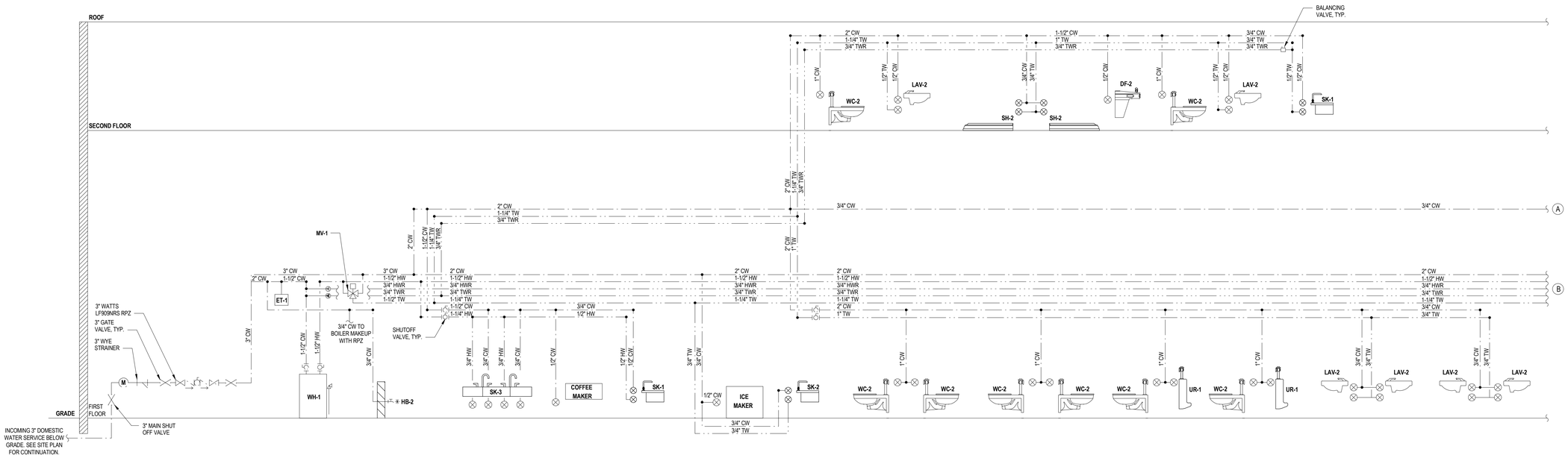

1 **Domestic Riser Diagram (1 of 2)**
SCALE: NTS

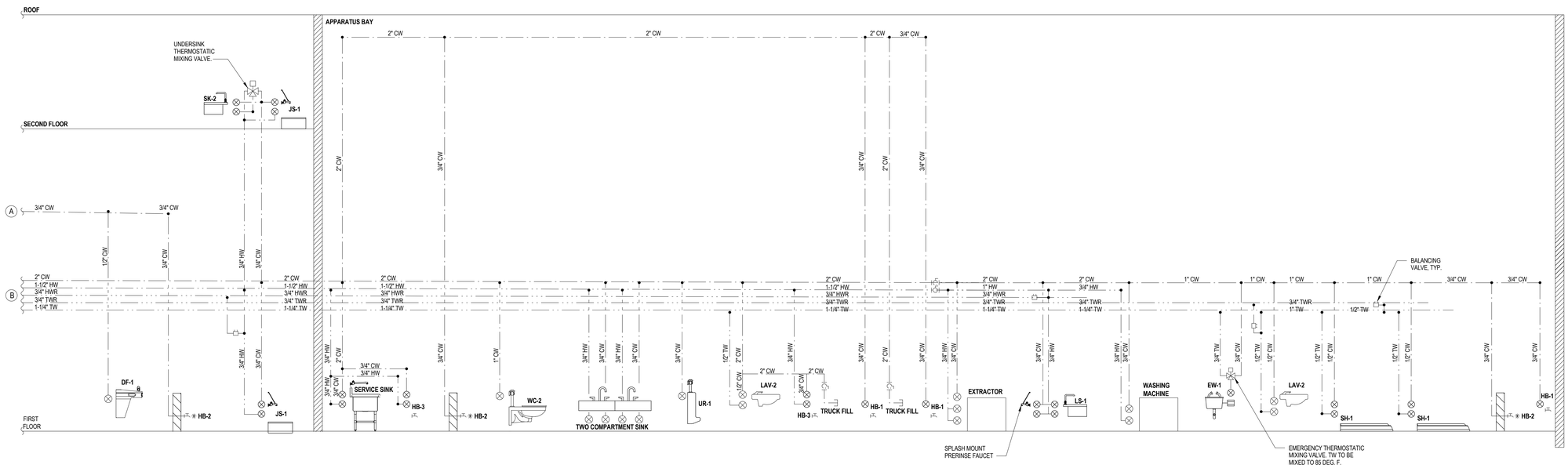

2 **Domestic Riser Diagram (2 of 2)**
SCALE: NTS

C:\Users\kescarraman\Documents\VGFD2001-Central21-P_Kescarraman.rvt

7/18/2022 8:12:51 AM

H2M architects + engineers
538 Broad Hollow Road, 4th Floor East
Melville, NY 11747
631.756.8000 • www.h2m.com

CONSULTANTS:

MARK	DATE	DESCRIPTION

STATE OF NEW YORK · JONATHAN RICHARD JUSTICE · 096440-1 · LICENSED PROFESSIONAL ENGINEER

"ALTERATION OF THIS DOCUMENT EXCEPT BY A LICENSED PROFESSIONAL IS ILLEGAL"

DESIGNED BY:	DRAWN BY:	CHECKED BY:	REVIEWED BY:
JRM	KJE		
PROJECT No: VGFD2001	DATE: JULY 2022		SCALE: AS SHOWN

CLIENT
VAILS GATE FIRE DISTRICT

New Storage Building (Phase I)
New Fire Station (Phase II)

872 Blooming Grove Turnpike
New Windsor, NY 12553

CONTRACT
CONTRACT G
GENERAL CONSTRUCTION

STATUS
FINAL BID DOCUMENT

SHEET TITLE
PLUMBING
DOMESTIC RISER DIAGRAMS
NEW FIRE HOUSE
PHASE 2

DRAWING No.
P2 600.00

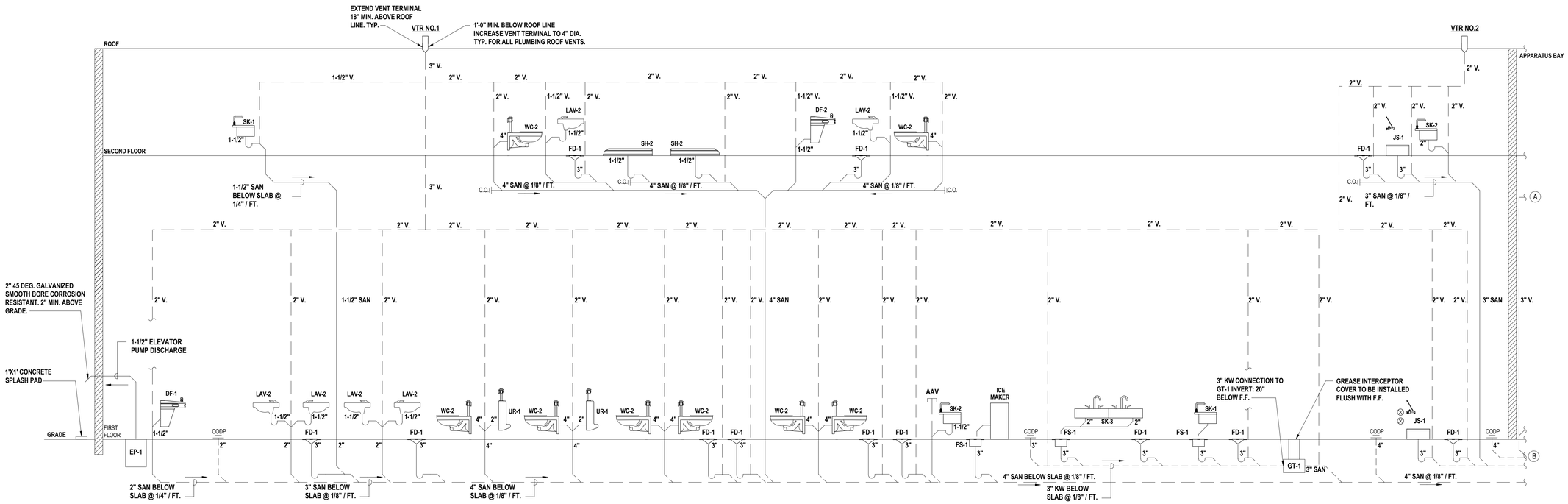

1 **Sanitary and Vent Riser Diagram (1 of 2)**
SCALE: NTS

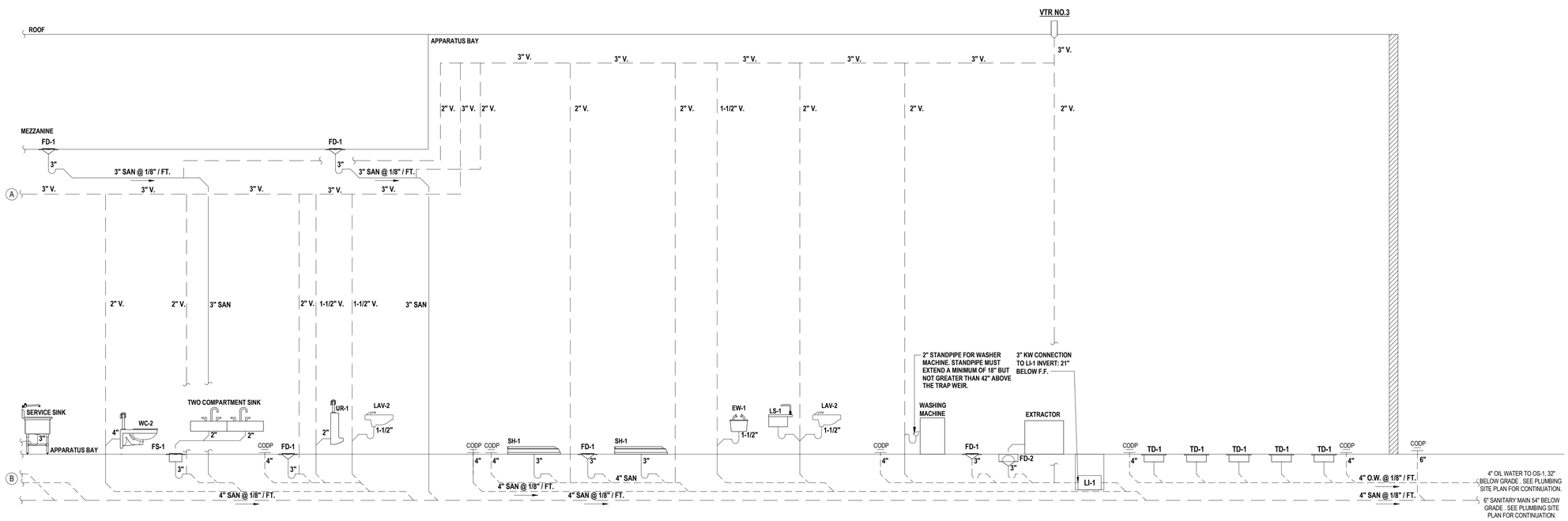

2 **Sanitary and Vent Riser Diagram (2 of 2)**
SCALE: NTS

C:\Users\kescarraman\Documents\VGFD2001-Central2-LP_Kescarraman.rvt

7/18/2022 8:12:52 AM

H 2 M architects + engineers

538 Broad Hollow Road, 4th Floor East
Melville, NY 11747
631.756.8000 • www.h2m.com

CONSULTANTS:

MARK	DATE	DESCRIPTION

STATE OF NEW YORK · JONATHAN RICHARD HUNT STONE · 096440-1 · LICENSED PROFESSIONAL ENGINEER

"ALTERATION OF THIS DOCUMENT EXCEPT BY A LICENSED PROFESSIONAL IS ILLEGAL"

DESIGNED BY:	DRAWN BY:	CHECKED BY:	REVIEWED BY:
Designer	Author		

PROJECT No:	DATE:	SCALE:
VGFD2001	JULY 2022	AS SHOWN

CLIENT

VAILS GATE FIRE DISTRICT

New Storage Building (Phase I)
New Fire Station (Phase II)

872 Blooming Grove Turnpike
New Windsor, NY 12553

CONTRACT

CONTRACT P
PLUMBING CONSTRUCTION

STATUS

FINAL BID DOCUMENT

SHEET TITLE

PLUMBING
SANITARY AND VENT RISER
DIAGRAM
BUILDING

DRAWING No.

P2 601.00

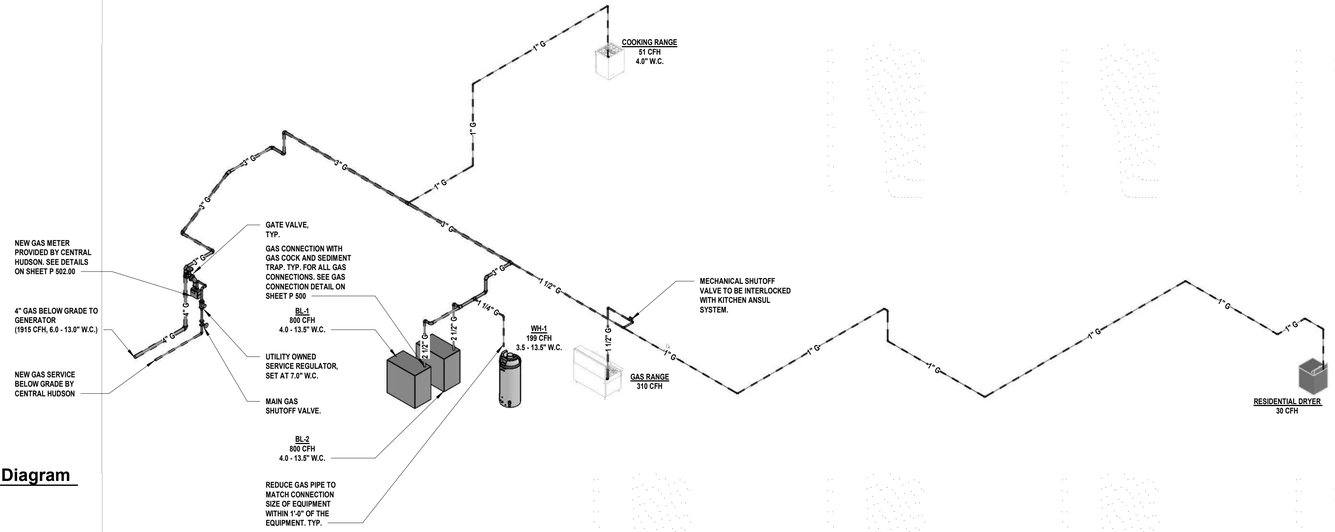

1 **Gas Isometric Riser Diagram**
SCALE: NTS

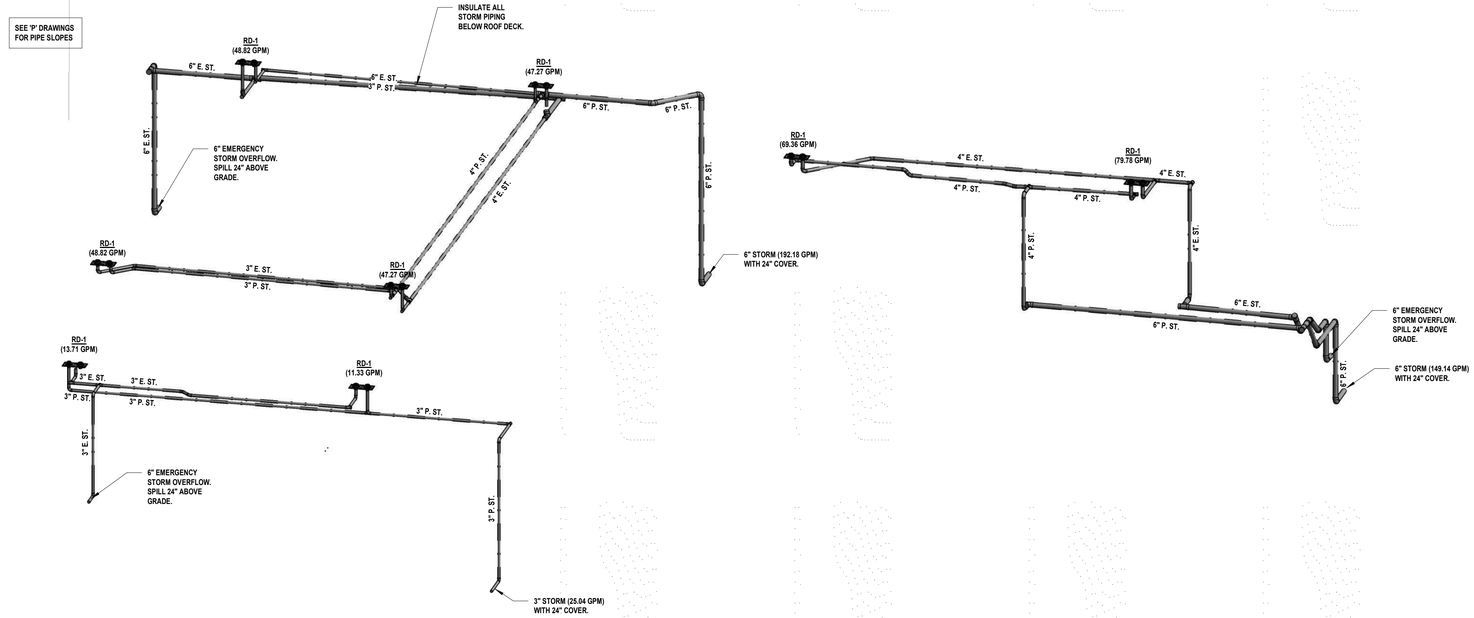

2 **Storm Isometric Riser Diagram**
SCALE: NTS

C:\Users\kescarraman\Documents\VGFD2001-Central21-P_Kescarraman.rvt

7/18/2022 8:13:07 AM

H2M architects + engineers

538 Broad Hollow Road, 4th Floor East
Melville, NY 11747
631.756.8000 • www.h2m.com

CONSULTANTS:

MARK	DATE	DESCRIPTION

STATE OF NEW YORK
JONATHAN RICHARD MURATORE
096440-1
LICENSED PROFESSIONAL ENGINEER

"ALTERATION OF THIS DOCUMENT EXCEPT BY A LICENSED PROFESSIONAL IS ILLEGAL."

DESIGNED BY:	DRAWN BY:	CHECKED BY:	REVIEWED BY:
JRM	KJE		
PROJECT No:	DATE:	SCALE:	
VGFD2001	JULY 2022	AS SHOWN	

CLIENT
VAILS GATE FIRE DISTRICT

New Storage Building (Phase I)
New Fire Station (Phase II)

872 Blooming Grove Turnpike
New Windsor, NY 12553

CONTRACT
CONTRACT P
PLUMBING CONSTRUCTION

STATUS
FINAL BID DOCUMENT

SHEET TITLE
GAS AND STORM ISOMETRIC RISER DIAGRAMS
NEW FIRE HOUSE
PHASE 2

DRAWING No.
P2 602.00

ABBREVIATIONS

AFF	ABOVE FINISHED FLOOR
BCU	BUILDING CONTROL UNIT
BTU	BRITISH THERMAL UNIT
CFH	CUBIC FEET PER HOUR
CFM	CUBIC FEET PER MINUTE
CLG	CEILING
COMM.	COMMUNICATION
CV	CONTROL VALVE
(D)	DEMOLISH
DB	DRY BULB
DCV	DEMAND CONTROLLED VENTILATION
DEG. F	DEGREES FAHRENHEIT
DIA	DIAMETER
DX	DIRECT EXPANSION
'E'	ELECTRICAL CONTRACTOR
(E)	EXISTING
EA	EACH
EAT	ENTERING AIR TEMPERATURE
EER	ENERGY EFFICIENCY RATING
ESP	EXTERNAL STATIC PRESSURE
FAI	FRESH AIR INTAKE
FD	FLOOR DRAIN
FLA	FULL LOAD AMPS
FT. H20	FEET OF WATER
'G'	GENERAL CONSTRUCTION CONTRACTOR
GPM	GALLONS PER MINUTE
GPH	GALLONS PER HOUR
H	HEIGHT
'H'	HVAC CONTRACTOR
HP	HORSEPOWER
IN.	INCHES
IN. W.C. (W.G.)	INCHES WATER COLUMN (WATER GAUGE)
KW	KILOWATTS
L	LENGTH
LAT	LEAVING AIR TEMPERATURE
LBS	POUNDS
LCD	LIQUID CRYSTAL DISPLAY
LDB	LEAVING DRY BULB TEMPERATURE
LWB	LEAVING WET BULB TEMPERATURE
LWT	LEAVING WATER TEMPERATURE
M	METER
MAX	MAXIMUM
MBH	1,000 BTU PER HOUR
MCA	MINIMUM CIRCUIT AMPACITY
MIN	MINIMUM
MNF	MANUFACTURER
N.C.	NORMALLY CLOSED
N.O.	NORMALLY OPEN
NFPA	NATIONAL FIRE PROTECTION ASSOCIATION
NPT	NATIONAL PIPE THREAD
NTS	NOT TO SCALE
OAI	OUTDOOR AIR INTAKE
OD	OUTER DIAMETER
OED	OPEN ENDED DUCT
'P'	PLUMBING CONTRACTOR
PD	PRESSURE DROP
PSIG	LBS / SQUARE INCH (GAUGE PRESSURE)
RD	ROOF DRAIN
RPM	REVOLUTIONS PER MINUTE
RPZ	REDUCED PRESSURE ZONE
SAT	SUPPLY AIR TEMPERATURE
SEER	SEASONAL ENERGY EFFICIENCY RATING
TEMP	TEMPERATURE
TG	TRANSFER GRILLE
TYP	TYPICAL
VFD	VARIABLE FREQUENCY DRIVE
W	WIDTH
WB	WET BULB
WMS	WIRE MESH SCREEN

DUCTWORK LEGEND

SYMBOL	ABBREV	DESCRIPTION
		DUCTWORK BRANCH CONNECTION
	VD	VOLUME DAMPER
	CD	ROUND FACE SUPPLY DIFFUSER
	SEE AIR DEVICE SCHEDULE	SIDEWALL SUPPLY, RETURN OR EXHAUST GRILLE/REGISTER
	SEE AIR DEVICE SCHEDULE	SQUARE FACE SUPPLY DIFFUSER
	SEE AIR DEVICE SCHEDULE	BOTTOM RETURN OR EXHAUST GRILLE/REGISTER
	FC	FLEXIBLE CONNECTION
		TURNING VANES
		RECTANGULAR TO ROUND TRANSITION
	AL	ACOUSTICAL LINING
		END CAP
	SEE AIR DEVICE SCHEDULE	SUPPLY DIFFUSER WITH DIRECTIONAL FLOW (SOLID HATCH INDICATES BLANK OFF PANEL)
		SUPPLY DUCT DROP (TURN DOWN)
		RETURN/EXHAUST DUCT DROP (TURN DOWN)
		SUPPLY DUCT RISE
		RETURN/EXHAUST DUCT RISE
DSD	DSD	DUCT SMOKE DETECTOR
M	MD	MOTORIZED DAMPER WITH ACTUATOR
OR	AD	ACCESS DOOR
	FD/AD	FIRE DAMPER WITH ACCESS DOOR
	FSD/AD	FIRE SMOKE DAMPER WITH ACCESS DOOR
		FAN
		WORK TO BE REMOVED
		POINT OF DISCONNECTION FROM EXISTING
		POINT OF CONNECTION TO EXISTING

CONTROLS LEGEND

SYMBOL	ABBREV	DESCRIPTION
C		CARBON MONOXIDE SENSOR
T		THERMOSTAT
S		DIGITAL TEMPERATURE SENSOR
C2		CARBON DIOXIDE SENSOR

PIPING LEGEND

SYMBOL	ABBREV	DESCRIPTION
		NEW WORK
		PIPING DOWN/ PIPING UP
		BALL VALVE WITH HOSE END CONNECTION
	TH	THERMOMETER
	U	UNION
	FPC	FLEXIBLE PIPE CONNECTION
		DIRECTION OF FLOW
	PSR	PRESSURE SAFETY AND RELIEF VALVE
	PRV	PRESSURE REDUCING VALVE
	BV	BALL VALVE
	BA	BALANCING VALVE
	BFV	BUTTERFLY VALVE
		TEMPERATURE SENSOR WITH THERMOWELL
	GA	GATE VALVE
	GB	GLOBE VALVE
	AV	AUTOMATIC AIR VENT
	CV	2-WAY ELECTRONIC CONTROL VALVE
	CV	3-WAY ELECTRONIC CONTROL VALVE
	CV	2-WAY PNEUMATIC CONTROL VALVE
	CV	3-WAY PNEUMATIC CONTROL VALVE
	STR	STRAINER WITH BLOW OFF VALVE WITH HOSE END CONNECTION
	FD	FLOOR DRAIN
S		AIR SEPARATOR
F&T		STEAM TRAPS (INDICATE TYPE)
	CH	CHECK VALVE
	PG	PRESSURE GAUGE WITH GAUGE COCK
	RED	REDUCER
	CO	CLEANOUT END CAP
		PIPE GUIDE
		PIPE ANCHOR
		CAPPED PIPE
		PUMP
		WORK TO BE REMOVED
		POINT OF DISCONNECTION FROM EXISTING
		POINT OF CONNECTION TO EXISTING
	TDV	TRIPLE DUTY VALVE

BMS NOTES:

PROVIDE MATERIALS AND LABOR TO PROVIDE A BMS SYSTEM FOR ALL NEW EQUIPMENT ASSOCIATE WITH THIS PROJECT. SYSTEM SHALL BE WEB BASED USER INTERFACE. BMS SYSTEM SHALL INCLUDE ABILITY FOR COMMAND ENTRY, INFORMATION MANAGEMENT, NETWORK ALARM MANAGEMENT, AND DATABASE MANAGEMENT FUNCTIONS. A REAL TIME CONTROLS FUNCTION, INCLUDING SCHEDULING, HISTORY COLLECTION AND ALARMING SHALL BE RESIDENT IN THE BMS NETWORK. SYSTEM COMMUNICATIONS SHALL BE BACNET ANSI/ASHRAE STANDARD 135-2016 AT ALL LEVELS OF THE ARCHITECTURE. THE BMS SHALL USE AN OPEN ARCHITECTURE AND FULLY SUPPORT A MULTI-VENDOR ENVIRONMENT.

GENERAL NOTES

1. PROVIDE ALL MATERIALS AND EQUIPMENT AND PERFORM ALL LABOR REQUIRED TO INSTALL COMPLETE AND OPERABLE MECHANICAL SYSTEMS AS INDICATED ON THE DRAWINGS, AS SPECIFIED AND AS REQUIRED BY CODE.
2. THE CONTRACTOR, BY PRESENTING THEIR BID FOR THE WORK, REPRESENTS THAT HE/SHE HAS INSPECTED THE SITE AND IS COMPLETELY FAMILIAR WITH THE SCOPE OF WORK AND ALL FIELD CONDITIONS RELATED TO, AND AFFECTING THE WORK AND ITS PERFORMANCE. EXCEPTIONS AFFECTING THE WORK AND ITS PERFORMANCE, OR CONFLICTS BETWEEN FIELD CONDITIONS, SHALL BE BROUGHT TO THE ATTENTION OF THE ARCHITECT PRIOR TO THE SUBMISSION OF BIDS.
3. PERFORM ALL WORK IN ACCORDANCE WITH THE PLUMBING CODE, FIRE CODE, MECHANICAL CODE, ENERGY CONSERVATION CONSTRUCTION CODE, AND FUEL GAS CODE OF NEW YORK STATE AND THE REQUIREMENTS OF THE LOCAL AUTHORITIES HAVING JURISDICTION.
4. COMPLY WITH THE NATIONAL ELECTRIC CODE AND THE REQUIREMENTS OF DIVISION 26 FOR ALL ELECTRICAL INSTALLATIONS.
5. FIRE STOP ALL OPENINGS IN FIRE RATED CONSTRUCTION FOR PIPING, DUCTWORK, CONDUIT, ETC. PROVIDE FIRE DAMPERS AND ACCESS DOORS IN ALL OPENINGS IN FIRE RATED FLOORS, PARTITIONS, AND WALLS FOR DUCTWORK AS PER THE MECHANICAL CODE OF NEW YORK STATE. (SEE ARCHITECTURAL DRAWINGS FOR LOCATIONS OF FIRE RATED CONSTRUCTION.)
6. DO NOT SCALE DRAWINGS. DRAWINGS FOR HVAC WORK ARE DIAGRAMMATIC AND ARE INTENDED TO CONVEY SCOPE AND GENERAL ARRANGEMENT ONLY. THE LOCATIONS OF ALL ITEMS SHOWN ON THE DRAWINGS OR CALLED FOR IN THE SPECIFICATIONS THAT ARE NOT DEFINITELY FIXED BY DIMENSIONS ARE APPROXIMATE. COORDINATE CONTRACT DOCUMENTS, PROJECT REQUIREMENTS, WORK OF OTHERS, AND EQUIPMENT AND MATERIALS PURCHASED WITH FIELD DIMENSIONS. INSTALL ALL EQUIPMENT AS PER MANUFACTURER'S REQUIREMENTS TO PROVIDE PROPER CLEARANCE FOR INSTALLATION, OPERATION, AND MAINTENANCE. CONTRACTOR'S INTENDED MEANS AND METHODS OF INSTALLATION AND CONTRACTOR'S FABRICATED ITEMS SHALL ENSURE A PROPER "FIT" AND INSTALLATION. BRING ANY CONFLICTS TO THE ATTENTION OF THE ARCHITECT/ENGINEER DURING THE SUBMITTAL PHASE FOR RESOLUTION PRIOR TO PURCHASING ANY EQUIPMENT.
7. MAINTAIN MAXIMUM HEADROOM AND SPACE CONDITIONS AT ALL POINTS. WHERE HEADROOM AND SPACE CONDITIONS APPEAR INADEQUATE, NOTIFY THE ARCHITECT/ENGINEER PRIOR TO PROCEEDING WITH INSTALLATION. MAINTAIN A MINIMUM OF 6'-8" CLEARANCE FROM FINISHED FLOOR TO UNDERSIDE OF PIPES, DUCTS, CONDUITS, SUSPENDED EQUIPMENT, ETC., THROUGHOUT ACCESS ROUTES IN MECHANICAL ROOMS.
8. FIELD VERIFY AND COORDINATE ALL DUCT AND PIPING DIMENSIONS BEFORE FABRICATION. MAKE MODIFICATIONS IN THE LAYOUT AS NEEDED TO PREVENT CONFLICT WITH WORK OF OTHER TRADES OR FOR PROPER EXECUTION OF THE WORK. OBTAIN THE APPROVAL OF THE ARCHITECT/ENGINEER FOR MODIFICATIONS.
9. PROVIDE PRODUCTS OF ONE MANUFACTURER WHERE TWO OR MORE ITEMS OF THE SAME TYPE OF MATERIAL OR EQUIPMENT IS REQUIRED.
10. INSTALL ALL EQUIPMENT AND APPURTENANCES IN ACCORDANCE WITH MANUFACTURER'S RECOMMENDATIONS, CONTRACT DOCUMENTS, AND APPLICABLE CODES AND REGULATIONS. REFER TO DETAILS FOR ADDITIONAL PIPING AND EQUIPMENT INSTALLATION REQUIREMENTS.
11. LOCATE ALL TEMPERATURE, PRESSURE, AND FLOW MEASURING DEVICES IN ACCESSIBLE LOCATIONS WITH STRAIGHT SECTION OF PIPE OR DUCT UP- AND DOWNSTREAM AS RECOMMENDED BY THE MANUFACTURER TO ENSURE MANUFACTURER CERTIFIED ACCURACY.
12. COORDINATE ALL EQUIPMENT CONNECTIONS WITH MANUFACTURER'S CERTIFIED DRAWINGS. COORDINATE AND PROVIDE ALL PIPING AND DUCT TRANSITIONS REQUIRED FOR FINAL CONNECTIONS TO EQUIPMENT.
13. COORDINATE LOCATIONS AND SIZES OF ALL FLOOR, WALL, AND ROOF OPENINGS WITH ALL OTHER TRADES. COORDINATE ALL PIPING AND EQUIPMENT SUPPORTED FROM STRUCTURE WITH GENERAL CONSTRUCTION WORK.
14. COORDINATE INSTALLATION OF SUPPLY AND RETURN GRILLES WITH INSTALLATION OF FINISHED CEILINGS.
15. COMPLETE ALL PRESSURE TESTS BEFORE ANY MECHANICAL EQUIPMENT, DUCTWORK, OR PIPING INSULATION IS APPLIED.
16. TESTING, ADJUSTING, AND BALANCING AGENCY SHALL BE A MEMBER OF THE ASSOCIATED AIR BALANCE COUNCIL (AABC) OR THE NATIONAL ENVIRONMENTAL BALANCING BUREAU (NEBB). PERFORM ALL TESTING, ADJUSTING, AND BALANCING IN ACCORDANCE WITH THE SPECIFICATIONS.
17. MAKE ALL ATTACHMENTS TO JOISTS, TRUSSES, OR JOIST GIRDERS AT PANEL POINTS. PROVIDE BEAM CLAMPS MEETING MSS STANDARDS. THE USE OF C-CLAMPS IS NOT PERMITTED.
18. PROVIDE CONCRETE PADS FOR ALL FLOOR MOUNTED EQUIPMENT. EXTEND PAD 6 INCHES BEYOND THE EQUIPMENT ON ALL SIDES.
19. LINE ALL SUPPLY AND RETURN DUCTWORK WITHIN 20 FEET UPSTREAM AND DOWNSTREAM OF FANS WITH 1" THICK INSULATION. SEE DRAWINGS AND SPECIFICATIONS FOR ADDITIONAL REQUIREMENTS.
20. PROVIDE TRAPPED DRAIN PIPING FROM DRAIN PANS OF ALL COOLING COILS, FANS, AND OTHER ACTIVE DRAINS EXPOSED TO SYSTEM AIR STREAM. PROVIDE TRAP AT CONNECTION, WATER SEAL DEPTH 1 INCH GREATER THAN UNIT OPERATING PRESSURE. DIRECT DRAINS TO NEAREST FLOOR DRAIN, MOP SINK, OR OTHER LOCATION APPROVED BY THE ARCHITECT/ENGINEER.
21. INSTALL PIPING, DUCTWORK, AND CONDUIT CONCEALED IN AREAS HAVING HUNG CEILINGS AND/OR FURRED SPACES UNLESS OTHERWISE INDICATED ON THE DRAWINGS.

SCOPE NOTES

1. SUBMIT LOUVER COLOR AND CONFIGURATION TO THE ARCHITECT/ENGINEER FOR APPROVAL.
2. INSTALL SMOKE DETECTORS IN DUCTWORK FOR AIR HANDLING UNITS RATED AT 2,000 CFM OR GREATER.
3. FURNISH AND INSTALL ALL NECESSARY CONTROL WIRING, CONDUIT, AND ACCESSORIES AS REQUIRED TO PROVIDE FULLY FUNCTIONING SYSTEMS AND SEQUENCES OF OPERATION.
4. REMOVE CHASE ENCLOSURE COVER WHEN PERFORMING WORK IN ANY CHASE, AND REINSTALL THE CHASE ENCLOSURE COVER WHEN WORK IS COMPLETE.
5. PERFORM ALL CUTTING AND ROUGH PATCHING AS REQUIRED IN THE EXECUTION OF THE WORK.

LEGENDS/ABBREVIATIONS NOTES

1. ABBREVIATIONS AND SYMBOLS ON THIS SHEET DO NOT DEFINE THE SCOPE OF WORK.

H2M architects + engineers

538 Broad Hollow Road, 4th Floor East
Melville, NY 11747
631.756.8000 • www.h2m.com

CONSULTANTS:

MARK	DATE	DESCRIPTION

STATE OF NEW YORK · JOHN LAHEY · 101303 · LICENSED PROFESSIONAL ENGINEER

DESIGNED BY:	DRAWN BY:	CHECKED BY:	REVIEWED BY:
DKR	DKR	MJV	JML
PROJECT No.: VGFD2001	DATE: JULY 2022	SCALE: AS SHOWN	

CLIENT

VAILS GATE FIRE DISTRICT

New Storage Building (Phase I)
New Fire Station (Phase II)

872 Blooming Grove Turnpike
New Windsor, NY 12553

CONTRACT

CONTRACT G
GENERAL CONSTRUCTION

STATUS

FINAL BID DOCUMENT

SHEET TITLE

HVAC LEGENDS, SYMBOLS, ABBREVIATIONS, AND GENERAL NOTES

DRAWING No.

M2 001.00

X:\VGFD\Vails Gate Fire Dept\VGFD2001-Vails Gate FD-New Firehouse\02-BIM-CADD\Cnc-docs\hvac\M2-001.00 - Mechanical Cover Sheet.dwg Last Modified: Jul 13, 2022 - 8:16pm Plotted on: Jul 15, 2022 - 12:59pm By dragone

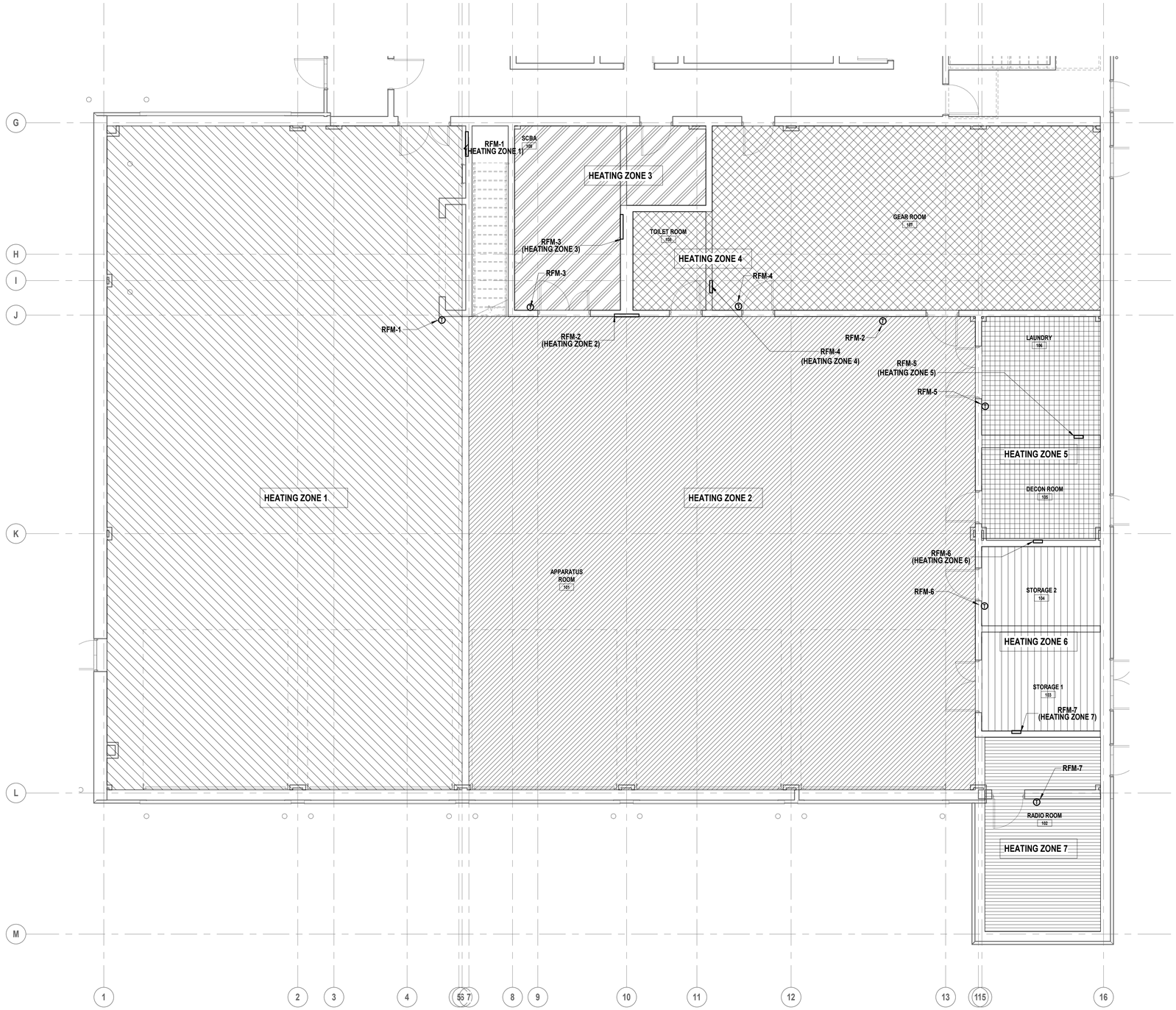

1 **Slab HVAC Piping Plan**
SCALE: 3/16" = 1'-0"

RADIANT FLOOR ZONE LEGEND:

= ZONE 1, CONTAINS RADIANT FLOOR PIPING WITH 10 CIRCUITS TO MANIFOLD RFM-1.

= ZONE 2, CONTAINS RADIANT FLOOR PIPING WITH 10 CIRCUITS TO MANIFOLD RFM-2.

= ZONE 3, CONTAINS RADIANT FLOOR PIPING WITH 2 CIRCUITS TO MANIFOLD RFM-3.

= ZONE 4, CONTAINS RADIANT FLOOR PIPING WITH 4 CIRCUITS TO MANIFOLD RFM-4.

= ZONE 5, CONTAINS RADIANT FLOOR PIPING WITH 2 CIRCUITS TO MANIFOLD RFM-5.

= ZONE 6, CONTAINS RADIANT FLOOR PIPING WITH 2 CIRCUITS TO MANIFOLD RFM-6.

= ZONE 7, CONTAINS RADIANT FLOOR PIPING WITH 2 CIRCUITS TO MANIFOLD RFM-7.

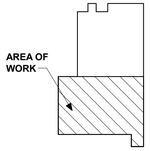

Key Plan
SCALE: N.T.S.

H2M architects + engineers
538 Broad Hollow Road, 4th Floor East
Melville, NY 11747
631.756.8000 • www.h2m.com

CONSULTANTS:

MARK	DATE	DESCRIPTION

STATE OF NEW YORK · JOHN LAHEY · 101303 · LICENSED PROFESSIONAL ENGINEER

PROFESSIONAL IS LICENSED

DESIGNED BY:	DRAWN BY:	CHECKED BY:	REVIEWED BY:
DKR	DKR	MJV	JML
PROJECT No: VGFD2001	DATE: JULY 2022		SCALE: AS SHOWN

CLIENT
VAILS GATE FIRE DISTRICT

New Storage Building (Phase I)
New Fire Station (Phase II)

872 Blooming Grove Turnpike
New Windsor, NY 12553

CONTRACT
CONTRACT G
GENERAL CONSTRUCTION

STATUS
FINAL BID DOCUMENT

SHEET TITLE
SLAB HVAC PIPING PLAN AREA A

DRAWING No.
M2 100A.00

C:\Users\dragone\Documents\VGFD2001-Central21-H_dragone.rvt

7/15/2022 12:54:24 PM

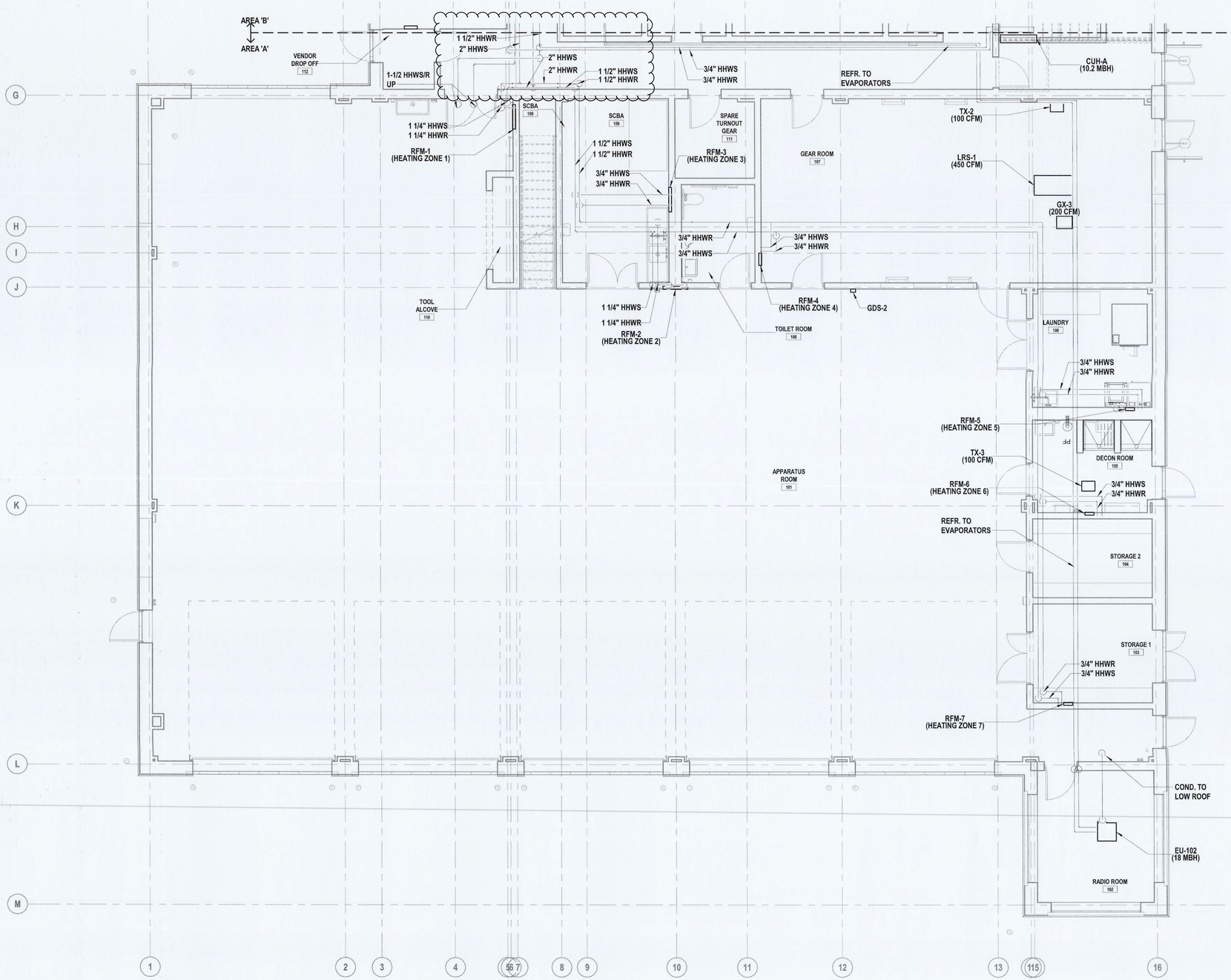

1 First Floor HVAC Piping Plan
SCALE: 3/16" = 1'-0"

GENRAL NOTES:

1. REFRIGERANT PIPING IS SCHEMATIC, COORDINATE REFRIGERANT PIPE SIZE WITH MANUFACTURER. PROVIDE PIPING SHOP DRAWING FROM MANUFACTURER FOR REVIEW.
2. ROUTE CONDENSATE PIPING TO NEAREST JANITORS SINK OR ROUTE TO FLOOR DRAIN AS SHOWN. ALL COND. PIPING NOT CONNECTED TO CONDENSATE PUMP (TAGGED AS CDP) TO BE SLOPED DOWN 1/8" -1'-0" MINIMUM TOWARDS DRAIN.
3. SEE DETAILS FOR ISOLATION VALVE REQUIREMENTS.
4. REFER TO SEISMIC RESTRAINT SCHEDULE FOR PIPING REQUIRING SEISMIC SUPPORTS.

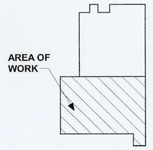

Key Plan
SCALE: N.T.S.

H2M architects + engineers
538 Broad Hollow Road, 4th Floor East
Melville, NY 11747
631.756.8000 • www.h2m.com

CONSULTANTS:

MARK	DATE	DESCRIPTION
2	12/22/2022	REVS. PER TOWN COMMENT

STATE OF NEW YORK · JOHN LAVEY · LICENSED PROFESSIONAL ENGINEER

"ALTERATION OF THIS DOCUMENT EXCEPT BY A LICENSED PROFESSIONAL IS ILLEGAL."

DESIGNED BY:	DRAWN BY:	CHECKED BY:	REVIEWED BY:
DKR	DKR		
PROJECT No: VGFD2001	DATE: JULY 2022	SCALE: AS SHOWN	

CLIENT
VAILS GATE FIRE DISTRICT

New Storage Building (Phase I)
New Fire Station (Phase II)

872 Blooming Grove Turnpike
New Windsor, NY 12553

CONTRACT
CONTRACT G
GENERAL CONSTRUCTION

STATUS
FINAL BID DOCUMENT

SHEET TITLE
FIRST FLOOR HVAC PIPING PLAN
AREA A

DRAWING No.
M2 101A.02

C:\Users\dragone\Documents\VGFD2001-Central21-H_dragone2Y2VR.rvt
12/22/2022 3:41:48 PM

GENRAL NOTES:

1. REFRIGERANT PIPING IS SCHEMATIC, COORDINATE REFRIGERANT PIPE SIZE WITH MANUFACTURER. PROVIDE PIPING SHOP DRAWING FROM MANUFACTURER FOR REVIEW.
2. ROUTE CONDENSATE PIPING TO NEAREST JANITORS SINK OR ROUTE TO FLOOR DRAIN AS SHOWN. ALL COND. PIPING NOT CONNECTED TO CONDENSATE PUMP (TAGGED AS CDP) TO BE SLOPED DOWN 1/8" -1'-0" MINIMUM TOWARDS DRAIN.
3. SEE DETAILS FOR ISOLATION VALVE REQUIREMENTS.
4. REFER TO SEISMIC RESTRAINT SCHEDULE FOR PIPING REQUIRING SEISMIC SUPPORTS

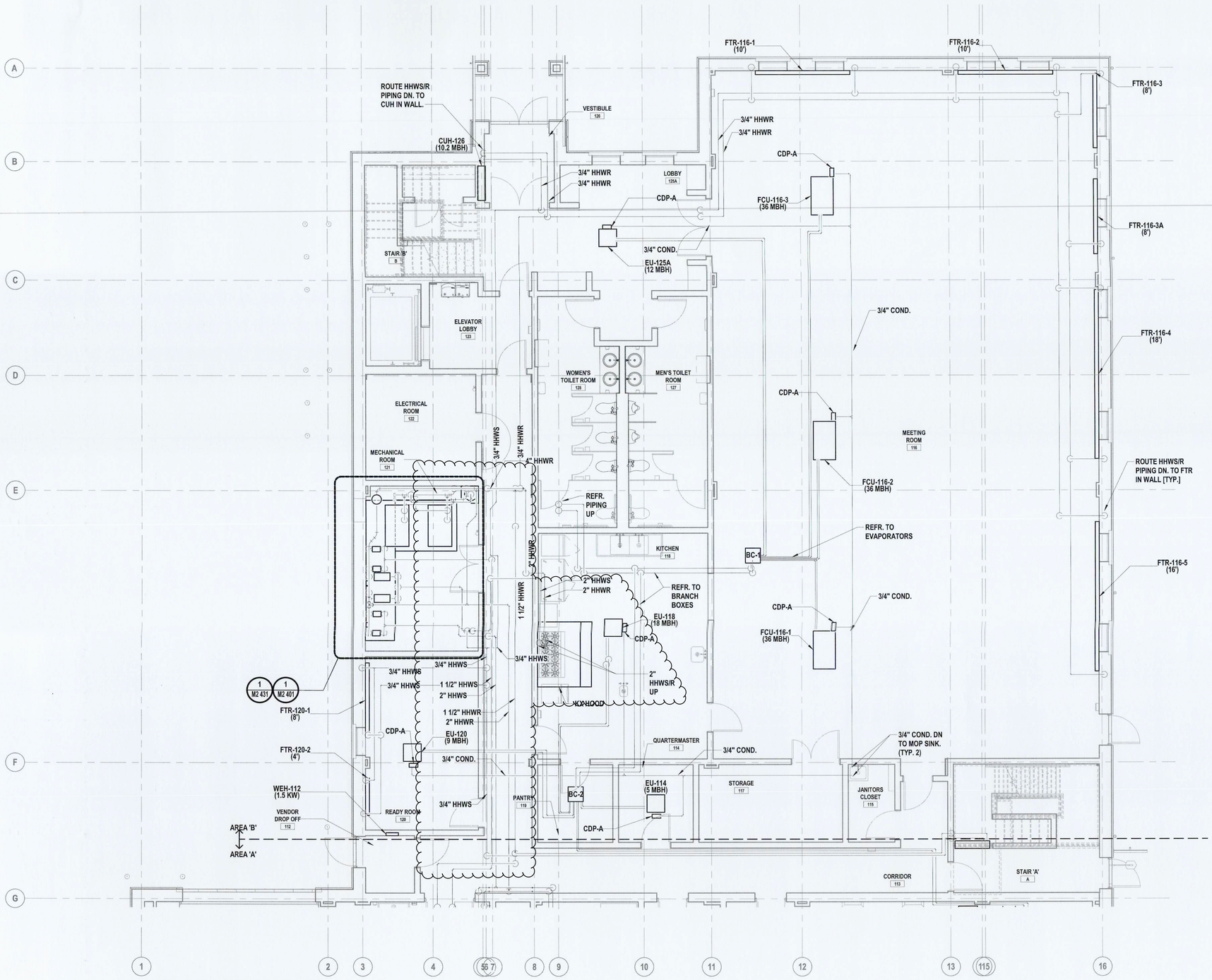

1 First Floor HVAC Piping Plan
SCALE: 3/16" = 1'-0"

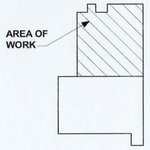

Key Plan
SCALE: N.T.S.

H2M architects + engineers
538 Broad Hollow Road, 4th Floor East
Melville, NY 11747
631.756.8000 • www.h2m.com

CONSULTANTS:

MARK	DATE	DESCRIPTION
2	12/22/2022	REVS. PER TOWN COMMENT

STATE OF NEW YORK · JOHN MAHER · LICENSED PROFESSIONAL ENGINEER · 071303

*ALTERATION OF THIS DOCUMENT EXCEPT BY A LICENSED PROFESSIONAL IS ILLEGAL

DESIGNED BY:	DRAWN BY:	CHECKED BY:	REVIEWED BY:
DKR	DKR		
PROJECT No: VGFD2001	DATE: JULY 2022	SCALE: AS SHOWN	

CLIENT

VAILS GATE FIRE DISTRICT

New Storage Building (Phase I)
New Fire Station (Phase II)

872 Blooming Grove Turnpike
New Windsor, NY 12553

CONTRACT

CONTRACT G
GENERAL CONSTRUCTION

STATUS

FINAL BID DOCUMENT

SHEET TITLE

FIRST FLOOR HVAC PIPING PLAN
AREA B

DRAWING No.

M2 101B.02

C:\Users\dragone\Documents\VGFD2001-Central21-H_dragone2YXR.rvt

12/22/2022 3:41:49 PM

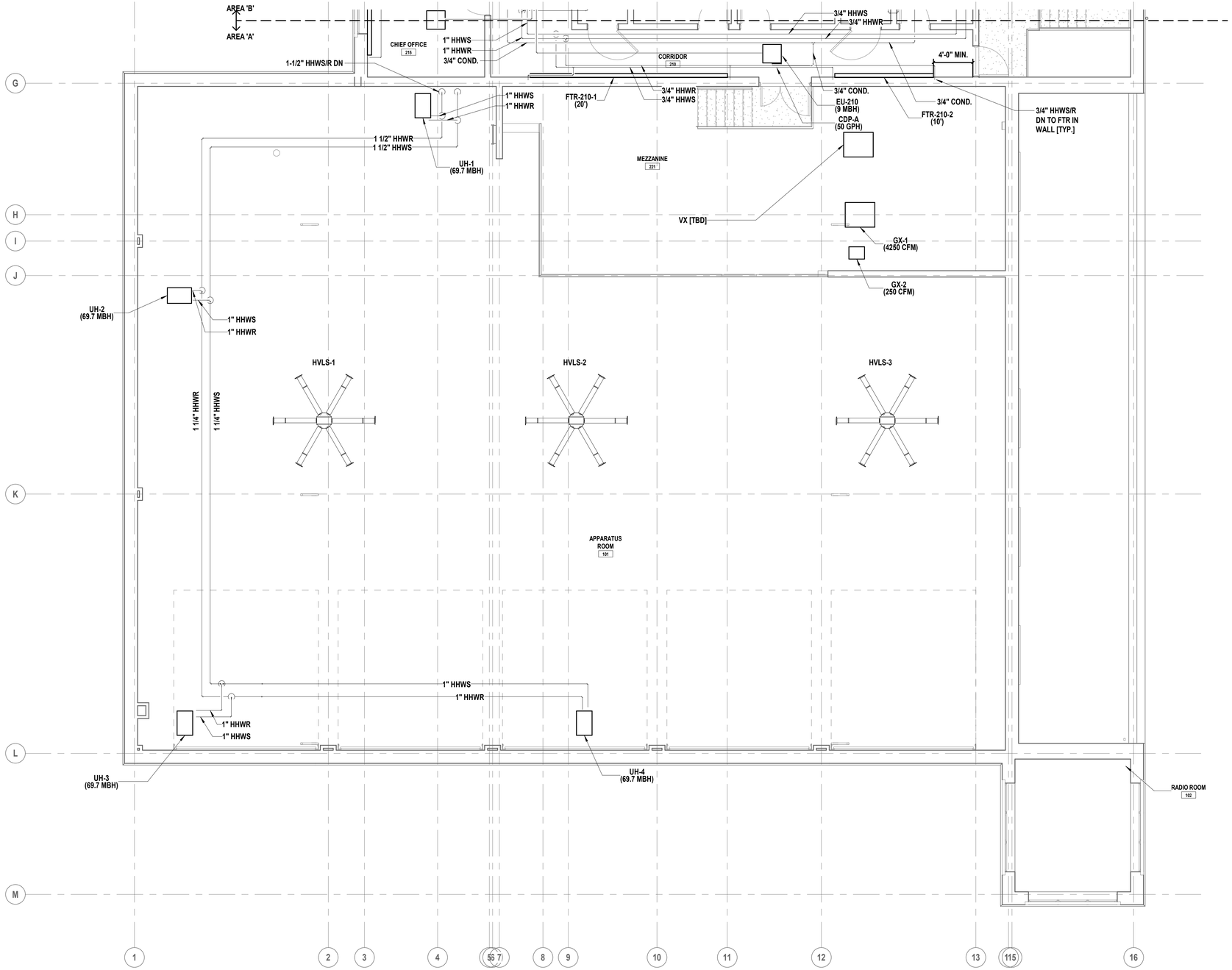

1 **Second Floor HVAC Piping Plan**
SCALE: 3/16" = 1'-0"

GENRAL NOTES:

1. REFRIGERANT PIPING IS SCHEMATIC, COORDINATE REFRIGERANT PIPE SIZE WITH MANUFACTURER. PROVIDE PIPING SHOP DRAWING FROM MANUFACTURER FOR REVIEW.
2. ROUTE CONDENSATE PIPING TO NEAREST JANITORS SINK OR ROUTE TO FLOOR DRAIN AS SHOWN. ALL COND. PIPING NOT CONNECTED TO CONDENSATE PUMP (TAGGED AS CDP) TO BE SLOPED DOWN 1/8" -1'-0" MINIMUM TOWARDS DRAIN.
3. SEE DETAILS FOR ISOLATION VALVE REQUIREMENTS.

KEYED NOTES:

VX BY DISTRICT FOR REFERENCE ONLY

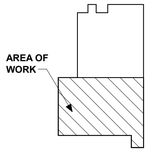

Key Plan
SCALE: N.T.S.

H2M architects + engineers
538 Broad Hollow Road, 4th Floor East
Melville, NY 11747
631.756.8000 • www.h2m.com

CONSULTANTS:

MARK	DATE	DESCRIPTION

STATE OF NEW YORK · JOHN LAHEY · 101303 · LICENSED PROFESSIONAL ENGINEER

PROFESSIONAL IS LICENSED

DESIGNED BY:	DRAWN BY:	CHECKED BY:	REVIEWED BY:
DKR	DKR	MJV	JML
PROJECT No: VGFD2001	DATE: JULY 2022	SCALE: AS SHOWN	

CLIENT
VAILS GATE FIRE DISTRICT

New Storage Building (Phase I)
New Fire Station (Phase II)

872 Blooming Grove Turnpike
New Windsor, NY 12553

CONTRACT
CONTRACT G
GENERAL CONSTRUCTION

STATUS
FINAL BID DOCUMENT

SHEET TITLE
SECOND FLOOR HVAC PIPING PLAN
AREA A

DRAWING No.
M2 102A.00

C:\Users\dragone\Documents\VGFD2001-Central21-H_dragone.rvt

7/15/2022 12:54:31 PM

GENRAL NOTES:

1. REFRIGERANT PIPING IS SCHEMATIC, COORDINATE REFRIGERANT PIPE SIZE WITH MANUFACTURER. PROVIDE PIPING SHOP DRAWING FROM MANUFACTURER FOR REVIEW.
2. ROUTE CONDENSATE PIPING TO NEAREST JANITORS SINK OR ROUTE TO FLOOR DRAIN AS SHOWN. ALL COND. PIPING NOT CONNECTED TO CONDENSATE PUMP (TAGGED AS CDP) TO BE SLOPED DOWN 1/8" -1'-0" MINIMUM TOWARDS DRAIN.
3. SEE DETAILS FOR ISOLATION VALVE REQUIREMENTS.
4. REFER TO SEISMIC RESTRAINT SCHEDULE FOR PIPING REQUIRING SEISMIC SUPPORTS

1 Second Floor HVAC Piping Plan
SCALE: 3/16" = 1'-0"

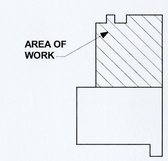

Key Plan
SCALE: N.T.S.

H2M architects + engineers

538 Broad Hollow Road, 4th Floor East
Melville, NY 11747
631.756.8000 • www.h2m.com

CONSULTANTS:

MARK	DATE	DESCRIPTION
2	12/22/2022	REVS. PER TOWN COMMENT

STATE OF NEW YORK · JOHN LAHEY · LICENSED PROFESSIONAL ENGINEER · 01303

*ALTERATION OF THIS DOCUMENT IS ILLEGAL BY A LICENSED PROFESSIONAL IN ILLEGAL

DESIGNED BY:	DRAWN BY:	CHECKED BY:	REVIEWED BY:
DKR	DKR		
PROJECT No: VGFD2001	DATE: JULY 2022		SCALE: AS SHOWN

CLIENT
VAILS GATE FIRE DISTRICT

New Storage Building (Phase I)
New Fire Station (Phase II)

872 Blooming Grove Turnpike
New Windsor, NY 12553

CONTRACT
CONTRACT G
GENERAL CONSTRUCTION

STATUS
FINAL BID DOCUMENT

SHEET TITLE
SECOND FLOOR HVAC PIPING PLAN AREA B

DRAWING No.
M2 102B.02

C:\Users\dragone\Documents\VGFD2001-Central21-H_dragone2Y2VR.rvt
12/22/2022 3:41:52 PM

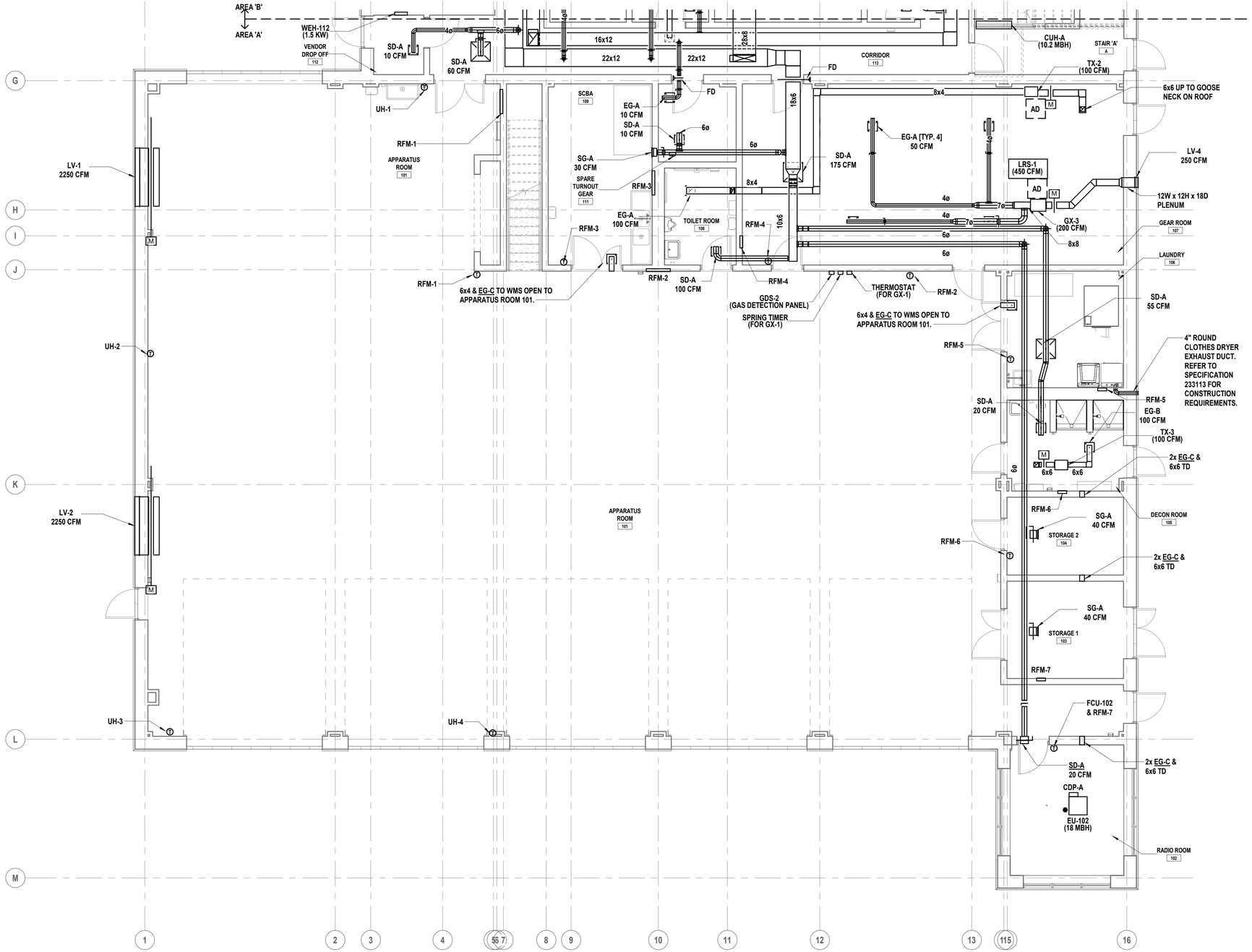

1 First Floor Ductwork Plan

SCALE: 3/16" = 1'-0"

GENERAL NOTES:

1. ALL DUCT SIZES ARE CLEAR INSIDE DIMENSIONS. REFER TO SPECIFICATIONS FOR ALL DUCT CONSTRUCTION REQUIREMENTS.
2. ALL SUPPLY, RETURN AND EXHAUST BRANCH DUCTWORK SHALL BE PROVIDED WITH VOLUME DAMPERS.
3. MAINTAIN 10'-0" CLEARANCE BETWEEN OUTSIDE AIR AND EXHAUST AIR TERMINATIONS ON ROOF.
4. PROVIDE SOUND PROOFED PENETRATIONS THROUGH ALL NON FIRE RATED INTERIOR WALLS, USE TREMCO ACOUSTICAL SEALANT OR APPROVED EQUAL

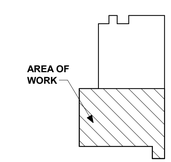

Key Plan

SCALE: N.T.S.

H2M architects + engineers

538 Broad Hollow Road, 4th Floor East
Melville, NY 11747
631.756.8000 • www.h2m.com

CONSULTANTS:

MARK	DATE	DESCRIPTION

STATE OF NEW YORK · JOHN LAHEY · 101303 · LICENSED PROFESSIONAL ENGINEER

PROFESSIONAL IN LITIGATION

DESIGNED BY:	DRAWN BY:	CHECKED BY:	REVIEWED BY:
DKR	DKR	MJV	JML
PROJECT No: VGFD2001	DATE: JULY 2022	SCALE: AS SHOWN	

CLIENT

VAILS GATE FIRE DISTRICT

New Storage Building (Phase I)
New Fire Station (Phase II)

872 Blooming Grove Turnpike
New Windsor, NY 12553

CONTRACT

CONTRACT G
GENERAL CONSTRUCTION

STATUS

FINAL BID DOCUMENT

SHEET TITLE

FIRST FLOOR DUCTWORK PLAN
AREA A

DRAWING No.

M2 131A.00

C:\Users\dragone\Documents\VGFD2001-Central21-H_dragone.rvt

7/15/2022 12:54:38 PM

GENERAL NOTES:

1. ALL DUCT SIZES ARE CLEAR INSIDE DIMENSIONS. REFER TO SPECIFICATIONS FOR ALL DUCT CONSTRUCTION REQUIREMENTS.
2. ALL SUPPLY, RETURN AND EXHAUST BRANCH DUCTWORK SHALL BE PROVIDED WITH VOLUME DAMPERS.
3. MAINTAIN 10'-0" CLEARANCE BETWEEN OUTSIDE AIR AND EXHAUST AIR TERMINATIONS ON ROOF.
4. COORDINATE WITH NEW STRUCTURE, OFFSET AS REQUIRED.
5. MAINTAIN HEADROOM FOR ALL NEW HORIZONTAL DUCTWORK (6'-8" MINIMUM).
6. PROVIDE SOUND PROOFED PENETRATIONS THROUGH ALL NON FIRE RATED INTERIOR WALLS, USE TREMCO ACOUSTICAL SEALANT OR APPROVED EQUAL

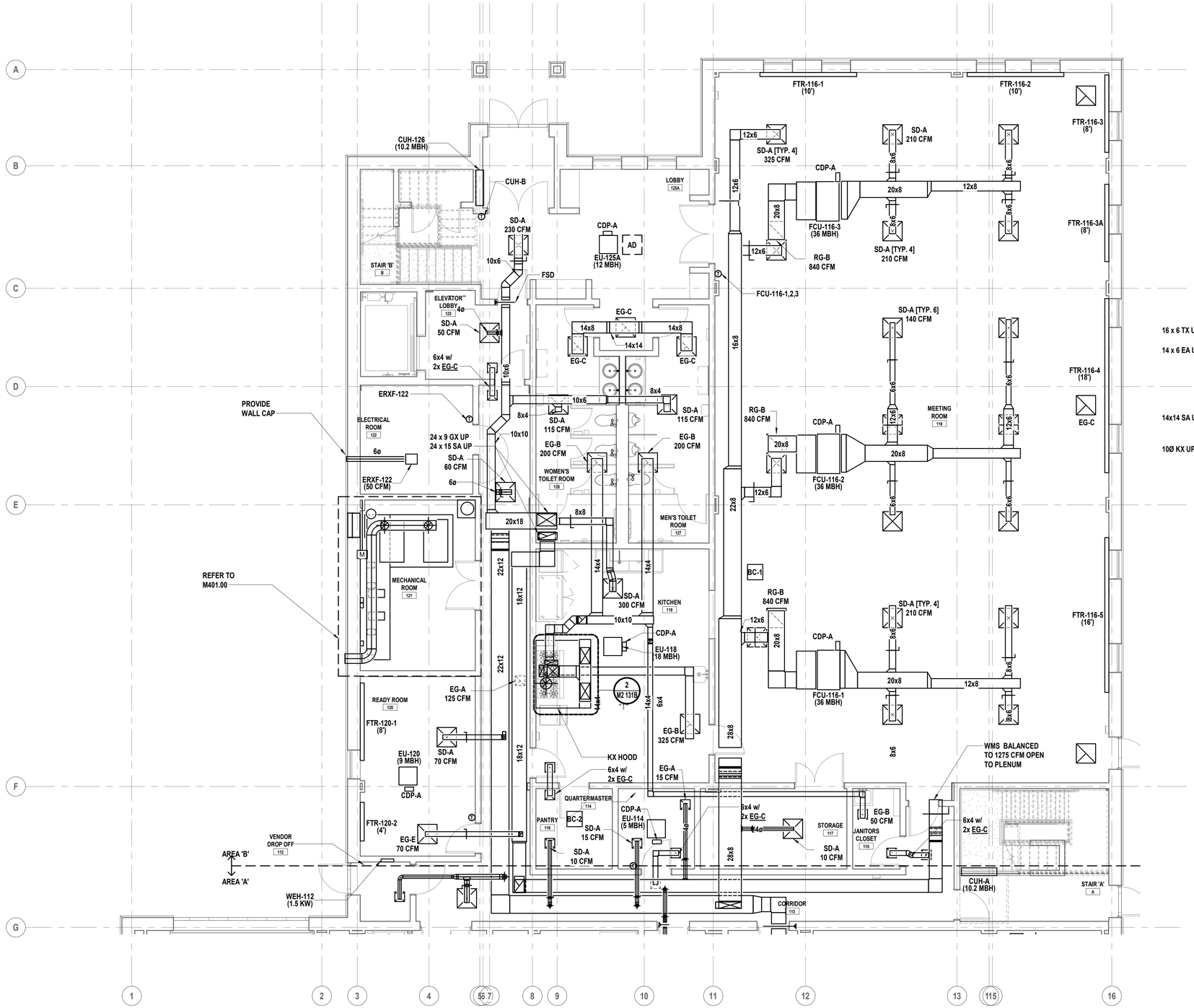

1 **First Floor Ductwork Plan**
SCALE: 3/16" = 1'-0"

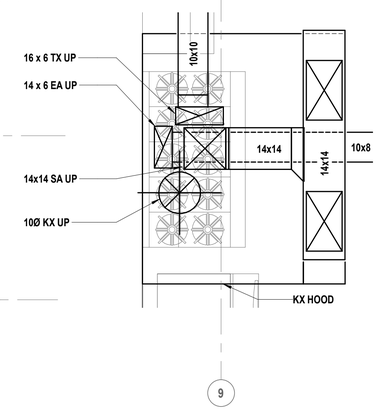

2 **HVAC KITCHEN HOOD EXPANDED VIEW**
SCALE: 1/2" = 1'-0"

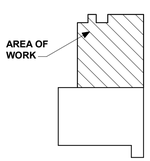

Key Plan
SCALE: N.T.S.

H2M architects + engineers
538 Broad Hollow Road, 4th Floor East
Melville, NY 11747
631.756.8000 • www.h2m.com

CONSULTANTS:

MARK	DATE	DESCRIPTION

STATE OF NEW YORK · JOHN LAHEY · 101303 · LICENSED PROFESSIONAL ENGINEER

DESIGNED BY:	DRAWN BY:	CHECKED BY:	REVIEWED BY:
DKR	DKR	MJV	JML
PROJECT No: VGFD2001	DATE: JULY 2022		SCALE: AS SHOWN

CLIENT

VAILS GATE FIRE DISTRICT

New Storage Building (Phase I)
New Fire Station (Phase II)

872 Blooming Grove Turnpike
New Windsor, NY 12553

CONTRACT
CONTRACT G
GENERAL CONSTRUCTION

STATUS
FINAL BID DOCUMENT

SHEET TITLE
FIRST FLOOR DUCTWORK PLAN
AREA B

DRAWING No.
M2 131B.00

C:\Users\dragone\Documents\VGFD2001-Central21-H_dragone.rvt

7/15/2022 12:54:39 PM

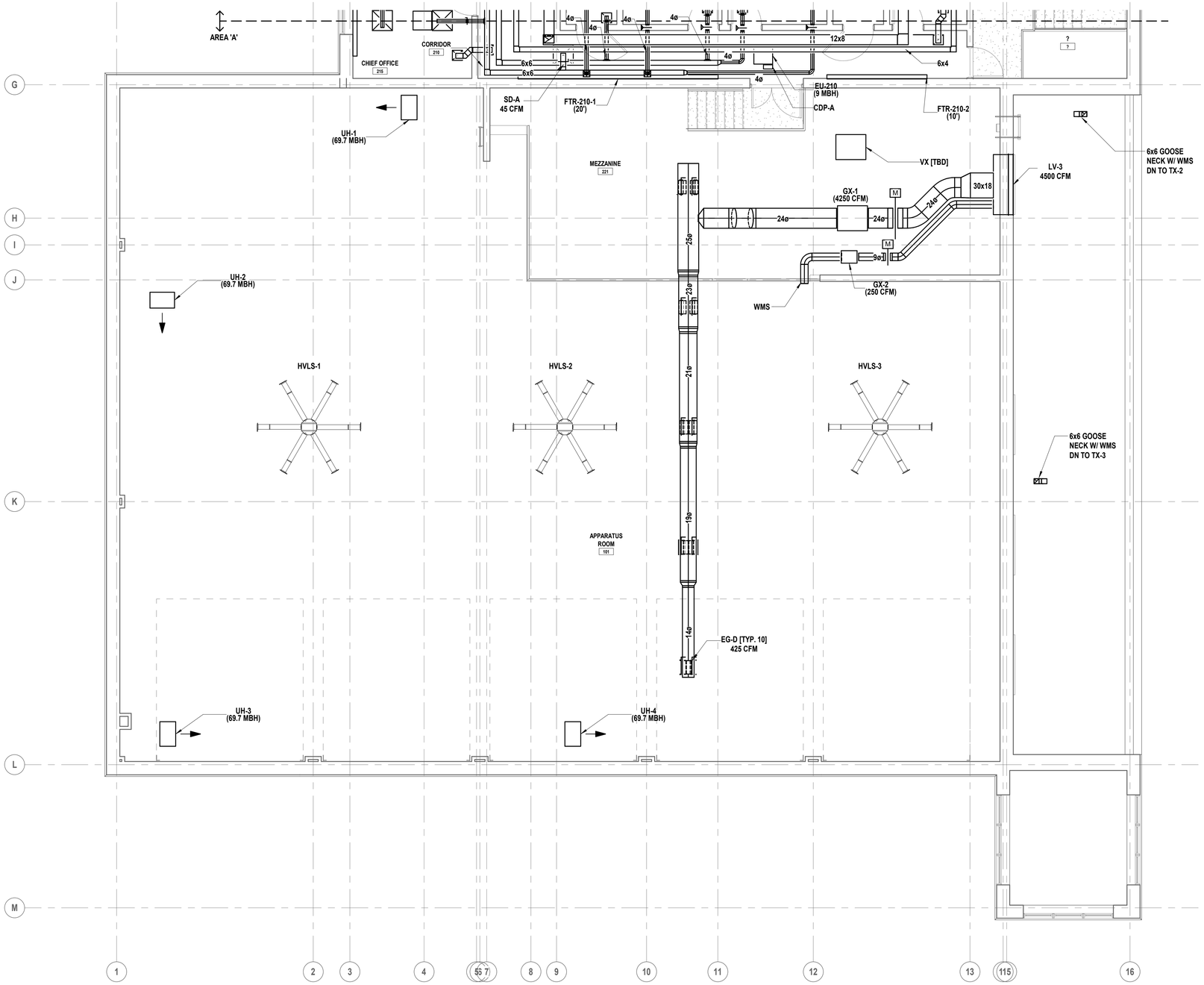

1 Second Floor Ductwork Plan
SCALE: 3/16" = 1'-0"

GENERAL NOTES:

1. ALL DUCT SIZES ARE CLEAR INSIDE DIMENSIONS. REFER TO SPECIFICATIONS FOR ALL DUCT CONSTRUCTION REQUIREMENTS.
2. ALL SUPPLY, RETURN AND EXHAUST BRANCH DUCTWORK SHALL BE PROVIDED WITH VOLUME DAMPERS.
3. MAINTAIN 10'-0" CLEARANCE BETWEEN OUTSIDE AIR AND EXHAUST AIR TERMINATIONS ON ROOF.
4. PROVIDE SOUND PROOFED PENETRATIONS THROUGH ALL NON FIRE RATED INTERIOR WALLS, USE TREMCO ACOUSTICAL SEALANT OR APPROVED EQUAL

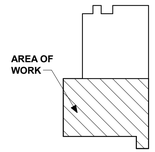

Key Plan
SCALE: N.T.S.

H2M architects + engineers
538 Broad Hollow Road, 4th Floor East
Melville, NY 11747
631.756.8000 • www.h2m.com

CONSULTANTS:

MARK	DATE	DESCRIPTION

STATE OF NEW YORK · JOHN LAHEY · 101303 · LICENSED PROFESSIONAL ENGINEER

DESIGNED BY:	DRAWN BY:	CHECKED BY:	REVIEWED BY:
DKR	DKR	MJV	JML
PROJECT No: VGFD2001	DATE: JULY 2022	SCALE: AS SHOWN	

CLIENT
VAILS GATE FIRE DISTRICT

New Storage Building (Phase I)
New Fire Station (Phase II)

872 Blooming Grove Turnpike
New Windsor, NY 12553

CONTRACT
CONTRACT G
GENERAL CONSTRUCTION

STATUS
FINAL BID DOCUMENT

SHEET TITLE
SECOND FLOOR DUCTWORK PLAN
AREA A

DRAWING No.
M2 132A.00

C:\Users\dragone\Documents\VGFD2001-Central21-H_dragone.rvt
7/15/2022 12:54:41 PM

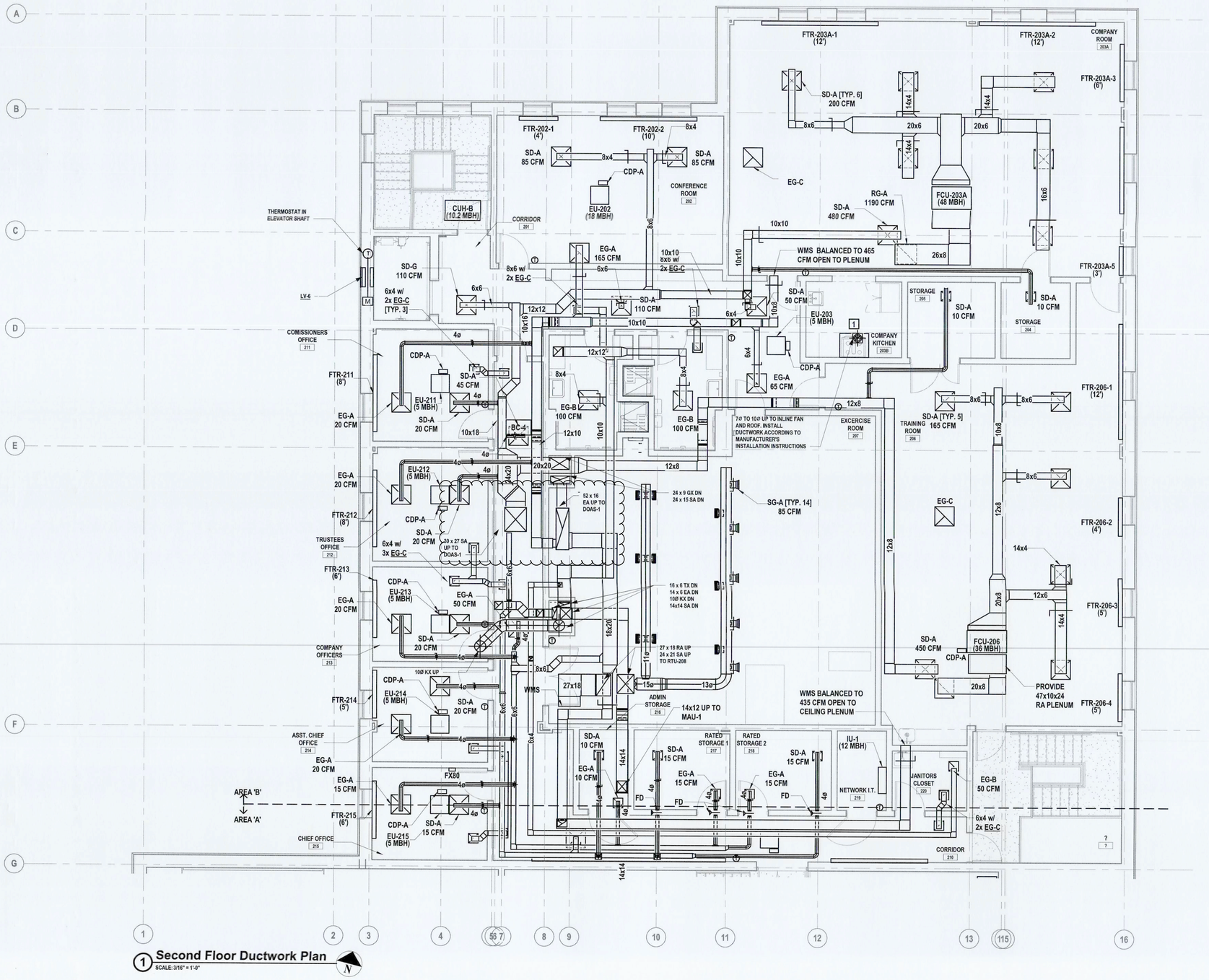

1 Second Floor Ductwork Plan
SCALE: 3/16" = 1'-0"

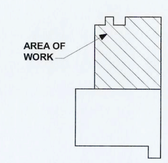

Key Plan
SCALE: N.T.S.

GENERAL NOTES:

1. ALL DUCT SIZES ARE CLEAR INSIDE DIMENSIONS. REFER TO SPECIFICATIONS FOR ALL DUCT CONSTRUCTION REQUIREMENTS.
2. ALL SUPPLY, RETURN AND EXHAUST BRANCH DUCTWORK SHALL BE PROVIDED WITH VOLUME DAMPERS.
3. MAINTAIN 10'-0" CLEARANCE BETWEEN OUTSIDE AIR AND EXHAUST AIR TERMINATIONS ON ROOF.
4. COORDINATE WITH NEW STRUCTURE, OFFSET AS REQUIRED.
5. MAINTAIN HEADROOM FOR ALL NEW HORIZONTAL DUCTWORK (6'-8" MINIMUM).
6. PROVIDE SOUND PROOFED PENETRATIONS THROUGH ALL NON FIRE RATED INTERIOR WALLS. USE TREMCO ACOUSTICAL SEALANT OR APPROVED EQUAL
7. REFER TO SEISMIC RESTRAINT SCHEDULE FOR DUCTWORK AND EQUIPMENT REQUIRING SEISMIC SUPPORTS

KEYED NOTES:

1 DENLAR D1030-D-IF-G HOOD AND FAN SHOWN. REFER TO ARCHITECTURAL DRAWINGS.

H2M architects + engineers

538 Broad Hollow Road, 4th Floor East
Melville, NY 11747
631.756.8000 • www.h2m.com

CONSULTANTS:

MARK	DATE	DESCRIPTION
2	12/22/2022	REVS. PER TOWN COMMENT

STATE OF NEW YORK · JOHN LAREY · 01303 · LICENSED PROFESSIONAL ENGINEER

"ALTERATION OF THIS DOCUMENT EXCEPT BY A LICENSED PROFESSIONAL IS ILLEGAL."

DESIGNED BY:	DRAWN BY:	CHECKED BY:	REVIEWED BY:
DKR	DKR		
PROJECT No: VGFD2001	DATE: JULY 2022	SCALE: AS SHOWN	

CLIENT

VAILS GATE FIRE DISTRICT

New Storage Building (Phase I)
New Fire Station (Phase II)

872 Blooming Grove Turnpike
New Windsor, NY 12553

CONTRACT
CONTRACT G
GENERAL CONSTRUCTION

STATUS
FINAL BID DOCUMENT

SHEET TITLE
SECOND FLOOR DUCTWORK PLAN AREA B

DRAWING No.
M2 132B.02

C:\Users\dragone\Documents\VGFD2001-Central21-H_dragone21'2VR.rvt
12/22/2022 3:41:55 PM

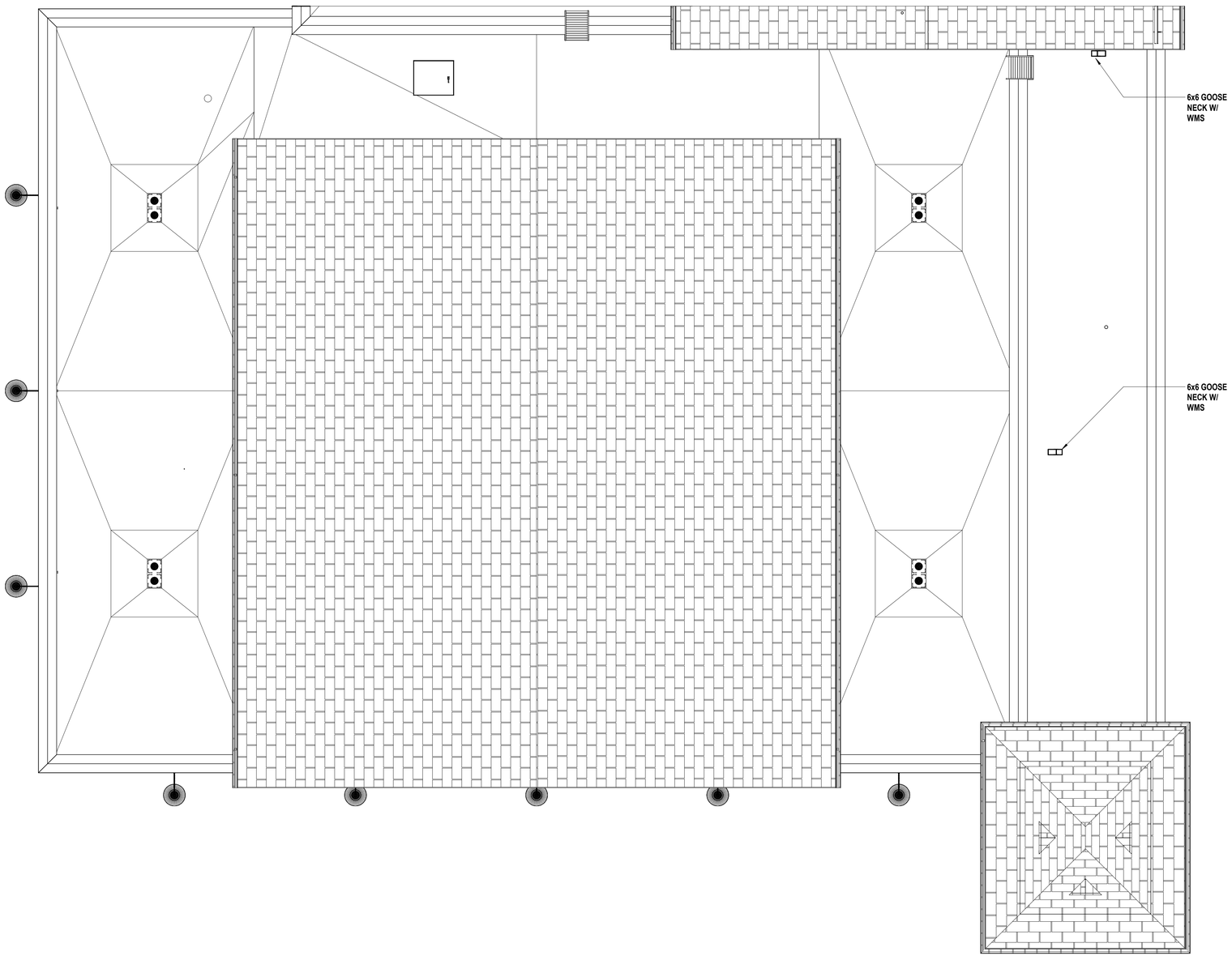

1 **ROOF AREA A**
SCALE: 3/16" - 1'-0"

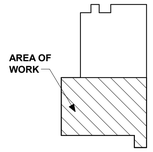

Key Plan
SCALE: N.T.S.

C:\Users\dragone\Documents\VGFD2001-Central21-H_dragone.rvt

7/15/2022 12:54:45 PM

H 2 M architects + engineers

538 Broad Hollow Road, 4th Floor East
Melville, NY 11747
631.756.8000 • www.h2m.com

CONSULTANTS:

MARK	DATE	DESCRIPTION

STATE OF NEW YORK · JOHN LAHEY · 101303 · LICENSED PROFESSIONAL ENGINEER

PROFESSIONAL IS LICENSED

DESIGNED BY:	DRAWN BY:	CHECKED BY:	REVIEWED BY:
DKR	DKR	MJV	JML

PROJECT No:	DATE:	SCALE:
VGFD2001	JULY 2022	AS SHOWN

CLIENT

VAILS GATE FIRE DISTRICT

New Storage Building (Phase I)
New Fire Station (Phase II)

872 Blooming Grove Turnpike
New Windsor, NY 12553

CONTRACT

CONTRACT G
GENERAL CONSTRUCTION

STATUS

FINAL BID DOCUMENT

SHEET TITLE

HVAC ROOF PLAN AREA A

DRAWING No.

M2 133A.00

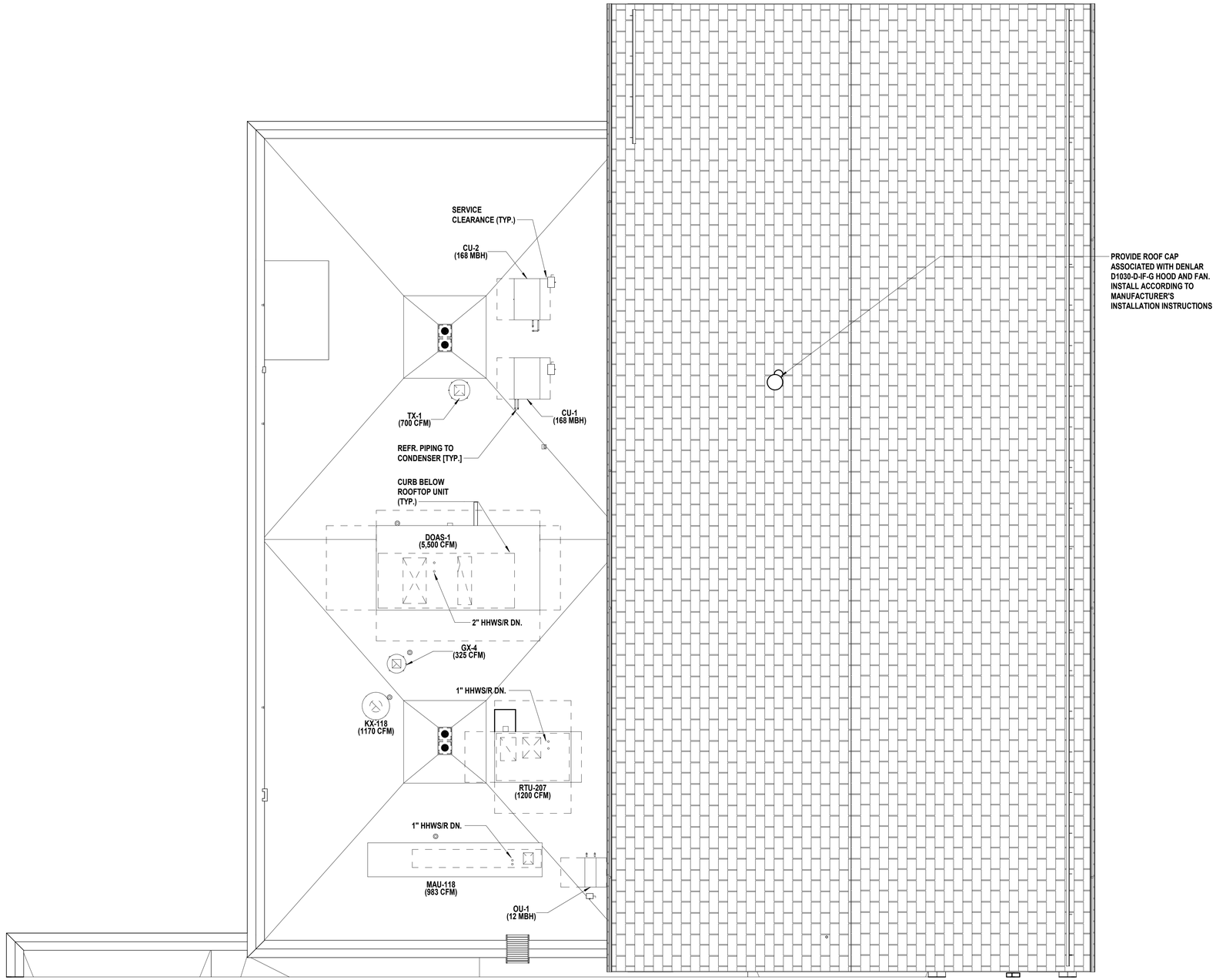

1 ROOF AREA B
SCALE: 3/16" - 1'-0"

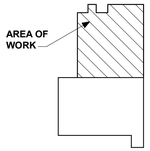

Key Plan
SCALE: N.T.S.

C:\Users\dragone\Documents\VGFD2001-Central21-H_dragone.rvt

7/15/2022 12:54:48 PM

H2M architects + engineers
538 Broad Hollow Road, 4th Floor East
Melville, NY 11747
631.756.8000 • www.h2m.com

CONSULTANTS:

MARK	DATE	DESCRIPTION

STATE OF NEW YORK · JOHN LAHEY · 101303 · LICENSED PROFESSIONAL ENGINEER

PROFESSIONAL IS LICENSED

DESIGNED BY:	DRAWN BY:	CHECKED BY:	REVIEWED BY:
DKR	DKR	MJV	JML
PROJECT No: VGFD2001	DATE: JULY 2022	SCALE: AS SHOWN	

CLIENT

VAILS GATE FIRE DISTRICT

New Storage Building (Phase I)
New Fire Station (Phase II)

872 Blooming Grove Turnpike
New Windsor, NY 12553

CONTRACT
CONTRACT G
GENERAL CONSTRUCTION

STATUS
FINAL BID DOCUMENT

SHEET TITLE
HVAC ROOF PLAN AREA B

DRAWING No.
M2 133B.00

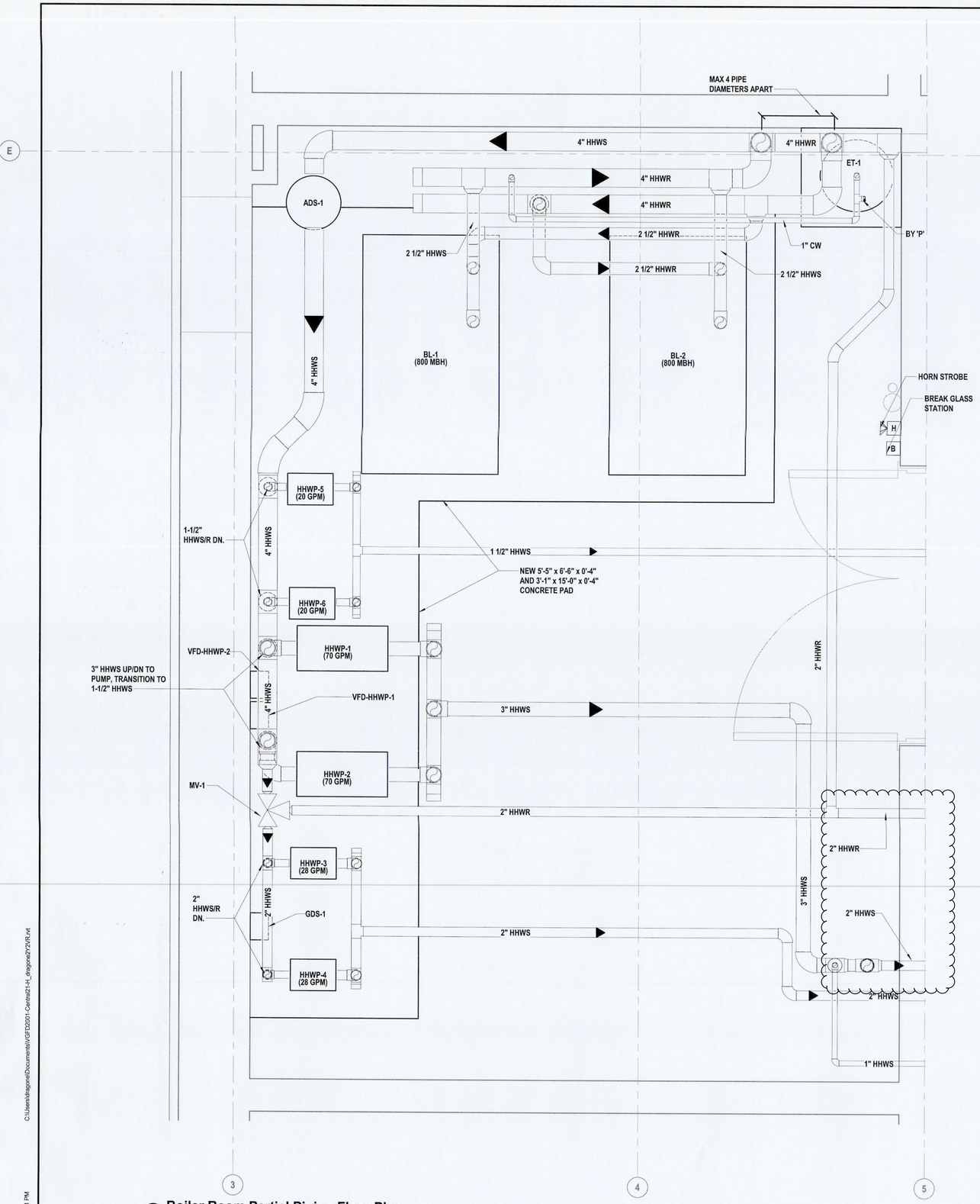

1 Boiler Room Partial Piping Floor Plan
SCALE: 1" = 1'-0"

GENERAL NOTES:

1. ALL DUCT SIZES ARE CLEAR INSIDE DIMENSIONS. REFER TO SPECIFICATIONS FOR ALL DUCT CONSTRUCTION REQUIREMENTS.
2. ALL SUPPLY, RETURN AND EXHAUST BRANCH DUCTWORK SHALL BE PROVIDED WITH VOLUME DAMPERS.
3. MAINTAIN 10'-0" CLEARANCE BETWEEN OUTSIDE AIR AND EXHAUST AIR TERMINATIONS ON ROOF.
4. COORDINATE WITH NEW STRUCTURE, OFFSET AS REQUIRED.
5. MAINTAIN HEADROOM FOR ALL NEW HORIZONTAL DUCTWORK (6'-8" MINIMUM).
6. PROVIDE SOUND PROOFED PENETRATIONS THROUGH ALL NON FIRE RATED INTERIOR WALLS. USE TREMCO ACOUSTICAL SEALANT OR APPROVED EQUAL.
7. REFER TO SEISMIC RESTRAINT SCHEDULE FOR DUCTWORK, PIPING AND EQUIPMENT REQUIRING SEISMIC SUPPORTS

COMBUSTION AIR REQUIRED:

BOILER GAS INPUT RATING (CFH): 800 (PER BOILER)
DOMESTIC WATER HEATER GAS INPUT RATING (MBH): 120
TOTAL GAS INPUT RATING (MBH): (800 x 2) + 120 = 1,720

*TO PROVIDE COMBUSTION AIR USING MECHANICAL COMBUSTION AIR SUPPLY IN ACCORDANCE WITH SECTION 304.9 OF THE 2020 NYS FUEL GAS CODE AND SECTION 701.1 OF THE 2020 NYS MECHANICAL CODE (I.E. NFPA 31).

VOLUMETRIC FLOW RATE OF COMBUSTION AIR REQUIRED BY CODE:
1 IN^2 PER 3,000 MBH OF TOTAL INPUT RATING OF ALL APPLIANCES LOCATED WITHIN THE SPACE

FREE AREA REQUIRED:
1,720 MBH x (1 IN^2 / 3,000 BTU/HR) = 573.33 IN^2 * 1 FT^2 / 144 IN^2 = 3.98 FT^2
COMBUSTION AIR FREE AREA PROVIDED: 4.07 FT^2 > 3.98 FT^2

H2M architects + engineers
538 Broad Hollow Road, 4th Floor East
Melville, NY 11747
631.756.8000 • www.h2m.com

CONSULTANTS:

MARK	DATE	DESCRIPTION
2	12/22/2022	REVS. PER TOWN COMMENT

STATE OF NEW YORK · JOHN DAVEY · 303 · LICENSED PROFESSIONAL ENGINEER

"ALTERATION OF THIS DOCUMENT EXCEPT BY A LICENSED PROFESSIONAL IS ILLEGAL."

DESIGNED BY:	DRAWN BY:	CHECKED BY:	REVIEWED BY:
DKR	DKR		
PROJECT No: VGFD2001	DATE: JULY 2022	SCALE: AS SHOWN	

CLIENT
VAILS GATE FIRE DISTRICT

New Storage Building (Phase I)
New Fire Station (Phase II)

872 Blooming Grove Turnpike
New Windsor, NY 12553

CONTRACT
CONTRACT G
GENERAL CONSTRUCTION

STATUS
FINAL BID DOCUMENT

SHEET TITLE
BOILER ROOM EXPANDED HVAC PIPING PLAN

DRAWING No.
M2 401.02

C:\Users\dragone\Documents\VGFD2001-Central21-H_dragone2Y2VR.rvt
12/22/2022 4:36:31 PM

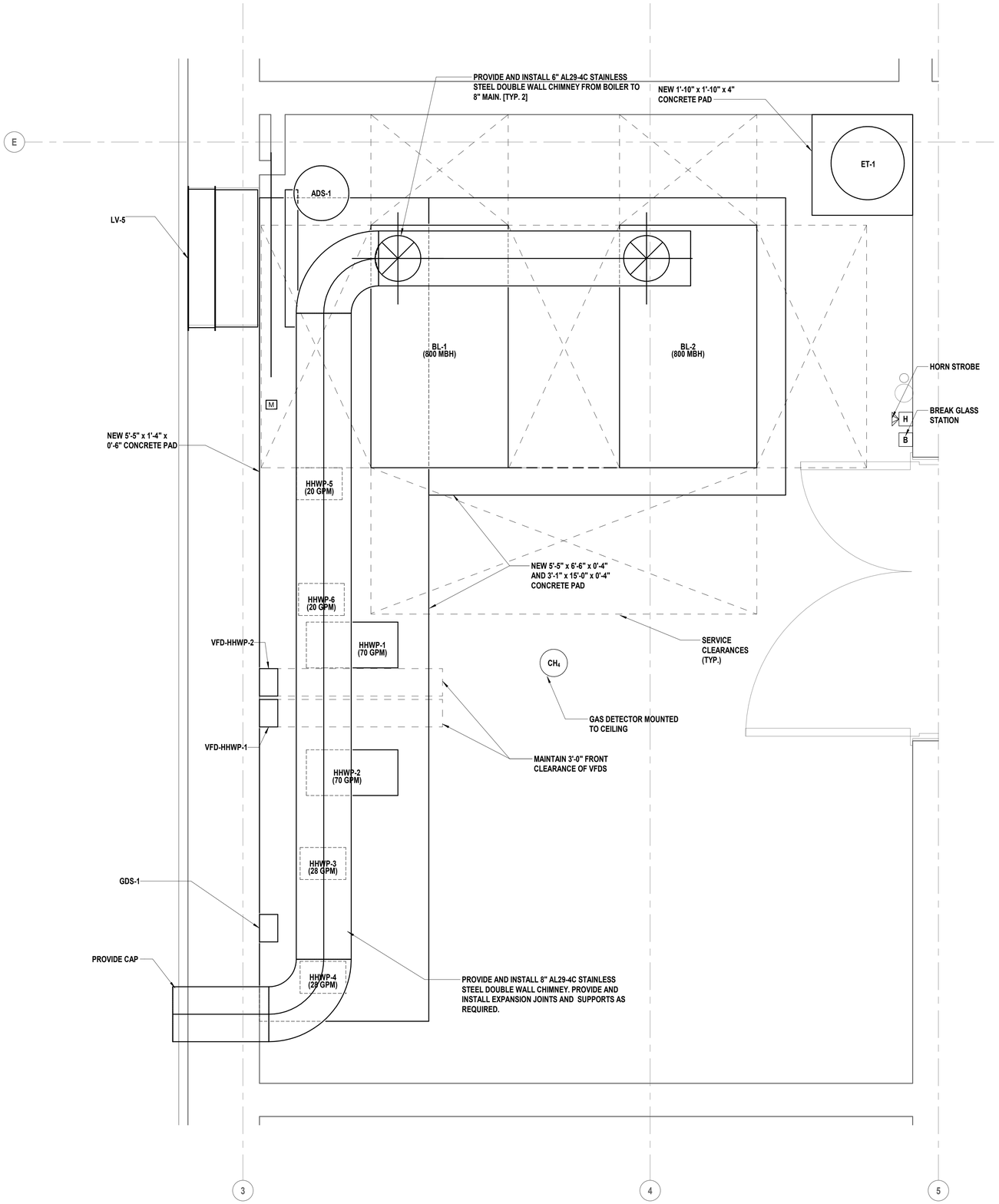

1 **Boiler Room Partial Equiment and Breeching Floor Plan**
SCALE: 1" = 1'-0"

C:\Users\dragone\Documents\VGFD2001-Central21-H_dragone.rvt

7/15/2022 12:54:50 PM

H2M architects + engineers

538 Broad Hollow Road, 4th Floor East
Melville, NY 11747
631.756.8000 • www.h2m.com

CONSULTANTS:

MARK	DATE	DESCRIPTION

STATE OF NEW YORK · JOHN LAHEY · 101303 · LICENSED PROFESSIONAL ENGINEER

PROFESSIONAL IN RESPONSIBLE CHARGE

DESIGNED BY:	DRAWN BY:	CHECKED BY:	REVIEWED BY:
JML	DKR	MJV	JML
PROJECT No: VGFD2001	DATE: JULY 2022		SCALE: AS SHOWN

CLIENT

VAILS GATE FIRE DISTRICT

New Storage Building (Phase I)
New Fire Station (Phase II)

872 Blooming Grove Turnpike
New Windsor, NY 12553

CONTRACT

CONTRACT G
GENERAL CONSTRUCTION

STATUS

FINAL BID DOCUMENT

SHEET TITLE

BOILER ROOM EXPANDED HVAC EQUIPMENT AND DUCTWORK PLAN

DRAWING No.

M2 431.00

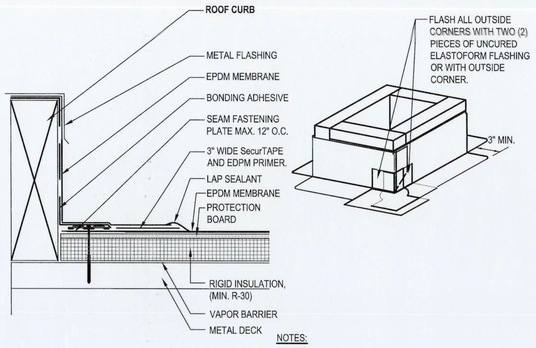

NOTES:

1. IF VERTICAL SPLICE IS NOT LOCATED AT CORNER, 6" WIDE UNCURED ELASTOFORM FLASHING OR PRESSURE-SENSITIVE FLASHING MUST BE CENTERED OVER FIELD SPLICE AT ANGLE CHANGE.
2. FASTENING PLATES MAY BE INSTALLED VERTICALLY.
3. APPLY PRIMER PRIOR TO INSTALLING SecurTAPE.
4. LAP SEALANT IS REQUIRED ON ALL FLASHING EDGES.

1 Roof Curb Detail
SCALE: NTS

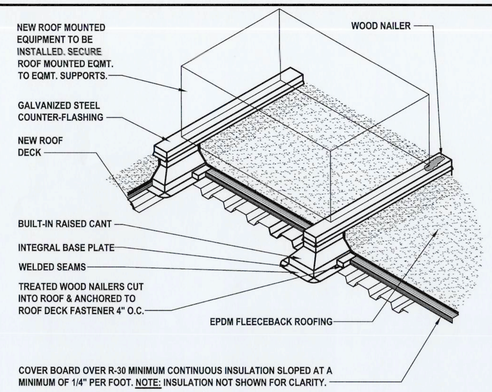

2 Equipment Support Detail
SCALE: NTS

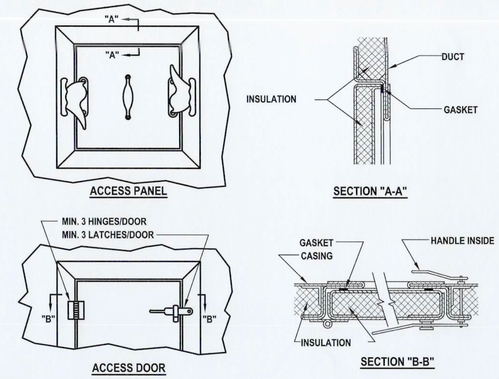

NOTES:

1. LATCHES SHALL BE OF THE WEDGE TYPE TO CLOSE DOORS TIGHTLY.
2. HINGES ON THE ACCESS DOORS SHALL HAVE NON-CORROSIVE PINS.
3. PROVIDE ACCESS DOORS ON AIR HANDLING UNITS AND DUCTWORK INSTALLED IN EQUIPMENT ROOMS. PROVIDE ACCESS PANELS ON ALL EQUIPMENT AND DUCTWORK INSTALLED ABOVE FINISHED CEILINGS WHERE SPACE LIMITATIONS DO NOT ALLOW HINGED DOORS TO OPEN.

3 Access Door & Panel Details
SCALE: NTS

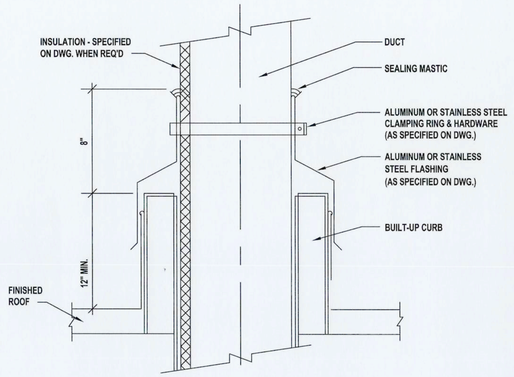

4 Duct Roof Penetration Detail
SCALE: NTS

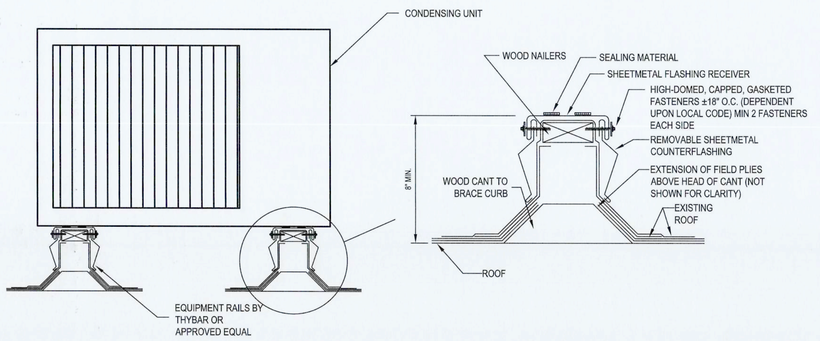

5 Condensing Unit Curb Detail
SCALE: NTS

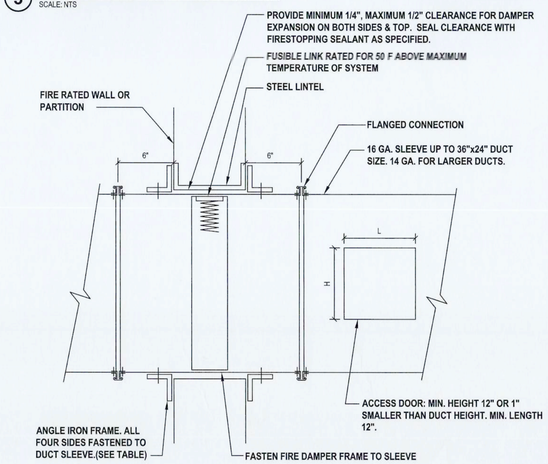

6 Low Pressure Fire Damper Detail
SCALE: NTS

GENERAL NOTES:

1. FIRE DAMPER TO BE U.L. LABELED N.F.P.A. 90A.
2. N.F.P.A. APPROVED INSTALLATION DETAILS TO BE PART OF SUBMISSION OF FIRE DAMPER FOR APPROVAL, WHICH SHALL MEET N.F.P.A. STANDARD 90A.
3. DETAILS SHOWN ARE FOR FIRE DAMPERS IN HORIZONTAL DUCTWORK. FOR FIRE DAMPERS IN VERTICAL DUCTWORK, DETAILS SIMILAR EXCEPT DAMPERS SHALL BE SPRING LOADED.
4. U.L. APPROVED BREAKAWAY SLIP JOINT CONNECTION MAY BE USED IN LIEU OF FLANGED CONNECTION.
5. ACCESS DOOR IS SHOWN ON SIDE OF DUCT. IF FUSIBLE LINK IS MORE ACCESSIBLE FROM BOTTOM OF DUCT, RELOCATE ACCESS DOOR.
6. FROM FIRST 10'-0" OF FAN DISCHARGE DUCTS AND FOR DUCT SIZES LESS THAN 6" DEEP, FIRE DAMPER BLADES SHALL BE INSTALLED IN POCKET OUTSIDE OF AIR STREAM.

ANGLE IRON TABLE	
WALL OPENING	ANGLE SIZE
UP TO 30"	1"x1"x1/8"
31" TO 54"	1-1/2"x1-1/2"x1/8"
55" TO 84"	3"x2"x3/16"
85" T0 120"	3"x2"x3/16"

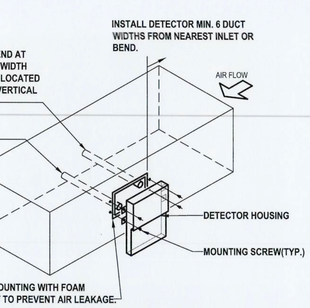

NOTES:

1. INTERFACE OF NEW DUCT SMOKE DETECTORS W/ EXISTING BUILDING FIRE ALARM SYSTEM BY CONTRACT 'E'.

7 Duct Mounting Smoke Detector Detail
SCALE: NTS

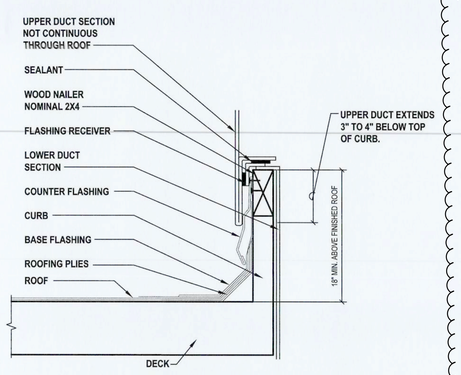

8 Ductwork Roof Penetration Detail
SCALE: NTS

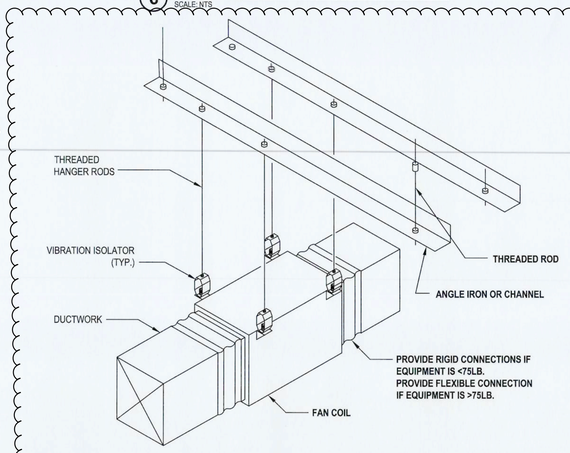

9 Inline Fan Coil Hanging Support Detail
SCALE: NTS

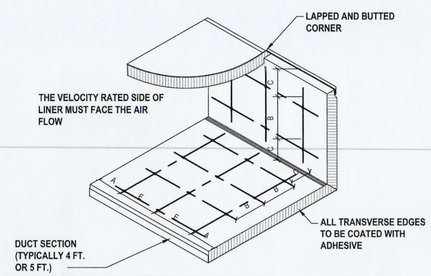

MAXIMUM SPACING FOR FASTENERS. ACTUAL INTERVALS ARE APPROXIMATE.

LINER ADHERED TO THE DUCT WITH 90% MIN. AREA COVERAGE OF ADHESIVE

VELOCITY*	DIMENSIONS			
	A	B	C	E
0-1500 FPM	3"	12"	4"	18"
1501-3500 FPM	3"	6"	4"	16"

* UNLESS A LOWER LEVEL IS SET BY MANUFACTURER OR LISTING AGENCY

10 Acoustical Liner Fastening Detail
SCALE: NTS

H2M architects + engineers
538 Broad Hollow Road, 4th Floor East
Melville, NY 11747
631.756.8000 • www.h2m.com

CONSULTANTS:

MARK	DATE	DESCRIPTION
2	12/22/2022	REVS. PER TOWN COMMENTS

STATE OF NEW YORK · JOHN M. LEE · 303 · LICENSED PROFESSIONAL ENGINEER

"ALTERATION OF THIS DOCUMENT EXCEPT BY A LICENSED PROFESSIONAL IS ILLEGAL"

DESIGNED BY:	DRAWN BY:	CHECKED BY:	REVIEWED BY:
DKR	DKR	MJV	JML

PROJECT No.:	DATE:	SCALE:
VGFD2001	JULY 2022	AS SHOWN

CLIENT

VAILS GATE FIRE DISTRICT

New Storage Building (Phase I)
New Fire Station (Phase II)

872 Blooming Grove Turnpike
New Windsor, NY 12553

CONTRACT

CONTRACT G
GENERAL CONSTRUCTION

STATUS

FINAL BID DOCUMENT

SHEET TITLE

HVAC DETAILS (1 OF 4)

DRAWING No.

M2 500.02

X:\VGFD\Vails Gate Fire Dept\VGFD2001-Vails Gate FD\Vars Firehouse\02-BIM-CADD\Con-ecs\hvac\M2 500.00 - Mechanical Details.dwg Last Modified: Dec 22, 2022 - 4:27pm Plotted on: Dec 22, 2022 - 4:28pm By dragone

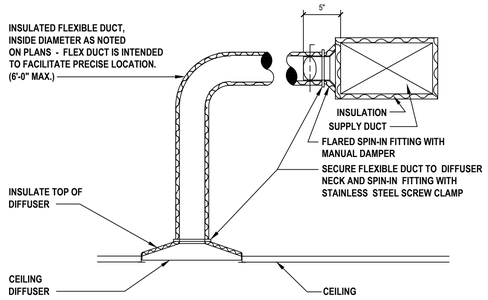

1 Ceiling Diffuser Connection
SCALE: NTS

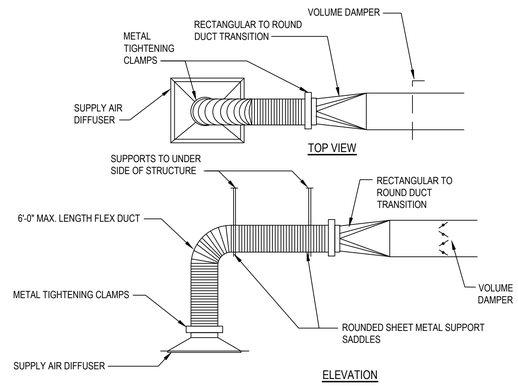

2 Round Neck Diffusers
SCALE: NTS

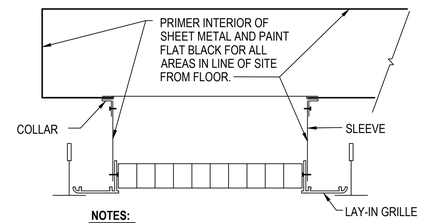

NOTES:

1. PROVIDE A GRILLE WITH A LAY-IN, ALUMINUM FRAME/ BORDER.
2. PROVIDE CONCEALED SCREW HOLES IN NECK.
3. PROVIDE CLINCH LOCK DUCT COLLAR AND TELESCOPIC SLEEVE.
4. SECURE GRILLE FRAME/ TO SLEEVE AND DUCT COLLAR TO SLEEVE.

3 Ducted Exhaust Ceiling Grille Detail
SCALE: NTS

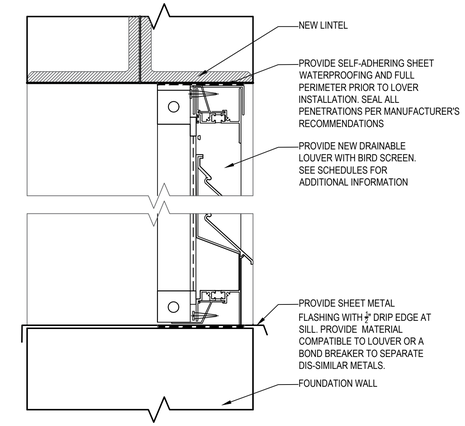

4 Typical Louver Detail
SCALE: NTS

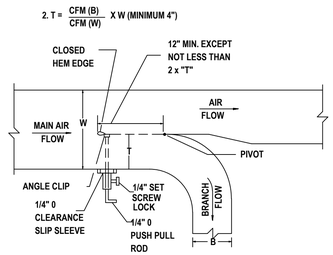

NOTES:
1. FURNISH THIS TYPE CONNECTION WHEN MAIN AIR FLOW IS GREATER THAN 700 CFM

5 Throat & Splitter Damper Supply Duct Branch
SCALE: NTS

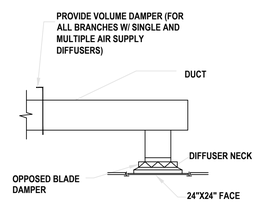

6 Diffuser Detail Supply Air
SCALE: NTS

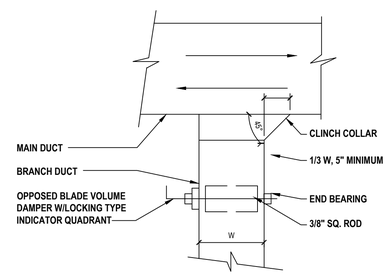

NOTE:

1. FURNISH THIS TYPE OF CONNECTION WHEN SINGLE LINE DUCTWORK IS INDICATED AS SHOWN FOR LOW PRESSURE BRANCHES WITH LESS THAN 33% CAPACITY OF MAIN DUCT.

7 Duct Branch Takeoff For Low Pressure Ductwork
SCALE: NTS

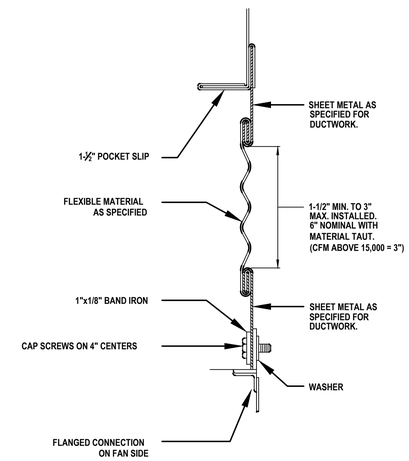

8 Flexible Duct Connection Detail
SCALE: NTS

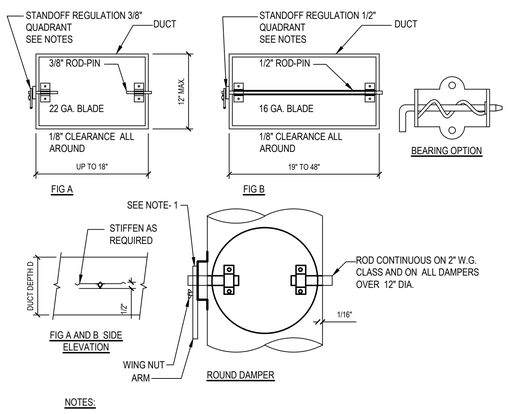

NOTES:

1. PROVIDE 2" HIGH STANDOFF REGULATORS FOR EXTERNALLY INSULATED DUCTWORK. PROVIDE REGULATORS WITH SEALS. DURO-DYNE MODEL E50.
2. STANDOFF BASE HEIGHT TO MATCH INSULATION THICKNESS. BASE CONSTRUCTION 16 GAUGE.
3. RAPIT DAMPER REGULATORS AND JIFFY DAMPERS ARE NOT ACCEPTABLE ON RECTANGULAR OR ROUND DUCTWORK.

9 Volume Dampers - Single Blade Type
SCALE: NTS

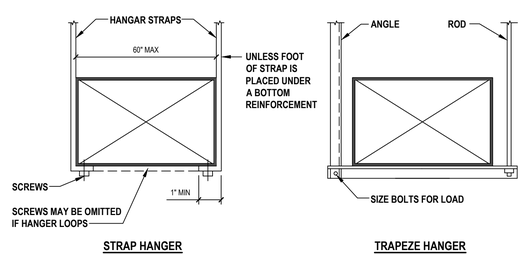

NOTES:

1. SIZE ALL SUPPORTS IN ACCORDANCE WITH THE SMACNA DUCT CONSTRUCTION STANDARDS, LATEST EDITION.

10 Hanger Detail
SCALE: NTS

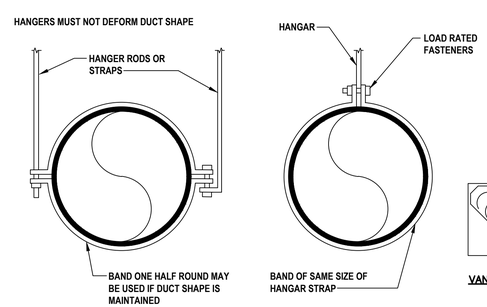

DUCT DIAMETER	BLK. OR GALV. ROD	GALVE STEEL STRAP
TO 10"	1/4"	1" X 22 GA.
11" TO 18"	1/4"	1" X 22 GA.
19" TO 24"	1/4"	1" X 22 GA.

NOTES:

1. SPACING 8'-0" ON CENTERS MAX

11 Round Duct Hangers
SCALE: NTS

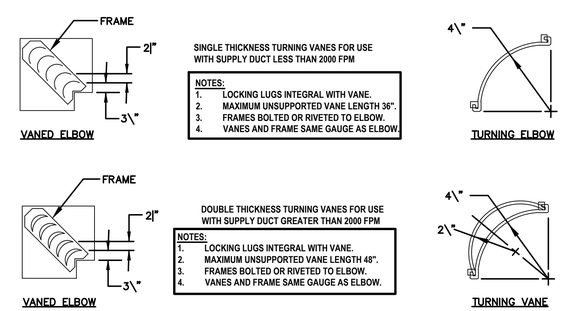

12 Turning Vanes For Square Elbows
SCALE: NTS

H2M architects + engineers
538 Broad Hollow Road, 4th Floor East
Melville, NY 11747
631.756.8000 • www.h2m.com

CONSULTANTS:

MARK	DATE	DESCRIPTION

STATE OF NEW YORK · JOHN LAHEY · 101303 · LICENSED PROFESSIONAL ENGINEER

"ALTERATION OF THIS DOCUMENT EXCEPT BY A LICENSED PROFESSIONAL IS ILLEGAL"

DESIGNED BY:	DRAWN BY:	CHECKED BY:	REVIEWED BY:
DKR	DKR	MJV	JML

PROJECT No.:	DATE:	SCALE:
VGFD2001	JULY 2022	AS SHOWN

CLIENT

VAILS GATE FIRE DISTRICT

New Storage Building (Phase I)
New Fire Station (Phase II)

872 Blooming Grove Turnpike
New Windsor, NY 12553

CONTRACT

CONTRACT G
GENERAL CONSTRUCTION

STATUS

FINAL BID DOCUMENT

SHEET TITLE

HVAC DETAILS (2 OF 4)

DRAWING No.

M2 501.00

X:\VGFD\Vails Gate Fire Dept\VGFD2001\Vails Gate FD New Firehouse\02-BIM-CADD\Cmd-docs\hvac\M2 500.00 - Mechanical Details.dwg Last Modified: Jul 13, 2022 - 8:18pm Plotted on: Jul 15, 2022 - 12:52pm By:dragone

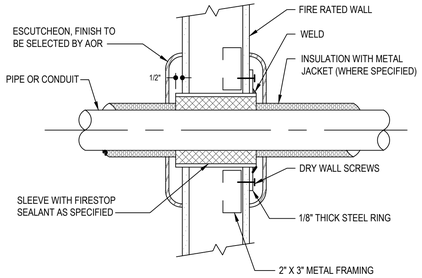

Pipe or Conduit Penetration Through Fire Rated Walls

SCALE: NTS (DETAIL #)

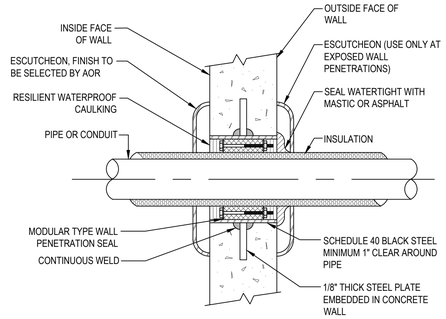

Pipe or Conduit Penetration Through Exterior Walls

SCALE: NTS

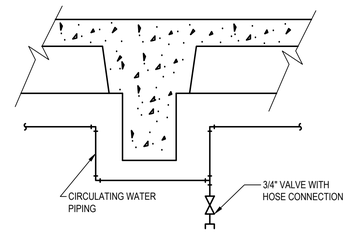

3 Draining Low Points in Piping Detail

SCALE: NTS

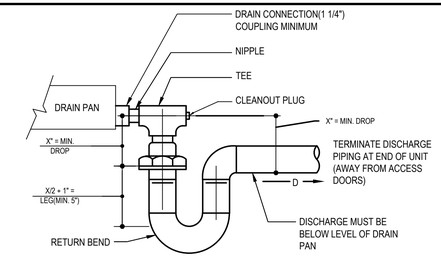

X = NEGATIVE INTERNAL STATIC PRESSURE AT FAN INLET(IN.)

NOTES:

1. ALLOW SUFFICIENT SPACE BELOW DRAIN PAN FOR TRAP.
2. PITCH DRAIN FOR PROPER RUN-OFF.
3. MANUALLY PRIME FILL TRAP BEFORE START-UP TO FORM INITIAL DRAIN SEAL.
4. SUPPORT LENGTHY DRAIN LINES TO PREVENT SAG AND CONDENSATE OVERFLOW.
5. PROVIDE DRAIN SEAL AT EACH AC UNIT.

4 Drain Pan Water Seal Piping Draw-Thru Unit

SCALE: NTS (DETAIL #)

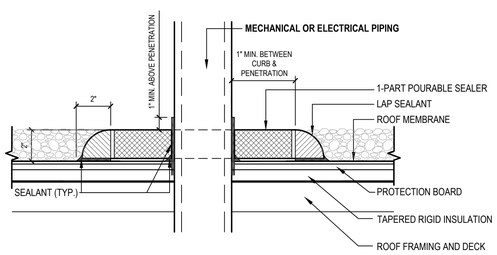

Pitch Pocket Detail

SCALE: NTS (DETAIL #)

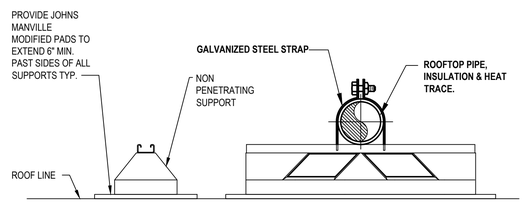

NOTES:

1. INSTALLATION ALSO TYPICAL FOR ROLLER ROOFTOP PIPE SUPPORTS.
2. SEE SPECIFICATION SECTION 230529 FOR INFORMATION ON ROOF TOP PIPE SUPPORT SYSTEM.

6 Roof Pipe Support Detail

SCALE: NTS

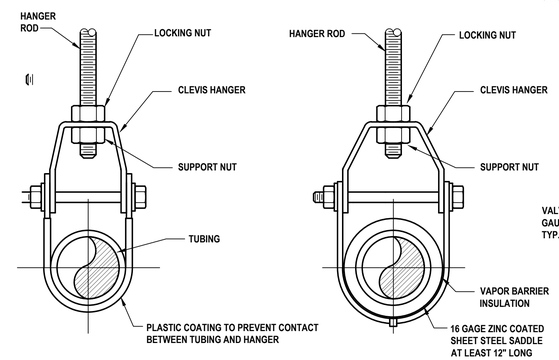

7 Copper Tubing Hanger Details

SCALE: NTS

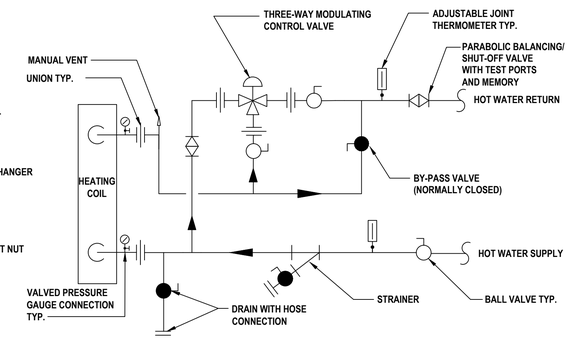

NOTES:

1. ARRANGE PIPING TO ALLOW FOR COIL REMOVAL.

8 Heating Hot Water Coil Piping Diagram - Three Way Valve

SCALE: NTS

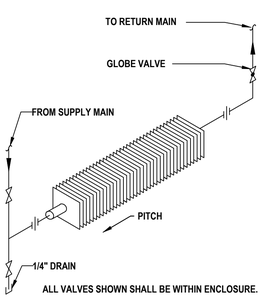

9 Hot Water Fin Tube Radiation Down Feed Piping

SCALE: NTS (DETAIL #)

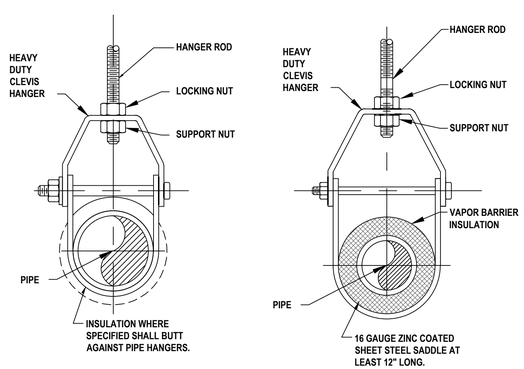

HANGER ROD SCHEDULE			
PIPE SIZE	ROD SIZE	PIPE SIZE	ROD SIZE
UP TO 2"	3/8" DIA.	4" THRU 5"	5/8" DIA.
2 1/2" THRU 3"	1/2" DIA		

10 Steel Pipe Hanger

SCALE: NTS

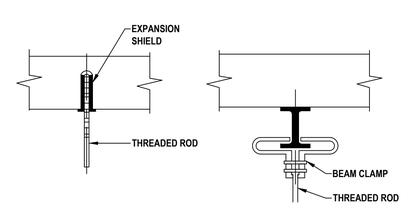

11 PIPE HANGER SUPPORT DETAIL

SCALE: NTS

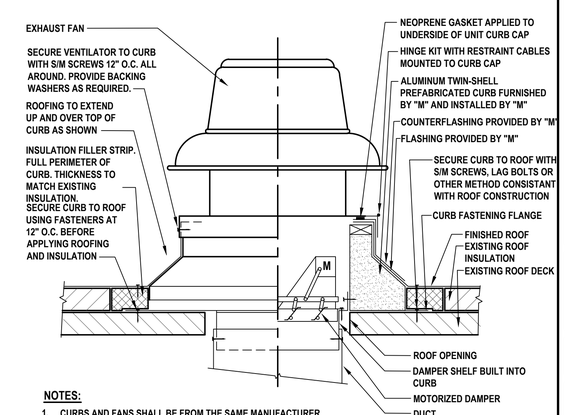

NOTES:

1. CURBS AND FANS SHALL BE FROM THE SAME MANUFACTURER
2. ROOF OPENING IN ACCORDANCE WITH MANUFACTURER'S APPROVED SHOP DRAWINGS
3. CURB HEIGHT SHALL BE 12" ABOVE FINISHED ROOF.

12 Roof Exhaust Fan & Curb

SCALE: NTS (DETAIL #)

H2M architects + engineers

538 Broad Hollow Road, 4th Floor East
Melville, NY 11747
631.756.8000 • www.h2m.com

CONSULTANTS:

MARK	DATE	DESCRIPTION

STATE OF NEW YORK · JOHN LAHEY · 101303 · LICENSED PROFESSIONAL ENGINEER

"ALTERATION OF THIS DOCUMENT EXCEPT BY A LICENSED PROFESSIONAL IS ILLEGAL"

DESIGNED BY:	DRAWN BY:	CHECKED BY:	REVIEWED BY:
DKR	DKR	MJV	JML

PROJECT No.:	DATE:	SCALE:
VGFD2001	JULY 2022	AS SHOWN

CLIENT

VAILS GATE FIRE DISTRICT

New Storage Building (Phase I)
New Fire Station (Phase II)

872 Blooming Grove Turnpike
New Windsor, NY 12553

CONTRACT

CONTRACT G
GENERAL CONSTRUCTION

STATUS

FINAL BID DOCUMENT

SHEET TITLE

HVAC DETAILS (3 OF 4)

DRAWING No.

M2 502.00

X:\VGFD\Vails Gate Fire Dept\VGFD2001-(Vails Gate FD New Firehouse)\02-BIM-CADD\Cmc-docs\hvac\M2.500.00 - Mechanical Details.dwg Last Modified: Jul 13, 2022 - 8:18pm Plotted on: Jul 15, 2022 - 12:59pm By dragone

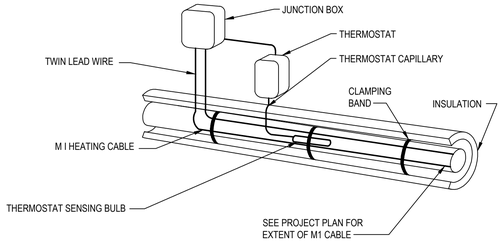

CONTROL INSTALLATION

NOTES:

1. THERMOSTAT SHALL HAVE CURRENT CARRYING CAPACITY OF 120% OF INSTALLED WATTAGE OR A CONTACTOR PANEL SHALL BE INSTALLED.
2. OUTDOOR INSTALLATION SHALL BE 2" THICK GLASS FIBRE INSULATION COVERED BY THREE LAYERS OF 15 LB FELT HOT MOPPED IN PLACE AND THENCE COVERED WITH AN ALUMINUM SHEATH OF 0.016" THICKNESS AND ALL PIPING EXPOSED TO THE WEATHER SHALL BE INSULATED IN THIS MANNER.

1 Typical Piping Heat Tracing Detail
SCALE: NTS

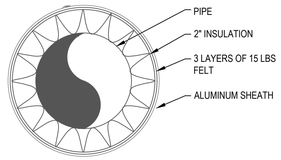

PIPE SECTION

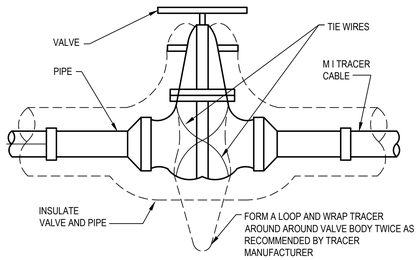

2 Typical Valve Tracing Pattern
SCALE: NTS

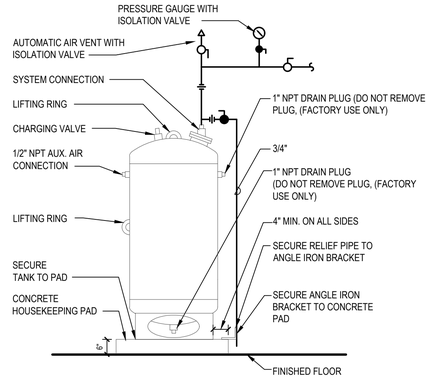

NOTE:

1. ADJUST FACTORY AIR CHARGE PRESSURE TO BUILDING OPERATING STATIC HEAD PRESSURE PRIOR TO FILLING TANK WITH WATER.

3 Diaphragm Expansion Tank
SCALE: NTS

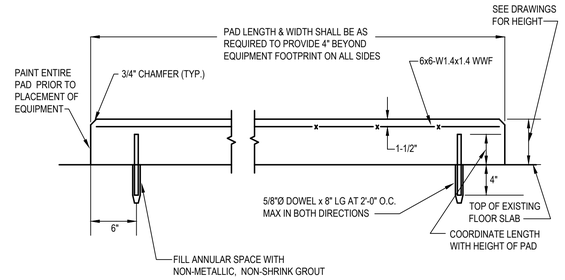

NOTES:

1. CONTRACTOR SHALL RETAIN THE SERVICES OF A UTILITY MARKOUT COMPANY TO LOCATE UTILITIES BENEATH THE SLAB PRIOR TO INSTALLING NEW DOWELS.

4 Typical Housekeeping Slab Section
SCALE: NTS

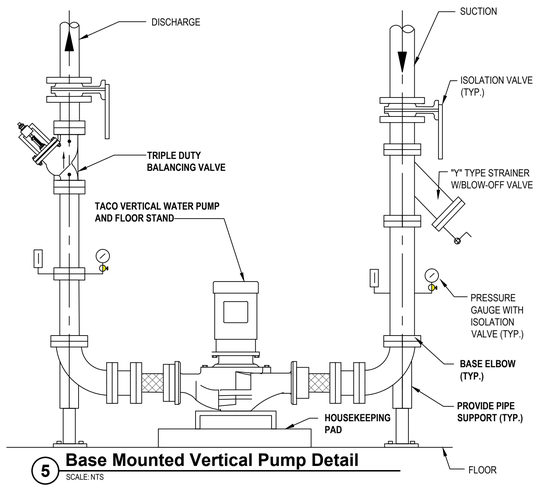

5 Base Mounted Vertical Pump Detail
SCALE: NTS

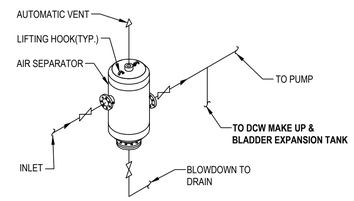

6 Air Separator
SCALE: NTS

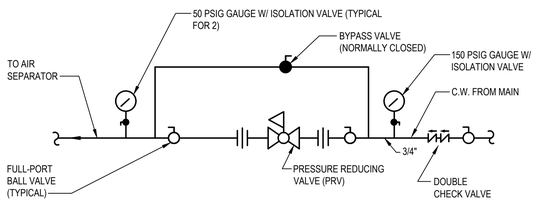

7 Make Up Water Assembly
SCALE: NTS

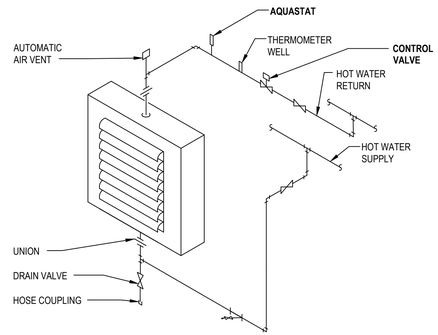

8 Hot Water Unit Heater Connections
SCALE: NTS

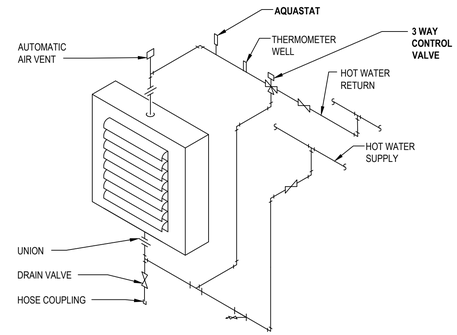

9 Hot Water Unit Heater Connections for UH-4
SCALE: NTS

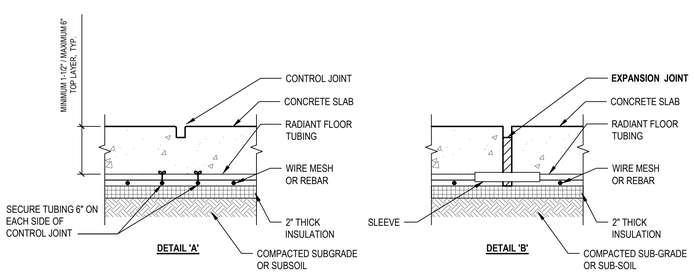

10 Radiant Floor Tubing Installation Detail
SCALE: NTS

NOTES:

1. DETAIL 'A' & 'B' FOR STAMPED CONCRETE SIDEWALK - STANDARD DUTY. SIMILAR FOR HANDICAP RAMPS, STAIRS, ETC.
2. DETAIL 'C' FOR CONCRETE PAVEMENT - HEAVY DUTY SUCH AS APP BAYS.
3. REFER TO STRUCTURAL DRAWINGS FOR SLAB CONSTRUCTION AND DETAILS.
4. THIS DETAIL PROVIDES GENERAL INSTALLATION REQUIREMENTS AND IS PROVIDED FOR REFERENCE ONLY. INSTALL TUBING ACCORDING TO SPECIFIC VENDER INSTRUCTION. IN CASE OF ANY CONFLICTING REQUIREMENTS, THE VENDOR REQUIREMENTS SHALL SUPERCEDE THIS DETAIL.

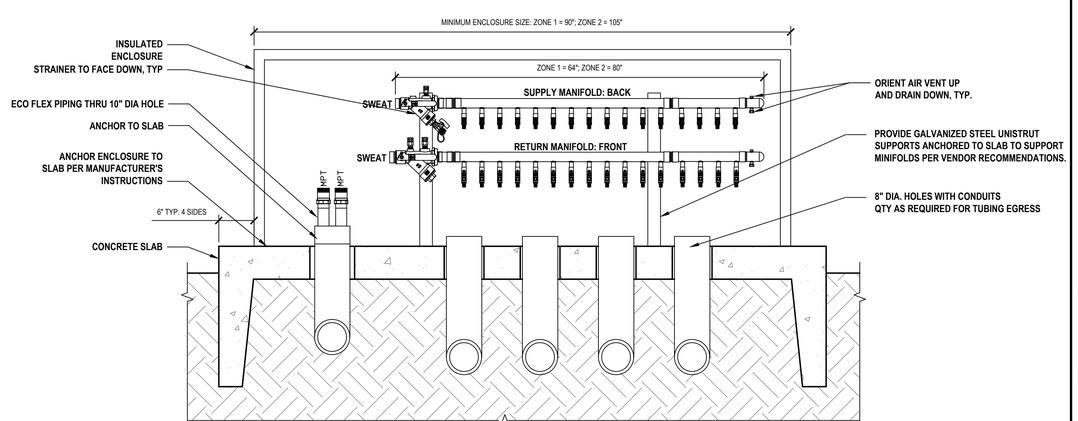

11 Radiant Floor Manifold Enclosure
SCALE: NTS

NOTES:

1. ALL DIMENSIONS AND QUANTITIES ARE FOR REFERENCE ONLY.
2. COORDINATE ENCLOSURE SIZE WITH EQUIPMENT AND REQUIRED SERVICE CLEARANCES.
3. COORDINATE LOCATION, SIZE AND QUANTITY OF PIPING/TUBING CONDUITS WITH APPROVED SNOW MELT VENDOR DESIGN DRAWINGS.
4. APPROXIMATE ENCLOSURE DEPTH = 30", HEIGHT = 50" (+/-).
5. COORDINATE CONCRETE PAD SIZE WITH ENCLOSURE SIZE.
6. REFER TO STRUCTURAL DRAWINGS FOR CONCRETE PAD DETAILS.
7. REFER TO CIVIL DRAWINGS AND SPECIFICATIONS FOR EXACT PAD LOCATIONS, UNDERGROUND UTILITIES, EXCAVATION, COMPACTION AND BACK-FILL REQUIREMENTS.

H2M architects + engineers
538 Broad Hollow Road, 4th Floor East
Melville, NY 11747
631.756.8000 • www.h2m.com

CONSULTANTS:

MARK	DATE	DESCRIPTION

STATE OF NEW YORK · JOHN LAMY · 101303 · LICENSED PROFESSIONAL ENGINEER

"ALTERATION OF THIS DOCUMENT EXCEPT BY A LICENSED PROFESSIONAL IS ILLEGAL"

DESIGNED BY:	DRAWN BY:	CHECKED BY:	REVIEWED BY:
DKR	DKR	MJV	JML
PROJECT No.: VGFD2001	DATE: JULY 2022	SCALE: AS SHOWN	

CLIENT

VAILS GATE FIRE DISTRICT

New Storage Building (Phase I)
New Fire Station (Phase II)

872 Blooming Grove Turnpike
New Windsor, NY 12553

CONTRACT

CONTRACT G
GENERAL CONSTRUCTION

STATUS

FINAL BID DOCUMENT

SHEET TITLE

HVAC DETAILS (4 OF 4)

DRAWING No.

M2 503.00

X:\VGFD\Vails Gate Fire Dept\VGFD2001-(Vails Gate FD-New Firehouse)\02-BIM-CADD\Civil-dwgs\Revit\M2 503.00 - Mechanical Details.dwg Last Modified: Jul 13, 2022 - 8:18pm Printed on: Jul 15, 2022 - 12:59pm By dragone

VENTILATION INDEX BASED ON 2020 NEW YORK STATE MECHANICAL CODE

ROOM NUMBER	ROOM NAME	OCCUPANCY CLASSIFICATION	FLOOR AREA (SF)	OCCUPANCY LOAD (PERSONS/1000 SF)	NUMBER OF OCCUPANTS	OCCUPANT BASED OA RATE (CFM/OCCUPANT)	AREA BASED OUTSIDE AIR RATE (CFM/SF)	EXHAUST RATE (CFM/SF)	FIXTURES	UNCORRECTED OA (CFM)	Ez EFFICIENCY FACTOR (HEATING)	CORRECTED OA [HEATING] (CFM)	EXHAUST REQUIRED (CFM)
101 / 223	APP BAY	GARAGE	5051	0	0	0	0.00	0.75	0	0	0.80	0	3788
	MEZZANINE	GARAGE	900	0	0	0	0.00	0.75	0	0	0.80	0	675
102	RADIO ROOM	OFFICE	158	5	1	5	0.06	0.00	0	14	0.80	18	0
103	STORAGE1	STORAGE	121	0	0	0	0.12	0.00	0	15	0.80	18	0
104	STORAGE2	STORAGE	97	0	0	0	0.12	0.00	0	12	0.80	15	0
105	DECON	TOILET	117	0	0	0	0.00	0.00	2	-	-	-	100
106	LAUNDRY	LAUNDRY	145	20	3	7	0.12	0.00	0	40	0.80	50	0
107	GEAR ROOM	LOCKER	735	0	0	0	0.00	0.25	0	-	-	-	184
108	TOILET	TOILET	67	0	0	0	0.00	0.00	1	-	-	-	50
109	SCBA	OFFICE	201	5	2	5	0.06	0.00	0	22	0.80	28	0
111	SPARE TURNOUT GEAR	STORAGE	65	0	0	0	0.06	0.00	0	4	0.80	5	0
112	VENDOR DROP OFF	CORRIDOR	45	0	0	0	0.06	0.00	0	3	0.80	3	0
113	CORRIDOR	CORRIDOR	556	0	0	0	0.06	0.00	0	33	0.80	42	0
114	QUARTERMASTER	OFFFICE	66	5	1	5	0.06	0.00	0	9	0.80	11	0
115	JC	JC	41	0	0	0	0.00	0.00	1	-	-	-	50
116	MEETING	CONFERENCE	3000	50	150	5	0.06	0.00	0	930	0.80	1163	0
117	STORAGE	STORAGE	126	0	0	0	0.06	0.00	0	15	0.80	19	0
118	KITCHEN	KITCHEN	433	20	9	7	0.12	0.70	0	119	0.80	149	303
119	PANTRY	STORAGE	66	0	0	0	0.06	0.00	0	4	0.80	5	0
120	READY ROOM	DAY ROOM	221	30	7	5	0.06	0.00	0	48	0.80	60	0
123	ELEVATOR LOBBY	CORRIDOR	45	0	0	0	0.06	0.00	0	3	0.80	3	0
125A	LOBBY	LOBBY	353	10	4	5	0.06	0.00	0	41	0.80	51	0
126	VESTIBULE	CORRIDOR	53	0	0	0	0.00	0.00	0	0	0.80	0	0
127	TOILET	TOILET	187	0	0	0	0.00	0.00	4	-	-	-	200
128	TOILET	TOILET	185	0	0	0	0.00	0.00	4	-	-	-	200
201	CORRIDOR	CORRIDOR	186	0	0	0	0.06	0.00	0	11	0.80	14	0
202	MEETING	CONFERENCE	381	50	20	5	0.06	0.00	0	123	0.80	154	0
203	MEMBER VESTIBULE	LOBBY/ PREUNCTION	126	30	4	7	0.06	0.00	0	38	0.80	47	0
203A	COMPANY ROOM	CONFERENCE	1082	50	55	5	0.06	0.00	0	340	0.80	425	0
203B	KITCHEN	KITCHEN	78	20	2	7	0.12	0.70	0	24	0.80	30	55
204	STORAGE	STORAGE	39	0	0	0	0.06	0.00	0	5	0.80	6	0
205	STORAGE	STORAGE	78	0	0	0	0.06	0.00	0	9	0.80	12	0
206	TRAINING ROOM	CONFERENCE	1005	50	51	5	0.06	0.00	0	315	0.80	394	0
207	EXERCISE ROOM	WEIGHT ROOM	1000	10	10	20	0.06	0.00	0	260	0.80	325	0
208	BATHROOM	BATHROOM	95	0	0	0	0.00	0.00	2	-	-	-	100
209	BATHROOM	BATHROOM	95	0	0	0	0.00	0.00	2	-	-	-	100
210	CORRIDOR	CORRIDOR	505	0	0	0	0.06	0.00	0	30	0.80	38	0
211	COMMISIONER'S OFFICE	OFFFICE	144	5	1	5	0.06	0.00	0	14	0.80	17	0
212	TRUSTEE'S OFFICE	OFFFICE	142	5	1	5	0.06	0.00	0	14	0.80	17	0
213	COMPANY OFFICERS	OFFFICE	118	5	1	5	0.06	0.00	0	12	0.80	15	0
214	ASST. CHIEF'S OFFICE	OFFFICE	118	5	1	5	0.06	0.00	0	12	0.80	15	0
215	CHIEF'S OFFICE	OFFFICE	115	5	1	5	0.06	0.00	0	12	0.80	15	0
216	ADMIN STORAGE	STORAGE	42	0	0	0	0.06	0.00	0	5	0.80	6	0
217	RATED STORAGE 1	STORAGE	82	0	0	0	0.06	0.00	0	10	0.80	12	0
218	RATED STORAGE 1	STORAGE	82	0	0	0	0.06	0.00	0	10	0.80	12	0
220	JC	JC	64	0	0	0	0.00	0.00	1	-	-	-	50

LOUVERS

EQMT. TAG	LOCATION	SERVING	PERFORMANCE/CONSTRUCTION REQUIREMENTS						BASIS OF DESIGN INFORMATION				NOTES
			CFM	EXT S. P. (IN. W.C.)	FACE VELOCITY (FPM)	FREE AREA (FT^2)	FRAME THICKNESS (IN.)	BLADE THICKNESS (IN.)	MNF	MODEL NO.	NOMINAL DIMENSIONS (W" x H" x D")	WEIGHT (LBS.)	
LV-1	APPARATUS BAY	APPARATUS BAY	2,250	0.03	431	5.13	.125	.081	GREENHECK	ESD-635	72 x 24 x 6	39	1,3
LV-2	APPARATUS BAY	APPARATUS BAY	2,250	0.03	431	5.13	.125	.081	GREENHECK	ESD-635	72 x 24 x 6	39	1,3
LV-3	WORK ROOM	APPARATUS BAY	4,500	0.12	954	4.78	.125	.081	GREENHECK	ESD-635	72 x 24 x 6	39	2-3
LV-4	GEAR ROOM	GEAR ROOM	200	0.07	671	0.29	.081	.081	GREENHECK	ESD-435	12 x 12 x 4	3	3-4
LV-5	BOILER ROOM	BOILER ROOM	N/A	N/A	N/A	4.07	.125	.081	GREENHECK	ESD-635	30 x 36 x 6	30	1,3
LV-6	ELEVAOR	ELEVATOR	N/A	N/A	N/A	1.82	.081	.081	GREENHECK	ESD-435	24 x 24 x 4	15	5-8

NOTES:
1. PROVIDE 24" SLEEVE WITH VCD-23 MOTORIZED DAMPER 115V/ 1 INTERLOCKED WITH OPERATION OF APPARATUS BAY GENERAL EXHAUST.
2. PROVIDE 18" SLEEVE.AND BLANK OFF PANEL.
3. PROVIDE WITH INTERNAL BIRSDCREEN.
4. PROVIDE 12" SLEEVE.
5. PROVIDE WITH (120V/1) VCD-23 MOTORIZED DAMPER W/ INTERNAL ACTUATOR
6. MOUNTING CLIPS TO REMOVE LOUVER AND ACCESS DAMPER FROM BUILDING EXTERIOR
7. DAMPER CONTROLLED BY THERMOSTAT SET TO OPEN DAMPER AT 90F
8. CONFIRM INSTALL WITH ELEVATOR MANUFACTURER

HIGH VOLUME LOW SPEED FANS

FAN NO.	AREA SERVED	BASIS OF DESIGN INFORMATION								REMARKS
		FAN/MOTOR RPM	MNF	MODEL NO.	NOMINAL DIMENSION (DIA" x H")	WEIGHT (LBS.)	ELECTRICAL DATA			
							VOLTS /PHASE	OPERATING AMPERAGE	MOTOR HP	
HVLS-1 THRU 3	APPARATUS BAY	148	BIG ASS FANS	BASIC6-10	120 x 46.5	135	208 / 3	10 A	1.0	1,2

NOTES:
1. MANUFACTURER TO PROVIDE VFD MOTOR.
2. PROVIDE BAFCON CONTROLLER SERVING ALL HVLS FANS IN AREA SERVED. PROVIDE MULTI-FAN KIT.

AIR OUTLETS

SYMBOL	BASIS OF DESIGN: MNF/ MODEL NO.	DESCRIPTION	FACE SIZE (IN)	AIR FLOW RANGE (CFM)	NECK SIZE (IN.)	REMARKS
SD-A (CFM)	NAILOR AUNI	SQUARE FACE CEILING DIFFUSER	24 X 24 OR 12 X 12, SEE DRAWINGS	0-200	6"Ø	1
				201-230	8"Ø	
				231-320	10"Ø	
				321 - 460	12"Ø	
SG-A (CFM)	NAILOR 61DV-O	DOUBLE DEFLECTION SUPPLY GRILLE	8 x 8	0-100	6 x 6	1
			12 x 8	101-225	10 x 6	
			14 x 8	226-290	12 x 6	
RG-A (CFM)	NAILOR 61FB45-O	RETURN GRILLE	24 X 24	0-1190	20 x 20	1,3
EG-A (CFM)	NAILOR 6145H-O	EXHAUST GRILLE	24 X 24 OR 12 X 12, SEE DRAWINGS	0-150	6x6	1
				151-420	12 x 10	
EG-B (CFM)	NAILOR 5145H-OA	EXHAUST GRILLE	24 X 24 OR 12 X 12, SEE DRAWINGS	0-100	6x6	1,2
				101-200	8x6	
				201-325	12x8	
EG-C (CFM)	NAILOR 5145H	EXHAUST GRILLE	24 x 24 OR 12 x 12, SEE DRAWINGS	N/A [MATCH DUCTWORK OR OPEN TO PLENUM]	N/A [MATCH DUCTWORK OR OPEN TO PLENUM]	1,2
EG-D (CFM)	NAILOR 6145HC	EXHAUST GRILLE	18 x 10	0-450	16 x 8	1

NOTES:
1. PROVIDE VOLUME DAMPERS FOR ALL AIR INLETS AND OUTLETS
2. ALL ALUMINUM CONSTRUCTION (TERMINAL AND DAMPER), PROVIDE ALUMINUM CONSTRUCTION IN SHOWER AREAS.
3. PROVIDE WITH 2" FILTER BOX AND MERV-8 FILTER.

VEHICLE GAS DETECTION SYSTEM

EQMT. NO.	LOCATION	SYSTEM SERVED	BASIS OF DESIGN INFORMATION				NOTES
			MNF	MODEL NO.	NOMINAL DIMENSIONS L" x W" x H"	VOLTS / PHASE	
GDS-2	APPARATUS BAY	GX-2	RKI BEACON	410A (4 CHANNEL)	10.5 x 6.5 x 14	120/1	1-7

NOTES:
1. INCLUDE FOUR CHANNEL DIGITAL CONTROLLER IN NEMA 4 ENCLOSURE FOR WALL MOUNT.
2. LED DISPLAY FOR ALL FOUR CHANNELS FOR NO2 AND CO
3. INCLUDE (2) NITROGEN DIOXIDE SENSORS AND (2) CARBON MONOXIDE SENSORS
4. PROVIDE CONFIGURABLE ALARM OUTPUTS WITH ISOLATION RELAYS FOR INTERLOCK WITH THE EF & FACP.
5. PROVIDE PANEL MOUNTED AUDIBLE ALARM AND SILENCING SWITCH
6. PROVIDE ALARM HORN WITH STROBE.
7. PROVIDE STARTUP, TEST AND CALIBRATION REPORT.

EXHAUST FANS

FAN NO.	SYSTEM SERVED	PERFORMANCE/CONSTRUCTION REQUIREMENTS				BASIS OF DESIGN INFORMATION						NOTES
		CFM	EXT S. P. (IN. W.C.)	FAN/MOTOR RPM	BHP	MNF	MODEL NO.	NOMINAL DIMENSION (DIA" x H") (L" x W" x H")	WEIGHT (LBS.)	ELECTRICAL DATA		
										VOLTS /PHASE	MOTOR HP	
GX-1	APPARATUS ROOM	4,250	0.60	728	2.52	GREENHECK	QEID-22	36.5 x 30 x 35.5	370	208V / 3	3	3,4,10
GX-2	APPARATUS ROOM	250	0.30	1,550	0.03	GREENHECK	SQ-090-VG	19 x 15 x 15	72	115V / 1	1/10	2-4,6,9
GX-3	GEAR ROOM	200	0.30	1,550	0.03	GREENHECK	SQ-090-VG	19 x 15 x 15	72	115V / 1	1/10	2,3,5,6
GX-4	KITCHEN	325	0.40	1,625	0.22	GREENHECK	G-080-VG	22Ø x 27	62	115V / 1	1/10	2,3,6-8
TX-1	TOILET EXHAUST	700	0.60	1,625	0.22	GREENHECK	G-098-VG	24.5Ø x 25.5	78	115V / 1	1/4	2,3,6-8
TX-2	APP BAY TOILET	100	0.25	1,550	0.02	GREENHECK	SQ-060-D	16 x 12 x 12	34	115V / 1	1/40	2,3,5
TX-3	DECON ROOM 105	100	0.25	1,550	0.02	GREENHECK	SQ-060-D	16 x 12 x 12	34	115V / 1	1/40	2,3,5
ERXF-122	ELECTRIC ROOM 122	58	0.34	1,550	0.02	GREENHECK	SQ-060-D	16 x 12 x 12	34	115V / 1	1/40	2,11,12

NOTES:
1. CONTRACTOR TO PROVIDE WITH DISCONNECT SWITCH.
2. MANUFACTURER PROVIDED DISCONNECT SWITCH.
3. PROVIDE WITH 115VAC (WITH 115 VAC TRANSFORMER) MOTORIZED DAMPER WITH END SWITCH.
4. FAN TO OPERATE BASED ON SIGNALS FROM INTERLOCKED TEMPERATURE SENSOR OR GAS DETECTIONS SYSTEM IN ADDITION TO 30-MINUTE SPRING TIMER.
5. ELECTRICAL TO INTERLOCK WITH LIGHT SWITCH.
6. PROVIDE WITH DIAL FOR BALANCING ONLY
7. PROVIDE 12" INSULATED ROOF CURB WITH BUILT-IN DAMPER TRAY.
8. ELECTRICAL TO PROVIDE TIME CLOCK
9. ELECTRICAL TO PROVIDE WALL SWITCH
10. REFER TO MOTORIZED DAMPER SCHEDULES
11. FAN TO OPERATE BASED ON THERMOSTAT IN SPACE
12. PROVIDE GRAVITY BACKDRAFT DAMPER

MOTORIZED DAMPERS

EQMT. TAG	PERFORMANCE/CONSTRUCTION REQUIREMENTS					BASIS OF DESIGN INFORMATION								REMARKS
	CFM	EXT S. P. (IN. W.C.)	FACE VELOCITY (FPM)	FRAME THICKNESS	FAILURE MODE	MNF	MODEL NO.	ACTUATOR MNF	ACTUATOR MODEL NO.	ACTUATOR COUNT	NOMINAL DIMENSIONS (W" x H" x D")	ELECTRICAL DATA		
												VOLTAGE	POWER DRAW (W)	
MD-1	4,250	0.095	905	16 GAGUE	CLOSED	GREENHECK	VCD-23	HONEYWELL	MS8104F1210	1	26 x 26 x 5	24VAC	18	1-4

NOTES:
1. TWO POSITION W/ SPRING RETURN
2. EXTERNALLY MOUNTED ACTUATOR, COORDINATE LOCATION IN FIELD
3. PROVIDE WITH STANDARD SLEEVE
4. INTERLOCK WITH OPERATION OF GX-1
5. ELECTRICAL CONTRACTOR TO PROVIDE 208V/3 TO 24VAC TRANSFORMER

AIR SCRUBBERS

EQUIPMENT NO.	LOCATION	PERFORMANCE/ CONSTRUCTION REQUIREMENTS					BASIS OF DESIGN INFORMATION				NOTES
		FAN DATA				FILTER DATA					
		AIR FLOW (CFM) [LO-MED-HI]	SOUND LEVEL (dBA) [LO-MED-HI]	VOLTS / PHASE	OPERATING CURRENT (A)	FILTER EFFICIENCY	MNF	MODEL NO.	NOMINAL DIMENSIONS L" x W" x H"	NOMINAL OPERATING WEIGHT (LBS.)	
LRS-1	GEAR ROOM	450 - 825 - 1,150	53 - 57 - 61	120V / 1	8.0	95% @ 0.3 MICRONS	HONEYWELL	F111C1012W-3S	48 x 24 x 21.5	198	1-3

NOTES:
1. PROVIDE WITH THREE SPEED SWITCH.
2. ELECTRICAL CONTRACTOR TO PROVIDE DISCONNECT SWITCH.
3. PROVIDE WITH CPZ ODOR ELIMINATION MODULE.

H2M architects + engineers
538 Broad Hollow Road, 4th Floor East
Melville, NY 11747
631.756.8000 • www.h2m.com

CONSULTANTS:

MARK	DATE	DESCRIPTION

STATE OF NEW YORK · JOHN LAHEY · 101303 · LICENSED PROFESSIONAL ENGINEER

"ALTERATION OF THIS DOCUMENT EXCEPT BY A LICENSED PROFESSIONAL IS ILLEGAL"

DESIGNED BY:	DRAWN BY:	CHECKED BY:	REVIEWED BY:
DKR	DKR	MJV	JML

PROJECT No.:	DATE:	SCALE:
VGFD2001	JULY 2022	AS SHOWN

CLIENT
VAILS GATE FIRE DISTRICT

New Storage Building (Phase I)
New Fire Station (Phase II)

872 Blooming Grove Turnpike
New Windsor, NY 12553

CONTRACT
CONTRACT G
GENERAL CONSTRUCTION

STATUS
FINAL BID DOCUMENT

SHEET TITLE
HVAC SCHEDULES (1 OF 3)

DRAWING No.
M2 600.00

X:\VGFD\Vails Gate Fire Dept\VGFD2001-\Vails Gate FD\New Firehouse\02-BIM-CADD\Cnc-docs\hvac\M600.00 - Mechanical Schedules.dwg Last Modified: Jul 15, 2022 - 3:09pm Plotted on: Jul 15, 2022 - 3:10pm By dragone

ROOFTOP UNITS

EQUIPMENT NO.	LOCATION	QUANTITY	AREA SERVED	PERFORMANCE/ CONSTRUCTION REQUIREMENTS																		BASIS OF DESIGN INFORMATION							NOTES
				SUPPLY FAN			OUTSIDE AIR FLOW (CFM)	COOLING COIL						HEATING COIL											ELECTRICAL DATA				
				MAXIMUM FLOW (CFM)	EXT. S.P. (IN W.G)	BHP		REFRIGERANT TYPE	TOTAL CAPACITY (MBH)	SENSIBLE CAPACITY (MBH)	EER	SEER	AIR DATA ENT. DB/WB (°F)	AIR DATA LVG. DB/WB (°F)	MIN TOTAL CAPACITY (MBH)	HOT WATER COIL FLOW RATE (GPM)	HOT WATER COIL EWT (°F)	HOT WATER COIL LWT (°F)	HOT WATER COIL COIL WATER ΔP (FT H20)	HOT WATER COIL EAT (°F)	HOT WATER COIL COIL LAT (°F)	MNF	MODEL NO.	NOMINAL DIMENSIONS LxWxH (IN.)	NOMINAL OPERATION WEIGHT (LBS)	VOLTS/ PHASE	SUPPLY FAN HP	UNIT MCA/MOCP	
RTU-207	ROOF	1	207 TRAINING ROOM	1,200	0.60	0.57	325	R-410A	33.0	26.7	12.2	14.7	80.0 / 67.0	59.4 / 58.4	65.6	4.4	150	119.9	0.8	55	105.1	TEMPMASTER	ZR037C00B2B6ACA1A2	89 x 59 x 42	962	208/3	1.50	41.3 / 50	1-18

NOTES:
1. 4" PLEATED MERV-13 FILTERS WITH FOUR (4) SETS OF SPARE FILTER MEDIA.
2. HINGED ACCESS DOORS.
3. DISCONNECT SWITCH (FACTORY MOUNTED).
4. DIRTY FILTER INDICATOR SWITCH.
5. POWERED CONVENIENCE OUTLET.
6. CONDENSER HAIL GUARD.
7. LOW LEAK COMPARATIVE ENTHALPY ECONOMIZER.
8. ELECTRICAL CONTRACTOR TO FURNISH AND WIRE SUPPLY AND RETURN AIR SMOKE DETECTORS. MECHANICAL CONTRACTOR TO INSTALL.
9. VERTICAL SUPPLY/RETURN CONNECTIONS
10. BACNET DDC COMMUNICATION. INTERLOCK WITH BMS.
11. 14" ROOF CURB AND THRU BASE ELECTRICAL CONNECTIONS.
12. PHASE MONITOR (PHASE LOSS PROTECTION.)
13. PROVIDE SPACE TEMPERATURE SENSOR(S) WITH DIGITAL DISPLAY, SETPOINT ADJUSTMENT, OCCUPANCY SCHEDULE.
14. SINGLE ZONE VARIABLE AIR VOLUME CONFIGURATION.
15. VARIABLE FREQUENCY DRIVE.
16. SINGLE POINT POWER FEED TO RTU AND CONVENIENCE OUTLET
17. HOT GAS REHEAT DEHUMIDIFICATION
18. TWO STAGES OF COOLING

DEDICATED OUTDOOR AIR UNITS

EQUIPMENT NO.	AREA SERVED	SUPPLY FAN					EXHAUST FAN					COOLING COIL								HEATING COIL									BASIS OF DESIGN INFORMATION						NOTES
		OUTSIDE AIR FLOW (CFM)	MOTOR HP	BHP	EXT. S.P. (IN W.C.)	TOTAL S.P. (IN W.C.)	AIR FLOW (CFM)	MOTOR HP	BHP	EXT. S.P. (IN W.C.)	TOTAL S.P. (IN W.C.)	REFRIGERANT TYPE	ISMRE	TOTAL SYSTEM CAPACITY (MBH)	SENSIBLE UNIT CAPACITY (MBH)	AIR DATA COIL AIR ΔP (IN. W.C.)	AIR DATA OA DB/WB (°F)	AIR DATA RA DB / WB (°F)	AIR DATA ENT. DB / WB (°F)	MIN TOTAL CAPACITY (MBH)	HOT WATER FLOW RATE (GPM)	HOT WATER EWT (°F)	HOT WATER LWT (°F)	HOT WATER COIL WATER ΔP (IN. W.C.)	HOT WATER OA DB (°F)	HOT WATER RA DB (°F)	HOT WATER EAT (°F)	HOT WATER MAX COIL LAT (°F)	HOT WATER UNIT LAT (°F)	MNF	MODEL NO.	NOMINAL DIMENSIONS L" x W" x H"	NOMINAL OPERATION WEIGHT (LBS)	ELECTRICAL DATA VOLTS/ PHASE	ELECTRICAL DATA MCA	ELECTRICAL DATA MOCP	
DOAS-1	1ST AND 2ND FLOOR VENTILATION	4,500	5	2.97	1.00	2.677	2,800	2	1.16	1.00	1.596	R-410A	6.8	206.9	143.7	0.24	95.0 / 75.0	75.0 / 63.0	84.2 / 69.2	55.1 / 54.7	75 / 50%	295.8	18.1	150	120	0.7	12.0	70.0	40.8	95.7	75	LG	ARDE-212-52-15H-15D	180.5 x 98.5 x 76.5	4,527	208/3	84.4	100	1-19

NOTES:
1. ENERGY RECOVERY WHEEL
2. HORIZONTAL DISCHARGE/EXHAUST CONFIGURATION
3. FACTORY PROVIDED INTEGRAL NONFUSED DISCONNECT
4. POWERED CONVENIENCE OUTLET
5. PROVIDE 14" ROOF CURB W/ THRU BASE CONNECTIONS
6. SINGLE POINT POWER FEED
7. BACNET DDC COMMUNICATION, INTEGRATE WITH BMS
8. FROST CONTROL (MODULATING WHEEL)
9. STAINLESS STEEL DRAIN PAN
10. DIRTY FILTER INDICATOR SWITCH
11. HAIL GUARDS
12. MODULATING HOT GAS REHEAT
13. DIGITAL SCROLL COMPRESSOR FOR ALL CIRCUITS
14. MANUFACTURER TO PROVIDE FACTORY INSTALLED UNIT CONTOLLER
15. PHASE/BROWN OUT PROTECTION
16. SUPPLY AIR FLOW MONITORING
17. 2" PLEATED MERV-8 FILTERS,PROVIDE WITH FOUR (4) SETS OF SPARE FILTER MEDIA.
18. ELECTRICAL CONTRACTOR TO FURNISH AND WIRE SUPPLY AND RETURN AIR SMOKE DETECTORS. MECHANICAL CONTRACTOR TO INSTALL.
19. HINGED ACCESS DOORS

SPLIT CONDENSING UNITS

EQMT. #	LOCATION	TYPE	INDOOR UNITS SERVED	REFRIGERANT	ESTIMATED CONDENSER CHARGE (LB)	COOLING PERFORMANCE TOTAL CAPACITY (MBH)	COOLING PERFORMANCE MIN OPER. TEMP. (°F)	COOLING PERFORMANCE MAX OPER. TEMP. (°F)	COOLING PERFORMANCE EER	COOLING PERFORMANCE IEER [SEER]	HEATING PERFORMANCE TOTAL CAPACITY (MBH) @ 0°F DB / -2F WB [-3°F DB / -4°F WB]	HEATING PERFORMANCE MIN OPER. TEMP. (°F)	HEATING PERFORMANCE MAX OPER. TEMP. (°F)	HEATING PERFORMANCE COP @ 47°F [HSPF]	HEATING PERFORMANCE COP @ 17°F	BASIS OF DESIGN INFORMATION MANUF.	MODEL #	NOMINAL DIMENSIONS L x W x H (IN.)	NOMINAL OPERATING WEIGHT (LBS.)	ELECTRICAL DATA VOLTS / PHASE / HZ	ELECTRICAL DATA MCA	ELECTRICAL DATA MOCP	NOTES
CU-1	ROOF	MULTI-ZONE HEAT RECOVERY	SEE EVAPORATOR UNIT SCHEDULE	R410A	26.5	168	5	122	11.1	21.9	163.8	-22	61	3.20	2.38	LG	ARUM168BTE5	49 x 30 x 67	639	208/60/3	53.6	70	1-8
CU-2	ROOF	MULTI-ZONE HEAT RECOVERY	SEE EVAPORATOR UNIT SCHEDULE	R410A	26.5	168	5	122	11.1	21.9	163.7	-22	61	3.20	2.38	LG	ARUM168BTE5	49 x 30 x 67	639	208/60/3	53.6	70	1-8
OU-1	ROOF	1 TO 1 HEAT PUMP	IU-1	R410A	2.21	13.8	14	118	12.5	22.7	[10.36]	-4	65	[11.4]	-	LG	LSU120HSV5	30.5 x 12.5 x 21.5	74	208-230/60/1	10.0	15	1-4,7,8

NOTES:
1. REFRIGERANT CHARGE IS SOLELY PRE-CHARGE FROM CONDENSERS. CONTRACTOR TO NOTIFY ENGINEER IF ADDITIONAL SYSTEM CHARGE IS REQUIRED.
2. ELECTRICAL CONTRACTOR TO PROVIDE DISCONNECT SWITCH FOR OUTDOOR UNIT IN NEMA-4X ENCLOSURE.
3. PROVIDE AND INSTALL REFRIGERANT PIPING SPECAIALTIES PER MANUFACTURER'S RECCOMENDATIONS.
4. CONTRACTOR TO PROVIDE 14" HIGH RAILS.
5. MANUFACTURER TO PROVIDE HAIL GUARD KIT
6. MANUFACTURER PROVIDED AIR GUIDE
7. MANUFACTURER PROVIDED LOW AMBIENT BAFFLE KIT
8. MANUFACTURER PROVIDED BASE PAN HEATER

SPLIT EVAPORATING UNITS

UNIT TAG	UNIT LOCATION	TYPE	PAIRED EQUIPMENT		REFRIGERANT	PERFORMANCE/ CONSTRUCTION REQUIREMENTS SUPPLY UNIT DATA DRY AIRFLOW (CFM) [HI-MED-LO]	EXTERNAL STATIC (IN. W.C.) [HI TO LO]	SOUND LEVEL LOW TO HIGH dB(A)	NOMINAL SIZE (MBH)	TOTAL COOLING CAPACITY (MBH)	SENSIBLE COOLING CAPACITY (MBH)	HEATING CAPACITY (MBH) @ 0°F DB / -2F WB [-3°F DB / -4°F WB]	BASIS OF DESIGN INFORMATION MANUF.	MODEL	NOMINAL DIMENSIONS L" x W" x H"	NOMINAL OPERATING WEIGHT (LBS.)	ELECTRICAL DATA VOLTS/ PHASE/ HZ	ELECTRICAL DATA MCA (A)	ELECTRICAL DATA MOCP (A)	NOTES
EU-102	RADIO ROOM 102	CEILING CASSETTE	BC-1	CU-1	R410A	396-388-353	-	34/35/37	18	19.15	13.82	22.2	LG	ARNU183TQD4	24.5 x 24.5 x 10	35	208/1/60	0.25	15	1-6
EU-114	114 QUARTERMASTER	CEILING CASSETTE			R410A	265-247-212	-	26/27/29	5	5.52	3.90	6.3	LG	ARNU053TRD4	22.5 x 22.5 x 8.5	29	208/1/60	0.25	15	1-6
EU-118	118 KITCHEN	CEILING CASSETTE			R410A	396-388-353	-	34/35/37	18	19.15	13.82	22.2	LG	ARNU183TQD4	24.5 x 24.5 x 10	35	208/1/60	0.25	15	1-6
EU-120	120 READY ROOM	CEILING CASSETTE			R410A	283-265-251	-	27/29/30	9	9.63	6.91	11.2	LG	ARNU093TRD4	24.5 x 24.5 x 10	32	208/1/60	0.25	15	1-6
FCU-116-1	116 MEETING	CONCEALED FAN COIL	BC-2		R410A	1554-676	0.71 - 0.16	60/62/65	36	36.31	26.84	42.0	LG	ARNU363M2A4	27.5 x 54 x 11	86	208/1/60	2.90	15	1-6
FCU-116-2	116 MEETING	CONCEALED FAN COIL			R410A	1554-676	0.71 - 0.16	60/62/65	36	36.31	26.84	42.0	LG	ARNU363M2A4	27.5 x 54 x 11	86	208/1/60	2.90	15	1-6
FCU-116-3	116 MEETING	CONCEALED FAN COIL			R410A	1554-676	0.71 - 0.16	60/62/65	36	36.31	26.84	42.0	LG	ARNU363M2A4	27.5 x 54 x 11	86	208/1/60	2.90	15	1-6
EU-125A	125A LOBBY	CEILING CASSETTE			R410A	307-283-247	-	27/30/32	12	12.34	8.91	14.1	LG	ARNU123TRD4	24.5 x 24.5 x 10	32	208/1/60	0.25	15	1-6
EU-202	202 MEETING	CEILING CASSETTE	BC-3	CU-1	R410A	396-388-353	-	34/35/37	18	19.15	13.82	22.2	LG	ARNU183TQD4	24.5 x 24.5 x 10	35	208/1/60	0.25	15	1-6
EU-203	203 VESTIBULE	CEILING CASSETTE			R410A	265-247-212	-	26/27/29	5	5.52	3.90	6.3	LG	ARNU053TRD4	22.5 x 22.5 x 8.5	29	208/1/60	0.25	15	1-6
FCU-203A	203A COMPANY ROOM	CONCEALED FAN COIL			R410A	2076-522	0.79 - 0.16	62/64/67	48	48.24	36.16	56.0	LG	ARNU483M3A4	27.5 x 50.5 x 12	96.10	208/1/60	3.10	15	1-6
FCU-206	206 TRAINING	CONCEALED FAN COIL			R410A	1554-676	0.71 - 0.16	60/62/65	36	36.31	26.84	42.0	LG	ARNU363M2A4	27.5 x 54 x 9	86	208/1/60	2.90	15	1-6
EU-210	210 CORRIDOR	CEILING CASSETTE	BC-4		R410A	283-265-251	-	27/29/30	9	9.63	6.91	11.2	LG	ARNU093TRD4	24.5 x 24.5 x 10	32	208/1/60	0.25	15	1-6
EU-211	211 OFFICE	CEILING CASSETTE			R410A	265-247-212	-	26/27/29	5	5.52	3.90	6.3	LG	ARNU053TRD4	22.5 x 22.5 x 8.5	29	208/1/60	0.25	15	1-6
EU-212	212 OFFICE	CEILING CASSETTE			R410A	265-247-212	-	26/27/29	5	5.52	3.90	6.3	LG	ARNU053TRD4	22.5 x 22.5 x 8.5	29	208/1/60	0.25	15	1-6
EU-213	213 OFFICE	CEILING CASSETTE			R410A	265-247-212	-	26/27/29	5	5.52	3.90	6.3	LG	ARNU053TRD4	22.5 x 22.5 x 8.5	29	208/1/60	0.25	15	1-6
EU-214	214 OFFICE	CEILING CASSETTE			R410A	265-247-212	-	26/27/29	5	5.52	3.90	6.3	LG	ARNU053TRD4	22.5 x 22.5 x 8.5	29	208/1/60	0.25	15	1-6
EU-215	215 OFFICE	CEILING CASSETTE			R410A	265-247-212	-	26/27/29	5	5.52	3.90	6.3	LG	ARNU053TRD4	22.5 x 22.5 x 8.5	29	208/1/60	0.25	15	1-6
IU-1	219 IT	WALL MOUNT	OU-1		R410A	338-317-229	-	39/33/23	12	13.785	-	[10.36]	LG	LSN120HSV5	30 x 12 x 7.5	18.30	208-230/1/60	-	-	1-3,5-8

NOTES:
1. MANUFACTURER TO PROVIDE HARDWIRED, WALL MOUNTED, PROGRAMMABLE THERMOSTAT.
2. PROVIDE WITH 208V / 1 CONDENSATE PUMP TAGGED AS CDP-A (LITTLE GIANT MODEL VCCA-20ULST)
3. DRAIN PAIN LEVEL SENSOR THE UNIT SHALL TURN OFF IF WATER IS SENSED.
4. ELECTRICAL CONTRACTOR TO PROVIDE DISCONNECT SWITCH
5. FURNISH AND INSTALL BACNET INTERFACE AND INTEGRATE WITH BMS.
6. INSTALL ALL EQUIPMENT AND COMPONENTS ACCORDING TO MANUFACTURER'S INSTRUCTIONS.POWERED BY PAIRED CONDENSER,
7. ELECTRICAL CONTRACTOR TO PROVIDE DISCONNECT SWITCH BETWEEN INDOOR AND OUTDOOR UNIT
8. PROVIDE PIPE COVER FOR ALL EXPOSED REFRIGERANT PIPING. PROVIDE CJ INNOVATIONS OR APPROVED EQUAL. COORDINATE FINISH WITH ARCHITECT/OWNER.

VRF BRANCH CONTROL BOXES

EQMT NO.	LOCATION	CNDSR. PAIRING	# OF INDOOR UNIT PORTS	BASIS OF DESIGN INFORMATION MNF	MODEL NO.	NOMINAL DIMENSIONS L" x W" x H"	NOMINAL OPERATING WEIGHT (LBS.)	ELECTRICAL DATA VOLTS/ PHASE	ELECTRICAL DATA MCA	ELECTRICAL DATA MOCP	NOTES
BC-1	FIRST FLOOR	CU-1	4	LG	PRHR043A	19 x 19 x 8.5	40	208-230/1	0.17	15	1, 2
BC-2	FIRST FLOOR	CU-2	4	LG	PRHR043A	19 x 19 x 8.5	40	208-230/1	0.17	15	1, 2
BC-3	SECOND FLOOR	CU-3	4	LG	PRHR043A	19 x 19 x 8.5	40	208-230/1	0.17	15	1, 2
BC-4	SECOND FLOOR	CU-3	6	LG	PRHR063A	31 x 19 x 8.5	60	208-230/1	0.27	15	1, 2

NOTES:
1. PROVIDE BALL VALVES
2. CONDENSATE DRAIN NOT REQUIRED FOR THIS MANUFACTURER

ELECTRIC HEAT TRACE

EQMT. TAG	EQMT. SERVED	SERVING	DESIGN CONDITIONS NOMINAL PIPE SIZE (IN.)	MINIMUM OA TEMP. (°F)	PIPE TEMP. SETPOINT (°F)	STARTUP PIPE TEMP. (°F)	INSULATION THICKNESS (IN.)	INSULATION TYPE	INSULATION APPROXIMATE LENGTH REQUIRED (FT)	BASIS OF DESIGN INFORMATION MNF	MODEL NO.	ELECTRICAL DATA POWER OUTPUT (W/FT)	ELECTRICAL DATA POWER (W)	ELECTRICAL DATA VOLTS/ PHASE	ELECTRICAL DATA MOCP	NOTES
HT-D	HHWS/R	DOAS-1	2	-10	40	35	2	FIBERGLASS	30'	THEMOM	5-FLX-2	5	150	208/1	20	1-2
HT-208	HHWS/R	RTU-208	1	-10	40	35	1-1/2	FIBERGLASS	30'	THEMOM	5-FLX-2	5	150	208/1	20	1-2
HT-MAU	HHWS/R	MAU-1	1	-10	40	35	1-1/2	FIBERGLASS	30'	THEMOM	5-FLX-2	5	150	208/1	20	1-2

NOTES:
1. PROVIDE ALL REQUIRED TEMPERATURE SENSORS AND CONTROLS FOR A COMPLETELY FUNCTIONING HEAT TRACE SYSTEM.
2. HEAT TRACE ASSOCIATED HOT WATER PIPING OUTDOORS, VALVES AND FITTINGS AS REQUIRED.

CONDENSATE DRAIN PUMPS

EQMT. NO.	SYSTEM SERVED	PERFORMANCE/CONSTRUCTION REQUIREMENTS FLUID	MAX FLOW RATE (GPH)	MAX HEAD (FT.)	HP	BASIS OF DESIGN INFORMATION MNF	MODEL NO.	DIMS. L x W x H	WEIGHT (LBS.)	VOLTS/ PHASE	POWER DRAW (W)	NOTES
CDP-A	SEE PLANS	WATER	48	10	1/30	LITTLE GIANT	VCCA-20ULST	11 X 5 X 7	6.3	115V/1	93	1-3

NOTES:
1. UL RATED
2. OVERFLOW DETECTION SWITCH
3. 1/2 GALLON COLLECTION TANK

REFRIGERANT DENSITY CALCS

SYSTEM	EFFECTIVE PIPE LENGTH (FT.)	EFFECTIVE FURTHEST PIPE RUN (FT.)	TOTAL NUMBER OF ELBOWS	TOTAL REFRIGERANT AMOUNT (LBS)	ZONE SMALLEST SPACE, TOTAL AREA (SQFT.)	ZONE SMALLEST SPACE, TOTAL VOLUME (FT³)	REFRIGERANT DENSITY (LB/1000FT³)
CU-1 & 2	-	-	-	39.15 [NOTE 1]	503	4,024	19.64
	-	-	-	39.82 [NOTE 1]			
OU-1	88	88	0	3.34	42	336	9.91

NOTES:
1. LINE LENGTHS ARE ESTIMATED BY MANUFACTURER VRF DESIGN SOFTWARE. REFRIGERANT LINE LENGTHS, SIZES & CHARGES TO BE VERIFIED BY EQUIPMENT MANUFACTURER.
2. CONTRACTOR TO NOTIFY ENGINEER IF ADDITIONAL SYSTEM CHARGE IS REQUIRED.

H2M architects + engineers
538 Broad Hollow Road, 4th Floor East
Melville, NY 11747
631.756.8000 • www.h2m.com

CONSULTANTS:

MARK	DATE	DESCRIPTION

STATE OF NEW YORK · JOHN LAHEY · 101303 · LICENSED PROFESSIONAL ENGINEER

"ALTERATION OF THIS DOCUMENT EXCEPT BY A LICENSED PROFESSIONAL IS ILLEGAL"

DESIGNED BY:	DRAWN BY:	CHECKED BY:	REVIEWED BY:
DKR	DKR	MJV	JML

PROJECT No.:	DATE:	SCALE:
VGFD2001	JULY 2022	AS SHOWN

CLIENT
VAILS GATE FIRE DISTRICT

New Storage Building (Phase I)
New Fire Station (Phase II)

872 Blooming Grove Turnpike
New Windsor, NY 12553

CONTRACT
CONTRACT G
GENERAL CONSTRUCTION

STATUS
FINAL BID DOCUMENT

SHEET TITLE
HVAC SCHEDULES (2 OF 3)

DRAWING No.
M2 601.00

X:\VGFD\Vails Gate Fire Dept\VGFD2001-Vails Gate FD New Firehouse\02-BIM-CAD\Cons-docs\hvac\M 600.00 - Mechanical Schedules.dwg Last Modified: Jul 15, 2022 - 12:34pm Plotted on: Jul 15, 2022 - 12:35pm By dragone

HEATING HOT WATER BOILERS

EQUIPMENT NO.	LOCATION	RATEF GROSS INPUT (MBH)	RATED GROSS OUTPUT (MBH)	GAS (%)	PERFORMANCE/ CONSTRUCTION REQUIREMENTS								BASIS OF DESIGN INFORMATION								NOTES
					WATER DATA				GAS DATA			BOILER VENT SIZE (IN)	MANUFACTURER	MODEL NO.	NOMINAL DIMENSIONS (L x W x H)	WEIGHT (LBS.)	ELECTRICAL DATA				
					FLOW RATE (GPM)	MAX RATED PRESS. (PSIG)	INLET TEMP. (DEG. F)	OUTLET TEMP. (DEG. F)	CFH	MIN PRESSURE (IN. W.C.)	MAX PRESSURE (IN. W.C.)						VOLTAGE	FLA	MCA	MOCP	
BL-1 & BL-2	MECHANICAL ROOM	800	768.8	96.1	45.3	80	114	150	800	4	13.5	6	RIELO	ARRAY 800	29.5 x 52.5 x 53.5	926	115V/1	15.5	16	20	1-7

NOTES:
1. ASME RELIEF VALVE – SET AT 50 PSI
2. SINGLE POINT POWER FEED.
3. PROVIDE MULTIPLE LOW WATER CUTOFFS.
4. PROVIDE INTERLOCKS FOR GAS DETECTION AND BREAK GLASS STATION
5. PROVIDE CONDENSATE TRAP AND TRANSPARENT NEUTRALIZATION KIT.
6. PROVIDE MAINTENANCE KIT FOR EACH BOILER.
7. OUTSIDE AIR TEMPERATURE SENSOR.
8. CONTROLLED BY BMS

WALL MOUNTED ELECTRIC HEATERS

EQMT. NO.	LOCATION	PERFORMANCE/ CONSTRUCTION REQUIREMENTS					BASIS OF DESIGN INFORMATION				NOTES
		FLOW (CFM)	TOTAL CAPACITY (MBH)	HEATING COIL DATA			MNF	MODEL NO.	NOMINAL DIMENSIONS L" x W" x H"	NOMINAL OPERATING WEIGHT (LBS.)	
				ELECTRIC DATA							
				VOLTS/PHASE	TOTAL KW	AMPS					
WEH-112	112 VENDOR DROPOFF	100	5.1	208/1	1.5	7.2	QMARK / MARLEY	AWH4404F*	16 x 4 x 19.5	25	1-3

NOTES:
1. BUILT IN THERMOSTAT.
2. MANUFACTURER PROVIDED DISCONNECT SWITCH
3. FIELD WIRED FOR HALF WATTAGE, COORDINATE WITH 'E' AND MANUFACTURER'S INSTALLATION INSTRUCTIONS.

HEATING HOT WATER PUMPS

EQMT. NO.	LOCATION	SYSTEM SERVED	PERFORMANCE/CONSTRUCTION REQUIREMENTS					BASIS OF DESIGN INFORMATION					REMARKS
			WORKING FLUID	FLOW RATE (GPM)	TOTAL HEAD (FT.)	HP	PUMP SPEED (RPM)	MNF	MODEL NO.	NOMINAL DIMENSIONS L x W x H	NOMINAL OPERATING WEIGHT (LBS.)	VOLTS/ PHASE	
HHWP-1&2	MECHANICAL ROOM	BUILDING HW HEAT	WATER	70	65	3.0	1,760	TACO	SKV-1506D-A-2P-PD	22x10x30	246	208/3	1-9
HHWP-3&4	MECHANICAL ROOM	RADIANT FLOOR	WATER	28	40	0.9	-	TACO	VR15H	10x7x15.5	226	208/1	2,4-6,8-10
HHWP-5&6	MECHANICAL ROOM	UNIT HEATERS	WATER	20	35	0.6	-	TACO	VR15M	10x7x15	226	208/1	2,4-6,8-10

NOTES:
1. OPEN DRIP PROOF MOTOR
2. ANSI CLASS 125
3. MANUFACTURER TO PROVIDE DISCONNECT SWITCH.
4. MANUFACTURER PROVIDED VFD.
5. SELF SENSING
6. INTERLOCK WITH BMS
7. PROVIDE WITH BASE STAND AND SUPPLEMENTAL STEEL AS REQUIRED
8. PROVIDE SD020015-5 SUCTION DIFFUSER
9. PROVIDE MPV 015-4 MULTIPURPOSE VALVE
10. ELECTRICAL CONTRACTOR TO PROVIDE DISCONNECT SWITCH

GAS DETECTION SYSTEM

EQMT. NO.	LOCATION	SYSTEM SERVED	BASIS OF DESIGN INFORMATION				REMARKS
			MNF	MODEL NO.	NOMINAL DIMENSIONS L" x W" x H"	VOLTAGE / PHASE	
GDS-1	MECHANICAL ROOM	BOILERS BL-1, BL-2	RKI BEACON	410A (4 CHANNEL)	10.5 x 6.5 x 14	120/1	1-7

NOTES:
1. INCLUDE TWO CHANNEL DIGITAL CONTROLLER IN NEMA 4 ENCLOSURE FOR WALL MOUNT.
2. LED DISPLAY FOR LEL AND CO.
3. INCLUDE COMBUSTIBLE GAS SENSOR AND CARBON MONOXIDE SENSOR.
4. PROVIDE CONFIGURABLE ALARM OUTPUTS WITH ISOLATION RELAYS FOR INTERLOCK WITH BOILER AND FACP.
5. PROVIDE PANEL MOUNTED AUDIBLE ALARM AND SILENCING SWITCH
6. PROVIDE ALARM HORN WITH STROBE
7. PROVIDE STARTUP, TEST AND CALIBRATION REPORT

RADIANT FLOOR MANIFOLDS

EQMT. NO.	AREA SERVED	FLOOR AREA SERVED [FT^2]	PERFORMANCE/CONSTRUCTION REQUIREMENTS								NOTES
			TOTAL CAPACITY (BTU/HR)	HEATING COIL DATA				MNF	MODEL NO.	NOMINAL DIMENSIONS L"xW"xH"	
				HOT WATER COIL							
				EWT (°F)	GPM	CIRCUITS					
RFM-1	APPARATUS ROOM	2429	99621	123.6	9.7	10		UPONOR	A2721002	28 x 3.5 x 14.5	1-5
RFM-2	APPARATUS ROOM	2503	102663	123.6	10	10		UPONOR	A2721002	28 x 3.5 x 14.5	1-5
RFM-3	APPARATUS ROOM	266	8902	123.6	0.9	2		UPONOR	A2720202	11 x 3.5 x 14.5	1-5
RFM-4	APPARATUS ROOM	805	25634	123.6	2.4	4		UPONOR	A2720402	15 x 3.5 x 14.5	1-5
RFM-5	APPARATUS ROOM	260	6376	123.6	0.6	2		UPONOR	A2720202	11 x 3.5 x 14.5	1-5
RFM-6	APPARATUS ROOM	217	6973	123.6	0.7	2		UPONOR	A2720202	11 x 3.5 x 14.5	1-5
RFM-7	APPARATUS ROOM	229	6320	123.6	0.6	2		UPONOR	A2720202	11 x 3.5 x 14.5	1-5

NOTES:
1. MANIFOLD TO BE CONSTRUCTED OF STAINLESS STEEL

AIR/DIRT SEPARATORS

EQMT. NO.	LOCATION	SYSTEM SERVED	PERFORMANCE REQUIREMENTS		BASIS OF DESIGN INFORMATION				NOTES
			FLOW RATE (GPM)	MAX. PD (FT. H2O)	MNF	MODEL NO.	NOMINAL DIMENSION DIA. x H	NOMINAL OPERATING WEIGHT (LBS.)	
ADS-1	BOILER ROOM	HOT WATER LOOPS	118	1.07	TACO	4904AD-125	12 x 25	75	1-2

NOTES:
1. AIR VENT
2. BLOW DOWN PIPED TO DRAIN

EXPANSION TANKS

EQUIPMENT NO.	LOCATION	SYSTEM SERVED	PERFORMANCE/CONSTRUCTION REQUIREMENTS			BASIS OF DESIGN INFORMATION					REMARKS
			SYSTEM DATA								
			ESTIMATED VOLUME (GAL.)	MAX. OPERATING PRESS. RANGE (PSIG)	MAX. OPERATING TEMP. RANGE (°F)	MNF	MODEL NO.	NOMINAL DIMENSION DIA. x H	TANK VOLUME (GAL.)	SHIPPING WEIGHT (LBS.)	
ET-1	BOILER ROOM	HOT WATER	500	17-47	40-150	TACO	CA140-150	16 x 40.5	37	195	1

NOTES:
1. CHARGE OF EXPANSION TANK SHALL BE ADJUSTED TO MATCH THE PRESSURE AT THE POINT WHERE THE TANK IS CONNECTED TO THE PIPING.

FIN TUBE RADIATOR

EQMT. NO.	AREA SERVED	PERFORMANCE / CONSTRUCTION REQUIREMENTS								REMARKS
		TOTAL CAPACITY (MBH)	HEATING COIL DATA					MNF	MODEL NO.	NOMINAL DIMENSIONS L"xW"xH"	
			HOT WATER COIL								
			BTU/FT	PIPE DIA	FINS/FT	FIN DIMS W" x H"	GPM				
FTR-116-1	116 MEETING	5.2	516	3/4"	50	4.25 X 4.25	2.5	MODINE	S012	10' x 5.25" 12"	1-2
FTR-116-2	116 MEETING	5.2	516	3/4"	50	4.25 X 4.25	2.5	MODINE	S012	10' x 5.25" 12"	1-2
FTR-116-3-1	116 MEETING	4.1	516	3/4"	50	4.25 X 4.25	2.5	MODINE	S012	8' x 5.25" 12"	1-2
FTR-116-3-2	116 MEETING	4.1	516	3/4"	50	4.25 X 4.25	2.5	MODINE	S012	8' x 5.25" 12"	1-2
FTR-116-4	116 MEETING	9.3	516	3/4"	50	4.25 X 4.25	2.5	MODINE	S012	18' x 5.25" 12"	1-2
FTR-116-5	116 MEETING	8.3	516	3/4"	50	4.25 X 4.25	2.5	MODINE	S012	16' x 5.25" 12"	1-2
FTR-120-1	120 READY ROOM	4.1	516	3/4"	50	4.25 X 4.25	2.5	MODINE	S012	8' x 5.25" 12"	1-2
FTR-120-2	120 READY ROOM	2.1	516	3/4"	50	4.25 X 4.25	2.5	MODINE	S012	4' x 5.25" 12"	1-2
FTR-202-1	202 CONFERENCE	5.2	516	3/4"	50	4.25 X 4.25	2.5	MODINE	S012	10' x 5.25" 12"	1-2
FTR-202-2	202 CONFERENCE	5.2	516	3/4"	50	4.25 X 4.25	2.5	MODINE	S012	10' x 5.25" 12"	1-2
FTR-203A-1	COMPANY ROOM 203A	6.2	516	3/4"	50	4.25 X 4.25	2.5	MODINE	S012	12' x 5.25" 12"	1-2
FTR-203A-2	COMPANY ROOM 203A	6.2	516	3/4"	50	4.25 X 4.25	2.5	MODINE	S012	12' x 5.25" 12"	1-2
FTR-203A-3	COMPANY ROOM 203A	3.1	516	3/4"	50	4.25 X 4.25	2.5	MODINE	S012	6' x 5.25" 12"	1-2
FTR-203A-4	COMPANY ROOM 203A	2.1	516	3/4"	50	4.25 X 4.25	2.5	MODINE	S012	4' x 5.25" 12"	1-2
FTR-203A-5	COMPANY ROOM 203A	1.5	516	3/4"	50	4.25 X 4.25	2.5	MODINE	S012	3' x 5.25" 12"	1-2
FTR-206-1	TRAINING ROOM 206	6.2	516	3/4"	50	4.25 X 4.25	2.5	MODINE	S012	12' x 5.25" 12"	1-2
FTR-206-2	TRAINING ROOM 206	2.1	516	3/4"	50	4.25 X 4.25	2.5	MODINE	S012	4' x 5.25" 12"	1-2
FTR-206-3	TRAINING ROOM 206	2.6	516	3/4"	50	4.25 X 4.25	2.5	MODINE	S012	5' x 5.25" 12"	1-2
FTR-206-4	TRAINING ROOM 206	2.6	516	3/4"	50	4.25 X 4.25	2.5	MODINE	S012	5' x 5.25" 12"	1-2
FTR-210-1	CORRIDOR 210	10.3	516	3/4"	50	4.25 X 4.25	2.5	MODINE	S012	20' x 5.25" 12"	1-2
FTR-210-2	CORRIDOR 210	5.2	516	3/4"	50	4.25 X 4.25	2.5	MODINE	S012	10' x 5.25" 12"	1-2
FTR-212	211 OFFICE	4.1	516	3/4"	50	4.25 X 4.25	2.5	MODINE	S012	8' x 5.25" 12"	1-2
FTR-213	212 OFFICE	4.1	516	3/4"	50	4.25 X 4.25	2.5	MODINE	S012	8' x 5.25" 12"	1-2
FTR-214	213 OFFICE	2.6	516	3/4"	50	4.25 X 4.25	2.5	MODINE	S012	5' x 5.25" 12"	1-2
FTR-215	214 OFFICE	3.1	516	3/4"	50	4.25 X 4.25	2.5	MODINE	S012	6' x 5.25" 12"	1-2
FTR-216	215 OFFICE	3.1	516	3/4"	50	4.25 X 4.25	2.5	MODINE	S012	6' x 5.25" 12"	1-2

NOTES:
1. PROVIDE ALL CORNER SECTIONS, END PANELS, SUPPORTS AND ACCESSORIES AS REQUIRED TO PROVIDE CONTINUOUS ENCLOSE.
2. PROVIDE SPACE MOUNTED THERMOSTAT AND CONTROL VALVE (Cv = 4.6 MINIMUM).

CONTROL VALVES

EQMT. NO.	QTY.	PERFORMANCE/CONSTRUCTION REQUIREMENTS													NOTES
		VALVE FAMILY	CONFIG.	FAIL POSITION	VALVE SIZE	MEDIUM	VALVE COEFFICIENT (CV)	VALVE CLOSE OFF (PSI)	TRIM MATERIAL	CONNECTION	MNF.	MODEL NUMBER	ACTUATOR POWER	ACTUATOR CONTROL	
MV-1	1	BALL VALVE	3-WAY	LAST POSITION	1-1/2"	WATER	23.5	40	BRASS	THREADED	GRISWOLD CONTROLS	UR3EEFBM	24VAC	2-10VDC MODULATING	

" VIBRATION ISOLATION / SEISMIC & WIND RESTRAINTS SCHEDULE [2020 New York State Building Code, SDC = C, RISK CAT = IV"]

UNIT TAG	EQUIPMENT TYPE	"LOCATION (FL LEVEL)"	MOUNTING METHOD	BASE TYPE	MANUF	ISOLATOR TYPE	NOM. DEFL., IN.	RESTRAINT REQ'D	SEISMIC COMPONENT IMPORTANCE FACTOR, Ip	NOTES (1,2, TYP.)
HVLS-1,2,3	HVLS FANS	VARIOUS	SUSPENDED	---	VIBRO-ACOUSTICS	---	---	SEIS	1.5	6
GX-1	EXHAUST FANS	MECH MEZ	SUSPENDED	---	VIBRO-ACOUSTICS	SHR	2.00	SEIS	1.5	6,7
GX-4, TX-1	EXHAUST FANS	ROOF	ROOF	---	VIBRO-ACOUSTICS	---	---	SEIS/WIND	1.5	
VX [TBD]	VEHICLE EXHAUST	MECH MEZ	SUSPENDED	---	VIBRO-ACOUSTICS	SHR	2.00	SEIS	1.5	6,7
LRS-1	AIR SCRUBBERS	GEAR ROOM	SUSPENDED	---	VIBRO-ACOUSTICS	---	---	SEIS	1.5	6
RTU-207, DOAS-1	ROOFTOP UNITS	ROOF	ROOF	RC	VIBRO-ACOUSTICS	VCR	2.00	SEIS/WIND	1.5	
CU-1, 2, OU-1	CONDENSING UNIT	ROOF	ROOF	---	VIBRO-ACOUSTICS	NP	0.18	SEIS/WIND	1.5	
EU-102 THRU 215	SPLIT SYSTEM INDOOR	VARIOUS	SUSPENDED	---	VIBRO-ACOUSTICS	SHR	1.00	SEIS	1.5	6, 7
BC-1, 2, 3, 4	VRF BRANCH CONTROL	VARIOUS	SUSPENDED	---	VIBRO-ACOUSTICS	---	---	SEIS	1.5	6
BL-1, 2	BOILER	MECH ROOM	FLOOR	---	VIBRO-ACOUSTICS	NP	0.18	SEIS	1.5	4,5
HHWP1 THRU 6	PUMPS	MECH ROOM	FLOOR	CIB	VIBRO-ACOUSTICS	SFS+ SIPS	2.00	SEIS	1.5	4,5
ADS-1	AIR DIRT SEPARATOR	MECH ROOM	SUSPENDED		VIBRO-ACOUSTICS			SEIS	1.5	6
ET-1	EXPANSION TANK	MECH ROOM	FLOOR		VIBRO-ACOUSTICS			SEIS	1.5	
CUH-A, B, 126	CABINET UNIT HEATER	VARIOUS	SUSPENDED		VIBRO-ACOUSTICS	SHR	2.00	SEIS	1.5	6, 7
UH-1 THRU 4	UNIT HEATER	VARIOUS	SUSPENDED		VIBRO-ACOUSTICS	SHR	2.00	SEIS	1.5	6, 8
KITCHEN HOOD	KITCHEN HOOD	KITCHEN	SUSPENDED		VIBRO-ACOUSTICS			SEIS	1.5	6
MAU-118	MAKE-UP AIR	ROOF	ROOF	RC	VIBRO-ACOUSTICS	VCR	2.00	SEIS/WIND	1.5	
KX-118	EXHAUST FANS	ROOF	ROOF	---	VIBRO-ACOUSTICS	---	---	SEIS/WIND	1.5	6,7
DUCTWORK (≥ 6' CLEAR AREA)	DUCTWORK	VARIOUS	SUSPENDED	---	VIBRO-ACOUSTICS			SEIS	1.5	
HVAC PIPING (>2" NOMINAL DIAMETER)	PIPING	VARIOUS	SUSPENDED	---	VIBRO-ACOUSTICS			SEIS	1.5	

NOTES:
1. BASIS OF DESIGN: VIBRO-ACOUSTICS.
2. SEISMICALLY RATED FOR PROJECT CONDITIONS.
3. STAND SUPPORT MUST BE ABLE TO MEET CALCULATED SEISMIC LOADS
4. PROVIDE FLEXIBLE PIPING CONNECTORS
5. PROVIDE TYPE SHR OR SFS ISOLATORS ON ADJACENT PIPING/DUCTWORK.
6. PROVIDE SEISMIC RESTRAINT CABLES. PROVIDE ROD STIFFENERS AS REQUIRED.
7. PROVIDE SEISMIC UPLIFT STOP WASHER.
8. SUPPORT INLINE PUMP AT FLANGE CONNECTION.

BASE TYPE:
CIB - CONCRETE INERTIA BASE
VCR - ADJUSTABLE SPRING CURB
RC: ROOF CURB

ISOLATOR TYPE:
NP - RUBBER PAD
SIPS - SEISMIC INLINE PUMP STANDS
SFS - SEISMIC FLOOR MOUNT
SHR - SPRING + RUBBER HANGER

CABINET UNIT HEATERS

EQMT NO.	LOCATION	CONFIGURATION	FAN DATA			TOTAL CAPACITY (MBH)	AIR DATA		HEATING COIL DATA				BASIS OF DESIGN INFORMATION				NOTES
									WATER								
			FLOW (CFM)	HP	VOLTS/ PHASE		ENT. DB TEMP. (DEG. F)	LVG. DB TEMP. (DEG. F)	ENT. TEMP. (DEG. F)	LVG. TEMP. (DEG. F)	FLOW (GPM)	MAX. P.D. (FT. H2O)	MNF	MODEL NO.	NOMINAL DIMENSIONS L x W x H	NOMINAL OPERATING WEIGHT (LBS.)	
CUH-A	STAIR A	STANDALONE CABINET	280	0.03	115V/1	10.2	70	98	150	122.1	1.5	0.20	MODINE	C 0030	44 x 9.5 x 25	90	1,2
CUH-B	STAIR B	CEILING MOUNTED	280	0.03	115V/1	10.2	70	98	150	122.1	1.5	0.20	MODINE	CW 0035	44 x 9.5 x 25	100	2,3
CUH-126	VESTIBULE 126	CEILING MOUNTED	280	0.03	115V/1	10.2	70	98	150	122.1	1.5	0.20	MODINE	CW 0035	44 x 9.5 x 25	100	2,3

NOTES:
1. UNIT MOUNTED THERMOSTAT.
2. MANUFACTURER PROVIDED UNIT MOUNTED DISCONNECT SWITCH.
3. REMOTE MOUNTED THERMOSTAT

HOT WATER UNIT HEATERS

EQUIPMENT NO.	AREA SERVED	BASIS OF DESIGN																					NOTES
		FAN DATA		TOTAL CAPACITY (MBH)	AIR DATA				HEATING COIL DATA				ELECTRIC DATA			MNF	MODEL NO.	NOMINAL DIMENSIONS L"xW"xH"	NOMINAL OPERATING WEIGHT (LBS.)	MAX MOUNTING HEIGHT (FT)	
									HOT WATER COIL												
		FLOW (CFM)	RPM		EAT (°F)	LAT (°F)	THROW (FT)	FPM	EWT (°F)	LWT (°F)	GPM	ΔP (FT W.C.)	VOLTS/ PHASE	AMPS	HP						
UH-1 THRU 4	APPARATUS ROOM	3,240	1,075	69.7	60	80	53	870	150	120	4.8	1.3	115/1	4.6	1/3	MODINE	HC 165SB01SA	29.5 x 19 x 26.5	92	25	1-5

NOTES:
1. MANUFACTURER TO PROVIDE T1P STARTER DISCONNECT SWITCH TO BE INSTALLED BY ELECTRICAL CONTRACTOR.
2. ELECTRICAL TO PROVIDE WITH LINE VOLTAGE WALL MOUNTED THERMOSTAT.
3. MANUFACTURER TO PROVIDE WITH AQUASTAT.
4. MANUFACTURER TO PROVIDE WITH CEILING SUSPENSION KIT.
5. INTERLOCK WITH APPARATUS BAY DOORS

H2M architects + engineers
538 Broad Hollow Road, 4th Floor East
Melville, NY 11747
631.756.8000 • www.h2m.com

CONSULTANTS:

MARK	DATE	DESCRIPTION
2	12/22/2022	REVS. PER TOWN COMMENTS

STATE OF NEW YORK · JOHN L. REID · 101303 · LICENSED PROFESSIONAL ENGINEER

"ALTERATION OF THIS DOCUMENT EXCEPT BY A LICENSED PROFESSIONAL IS ILLEGAL"

DESIGNED BY:	DRAWN BY:	CHECKED BY:	REVIEWED BY:
DKR	DKR	MJV	JML

PROJECT No.:	DATE:	SCALE:
VGFD2001	JULY 2022	AS SHOWN

CLIENT
VAILS GATE FIRE DISTRICT

New Storage Building (Phase I)
New Fire Station (Phase II)

872 Blooming Grove Turnpike
New Windsor, NY 12553

CONTRACT
CONTRACT G
GENERAL CONSTRUCTION

STATUS
FINAL BID DOCUMENT

SHEET TITLE
HVAC SCHEDULES (3 OF 3)

DRAWING No.
M2 602.02

X:\VGFD (Vails Gate Fire Dept)\VGFD2001-Vails Gate FD-New Firehouse\02-BIM-CADD\Con-docs\hvac\M 600.00 - Mechanical Schedules.dwg Last Modified: Dec 22, 2022 - 3:56pm Plotted on: Dec 22, 2022 - 3:57pm By: dragone

PATENT NUMBERS

AC-PSP (UNITED STATES) - US PATENT 7963830 B2.
AC-PSP WALL (CANADA) - CA PATENT 2820509.
AC-PSP ISLAND (CANADA) - CA PATENT 2520330.

HOOD INFORMATION - JOB#5338935

HOOD NO	TAG	MODEL	MANUFACTURER	LENGTH	MAX COOKING TEMP	TYPE	APPLIANCE DUTY	DESIGN CFM/FT	TOTAL EXH CFM	EXHAUST PLENUM RISER(S) WIDTH	LENG	HEIGHT	DIA	CFM	VEL	SP	TOTAL SUPPLY CFM	HOOD CONSTRUCTION	HOOD CONFIG END TO END	ROW
1		5424 ND-2-PSP-F	CAPTIVEAIRE	6' 0"	600 DEG	I	HEAVY	195	1170			4"	10"	1170	2145	-0.936"	983	430 SS WHERE EXPOSED	ALONE	ALONE

HOOD INFORMATION

HOOD NO	TAG	FILTER(S) TYPE	QTY	HEIGHT	LENGTH	EFFICIENCY @ 7 MICRONS	LIGHT(S) QTY	TYPE	WIRE GUARD	UTILITY CABINET(S) LOCATION	SIZE	FIRE SYSTEM TYPE	SIZE	ELECTRICAL MODEL #	SWITCHES QUANTITY	FIRE SYSTEM PIPING	HOOD HANGING WEIGHT
1		CAPTRATE SOLO FILTER	4	16"	16"	85% SEE FILTER SPEC	2	RECESSED ROUND	NO	LEFT	12"x54"x24"	TANK FS	4.0	DCV-1111	1 LIGHT 1 FAN	YES	704 LBS

HOOD OPTIONS

HOOD NO	TAG	OPTION
1		FIELD WRAPPER 18.00" HIGH FRONT, LEFT, RIGHT.
		BACKSPLASH 80.00" HIGH X 84.00" LONG 430 SS VERTICAL.
		RIGHT VERTICAL END PANEL 27" TOP WIDTH, 21" BOTTOM WIDTH, 80" HIGH INSULATED 430 SS.
		LEFT VERTICAL END PANEL 27" TOP WIDTH, 21" BOTTOM WIDTH, 80" HIGH INSULATED 430 SS.
		SENSOR-CV.

PERFORATED SUPPLY PLENUM(S)

HOOD NO	TAG	POS	LENGTH	WIDTH	HEIGHT	TYPE	RISER(S) WIDTH	LENG	DIA	CFM	SP
1		Front	84"	14"	6"	MUA	12"	20"		491	0.133"
						MUA	12"	20"		491	0.133"

FIRE SYSTEM INFORMATION - JOB#5338935

FIRE SYSTEM NO	TAG	TYPE	SIZE	FLOW POINTS	INSTALLATION SYSTEM	LOCATION ON HOOD
1		TANK FS	4.0	16	FIRE CABINET LEFT	LEFT, HOOD 1

GAS VALVE(S)

FIRE SYSTEM NO	TAG	TYPE	SIZE	SUPPLIED BY
1		SC ELECTRICAL	2.000	CAPTIVEAIRE SYSTEMS

FIRE SYSTEM PARTS LIST KEY

FIRE SYSTEM NO	TAG	KEY NUMBER - PART DESCRIPTION	QTY BY FACTORY	QTY BY DIST
1		0 - 0 - 12-F28021-32144-OT-360 DUCT FIRE THERMOSTAT WITH 12 FOOT WIRE LEADS. NO, CLOSE ON TEMP RISE AT 360°F.	1	0
		0 - 0 - 87-300001-001 TANK - PRESSURIZED TANK USED FOR TANK FIRE SUPPRESSION.	1	0
		0 - 0 - 87-300030-001 PRIMARY ACTUATOR KIT (PAK) - ACTUATOR AND RELEASE SOLENOID ASSEMBLY, ONE NEEDED PER FIRE SYSTEM, SUPERVISED, TANK FIRE SUPPRESSION.	1	0
		0 - 0 - 87-300152-001 HARDWARE, SVA BOLTS, TANK FIRE SUPPRESSION.	4	0
		0 - 0 - 98694A115 HARDWARE, DATANKLOCK LOCKING BRACKET SQUARE NUTS 5/16" ZINC, TANK FIRE SUPPRESSION.	2	0
		0 - 0 - A0034332 JUNCTION BOX FOR MANUAL PULL STATION. 1.5" DEEP BACK BOX, RED COLOR.	1	0
		0 - 0 - DATANKLOCK DISCHARGE ADAPTER TANK LOCKING PLATE FOR FIRE SYSTEM TANK INSTALLATION IN UTILITY CABINETS, TANK FIRE SUPPRESSION.	1	0
		0 - 0 - SLPCON-10FT SUPERVISED LOOP CONNECTION KIT. CONTAINS THE PARTS NEEDED TO CONNECT THE SUPERVISED LOOP BETWEEN END TO END HOODS WITH LESS THAN A 9" GAP OR BACK TO BACK HOODS. KIT CONTAINS 12 FEET OF BLACK MG WIRE, 12 FEET OF TAN MG WIRE, 10 FEET OF FLEXIBLE CONDUIT, AND TWO 7/8" CONNECTORS.	1	0
		0 - 0 - TANK STRAP TANK STRAP - USED FOR TANK FIRE SUPPRESSION.	3	0
		0 - 0 - TFS-UCTANKBRACKET TANK BRACKET FOR FIRE SYSTEM TANK INSTALLATION IN UTILITY CABINETS, TANK FIRE SUPPRESSION.	1	0
		0 - 0 - WK-283952-000 DISCHARGE ADAPTER, TANK FIRE SUPPRESSION.	1	0
		34 - 34 - A0034331 24VDC SINGLE ACTION MANUAL ACTUATION DEVICE (PUSH/PULL STATION) WITH PROTECTIVE COVER, ONE (1) NORMALLY OPEN CONTACT. RED COLOR.	1	0
		ADDITIONAL PARTS TO BE DETERMINED...		

SPECIFICATION: CAPTRATE® GREASE-STOP® SOLO FILTER

THE CAPTRATE GREASE-STOP SOLO FILTER IS A SINGLE-STAGE FILTER FEATURING A UNIQUE S-BAFFLE DESIGN IN CONJUNCTION WITH A SLOTTED REAR BAFFLE DESIGN, TO DELIVER EXCEPTIONAL FILTRATION EFFICIENCY.

FILTER IS STAINLESS STEEL CONSTRUCTION, AND SIZED TO FIT INTO STANDARD 2-INCH DEEP HOOD CHANNEL(S).

UNITS SHALL INCLUDE STAINLESS STEEL HANDLES AND A FASTENING DEVICE TO SECURE THE TWO COMPONENTS WHEN ASSEMBLED.

GREASE EXTRACTION EFFICIENCY PERFORMANCE SHALL REMOVE AT LEAST 75% OF GREASE PARTICLES FIVE MICRONS IN SIZE, AND 85% GREASE PARTICLES SEVEN MICRONS IN SIZE AND LARGER, WITH A CORRESPONDING PRESSURE DROP NOT TO EXCEED 1.0 INCHES OF WATER GAUGE.

THE CAPTRATE GREASE-STOP SOLO WAS TESTED TO ASTM STANDARD ASTM F2519-05. MANUFACTURER APPROVED FOR USE IN SOLID FUEL APPLICATIONS AS A SPARK ARRESTER.

EFFICIENCY VS. PARTICLE DIAMETER

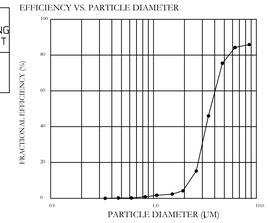

PRESSURE DROP VS. FLOW RATE

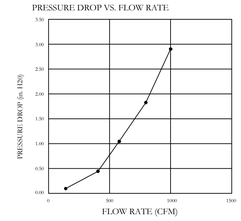

CAPTRATE FILTERS ARE BUILT IN COMPLIANCE WITH:
NFPA #96.
NSF STANDARD #2.
UL STANDARD #1046.
INT. MECH. CODE (IMC).
ULC-S649.

RTD SENSOR INSTALLATION (IF NOT FACTORY INSTALLED)

NOTES: One RTD per Exhaust Fan
: RTD has 3 wires that connect to control cabinet

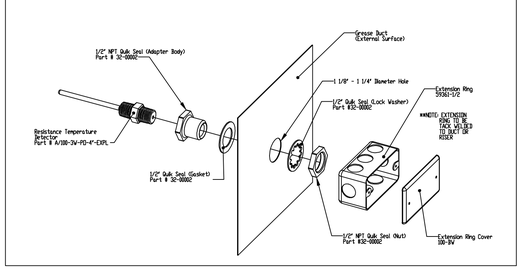

SUPPLY PLENUM
HANGING ANGLE
(HARDWARE BY INSTALLER)

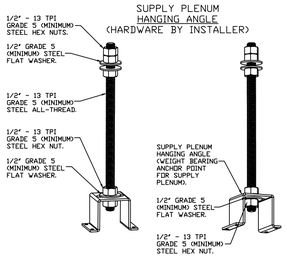

ASSEMBLY INSTRUCTIONS

HANGING ANGLE MUST BE SUPPORTED WITH 1/2" - 13 TPI GRADE 5 (MINIMUM) ALL-THREAD. SANDWICH HANGING ANGLES AND CEILING ANCHOR POINTS WITH 1/2" GRADE 5 (MINIMUM) STEEL FLAT WASHERS AND 1/2" - 13 TPI GRADE 5 (MINIMUM) HEX NUTS AS SHOWN. MUST USE DOUBLED HEX NUT CONFIGURATION ABOVE CEILING ANCHORS. SINGLE HEX NUT BENEATH HANGING ANGLE IS ACCEPTABLE FOR PSP HANGING ANGLES. MAINTAIN 1/4" OF EXPOSED THREADS BENEATH BOTTOM HEX NUT. TORQUE ALL HEX NUTS TO 57 FT-LBS.

HOOD CORNER
HANGING ANGLE
(HARDWARE BY INSTALLER)

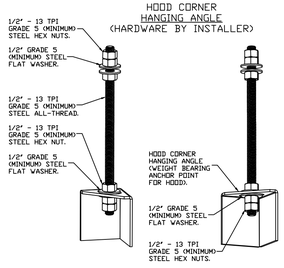

ASSEMBLY INSTRUCTIONS

HANGING ANGLE MUST BE SUPPORTED WITH 1/2" - 13 TPI GRADE 5 (MINIMUM) ALL-THREAD. SANDWICH HANGING ANGLES AND CEILING ANCHOR POINTS WITH 1/2" GRADE 5 (MINIMUM) STEEL FLAT WASHERS AND 1/2" - 13 TPI GRADE 5 (MINIMUM) HEX NUTS AS SHOWN. MUST USE DOUBLED HEX NUT CONFIGURATION BENEATH HOOD HANGING ANGLES AND ABOVE CEILING ANCHORS. MAINTAIN 1/4" OF EXPOSED THREADS BENEATH BOTTOM HEX NUT. TORQUE ALL HEX NUTS TO 57 FT-LBS.

FULL LENGTH
HANGING ANGLE
(HARDWARE BY INSTALLER)

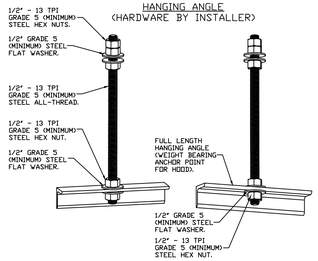

ASSEMBLY INSTRUCTIONS

HANGING ANGLE MUST BE SUPPORTED WITH 1/2" - 13 TPI GRADE 5 (MINIMUM) ALL-THREAD. SANDWICH HANGING ANGLES AND CEILING ANCHOR POINTS WITH 1/2" GRADE 5 (MINIMUM) STEEL FLAT WASHERS AND 1/2" - 13 TPI GRADE 5 (MINIMUM) HEX NUTS AS SHOWN. MUST USE DOUBLED HEX NUT CONFIGURATION ABOVE CEILING ANCHORS. SINGLE HEX NUT BENEATH HANGING ANGLE IS ACCEPTABLE FOR FULL LENGTH HANGING ANGLES. MAINTAIN 1/4" OF EXPOSED THREADS BENEATH BOTTOM HEX NUT. TORQUE ALL HEX NUTS TO 57 FT-LBS.

H2M architects + engineers
538 Broad Hollow Road, 4th Floor East
Melville, NY 11747
631.756.8000 • www.h2m.com

CONSULTANTS:

MARK	DATE	DESCRIPTION

STATE OF NEW YORK · JOHN LAHEY · 101303 · LICENSED PROFESSIONAL ENGINEER

"ALTERATION OF THIS DOCUMENT EXCEPT BY A LICENSED PROFESSIONAL IS ILLEGAL"

DESIGNED BY:	DRAWN BY:	CHECKED BY:	REVIEWED BY:
DKR	DKR	MJV	JML

PROJECT No.:	DATE:	SCALE:
VGFD2001	JULY 2022	AS SHOWN

CLIENT
VAILS GATE FIRE DISTRICT

New Storage Building (Phase I)
New Fire Station (Phase II)

872 Blooming Grove Turnpike
New Windsor, NY 12553

CONTRACT
CONTRACT G
GENERAL CONSTRUCTION

STATUS
FINAL BID DOCUMENT

SHEET TITLE
HVAC KITCHEN SCHEDULES (1 OF 10)

DRAWING No.
M2 610.00

X:\VGFD\Vails Gate Fire Dept\VGFD2001 (Vails Gate FD New Firehouse)\02-BIM-CADD\Con-docs\hvac\M2 610.00 - Kitchen Schedules.dwg Last Modified: Jul 15, 2022 - 12:33pm Plotted on: Jul 15, 2022 - 12:33pm By: dragone

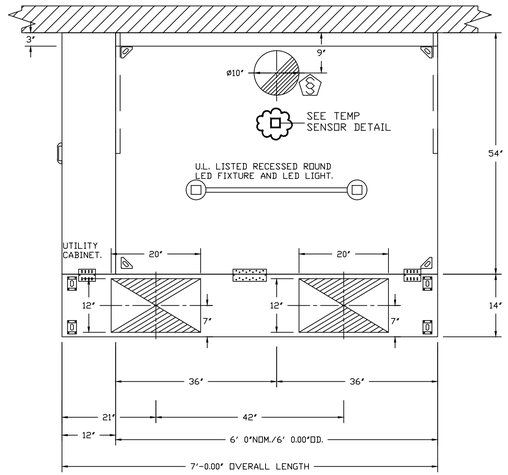

PLAN VIEW – HOOD #1
6' 0.00" LONG 5424ND-2-PSP-F

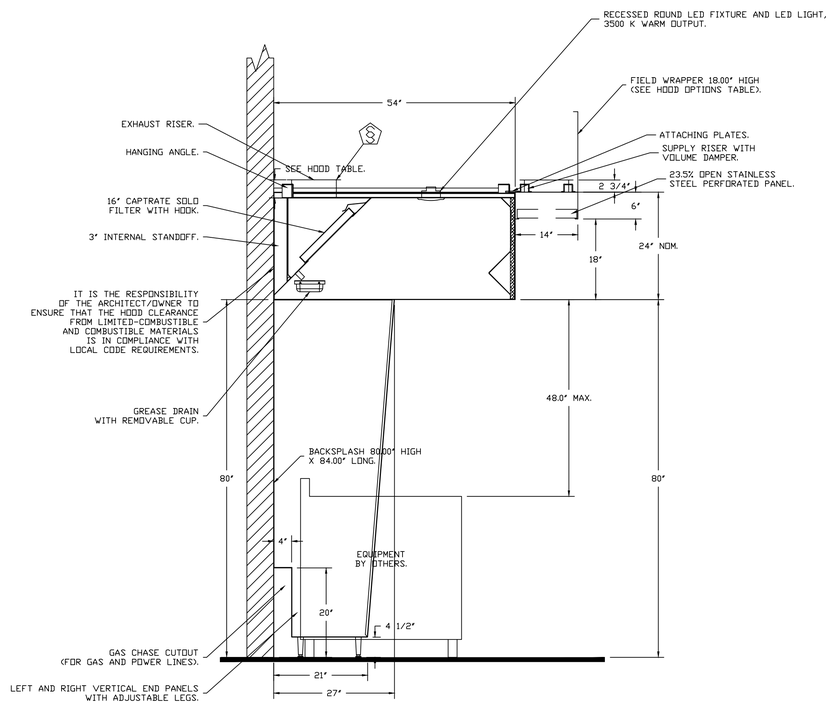

SECTION VIEW – MODEL 5424ND-2-PSP-F
HOOD – #1

H2M architects + engineers

538 Broad Hollow Road, 4th Floor East
Melville, NY 11747
631.756.8000 • www.h2m.com

CONSULTANTS:

MARK	DATE	DESCRIPTION

STATE OF NEW YORK · JOHN LAHEY · 101303 · LICENSED PROFESSIONAL ENGINEER

"ALTERATION OF THIS DOCUMENT EXCEPT BY A LICENSED PROFESSIONAL IS ILLEGAL"

DESIGNED BY:	DRAWN BY:	CHECKED BY:	REVIEWED BY:
DKR	DKR	MJV	JML
PROJECT No.: VGFD2001	DATE: JULY 2022	SCALE: AS SHOWN	

CLIENT

VAILS GATE FIRE DISTRICT

New Storage Building (Phase I)
New Fire Station (Phase II)

872 Blooming Grove Turnpike
New Windsor, NY 12553

CONTRACT

CONTRACT G
GENERAL CONSTRUCTION

STATUS

FINAL BID DOCUMENT

SHEET TITLE

HVAC KITCHEN SCHEDULES (2 OF 10)

DRAWING No.

M2 611.00

X:\VGFD\Vails Gate Fire Dept\VGFD2001-\Vails Gate FD\New Firehouse\02-BIM-CADD\Cnc-docs\hvac\M2 610.00 - Kitchen Schedules.dwg Last Modified: Jul 15, 2022 - 12:33pm Plotted on: Jul 15, 2022 - 1:00pm By:dragone

EXHAUST FAN INFORMATION – JOB#5338935

FAN UNIT NO	TAG	QTY	FAN UNIT MODEL #	MANUFACTURER	CFM	ESP	RPM	MOTOR ENCL	HP	BHP	PHASE	VOLT	FLA	DISCHARGE VELOCITY	WEIGHT (LBS)	SONES
1	KX-118	1	DU85HFA	CAPTIVEAIRE	1170	1.500	1391	TEAO-ECM	0.750	0.4880	1	208	5.2	370 FPM	88	13.1

CONDENSER DETAILS

FAN UNIT NO	TAG	FAN UNIT MODEL #	CONDENSER NO	TONNAGE	VOLTAGE	PHASE	FREQUENCY	MCA	RLA	MAX FUSE SIZE	MIN WIRE SIZE	SEER
2	MAU-118	A1-15D-MPU	1	3	208-230	3 PHASE	60 HZ	14.5 AMPS	11.9 AMPS	20 AMPS	14 AWG	14

MUA FAN INFORMATION – JOB#5338935

FAN UNIT NO	TAG	QTY	FAN UNIT MODEL #	BLOWER	HOUSING	MIN CFM	DESIGN CFM	ESP	RPM	MOTOR ENCL	HP	BHP	PHASE	VOLT	FLA	MCA	MOCP	WEIGHT (LBS)	SONES
2	MAU-118	1	A1-15D-MPU	15MF-1-MOD	A1	450	983	0.500	1536	ODP,PREMIUM	1.000	0.5230	3	208	3.1	3.9A	15A	1120	17.4

COILS – JOB#5338935

FAN UNIT NO	TAG	COIL TYPE	DESIGN CFM	COOLING											HEATING								
				ENTERING DB TEMP	ENTERING WB TEMP	LEAVING DB TEMP	LEAVING WB TEMP	ENTERING FLUID TEMP	LEAVING FLUID TEMP	FLUID FLOW RATE	PERCENT GLYCOL	TOTAL CAPACITY	SENSIBLE CAPACITY	LATENT CAPACITY	ENTERING DB TEMP	LEAVING DB TEMP	ENTERING FLUID TEMP	LEAVING FLUID TEMP	FLUID FLOW RATE	PERCENT GLYCOL	STEAM PRESSURE	TOTAL CAPACITY	SENSIBLE CAPACITY
2	MAU-118	DX AND HOT WATER	983	86.0°F	72.0°F	66.9°F	61.1°F	---	---	---	---	36.0 MBH	20.0 MBH	16.0 MBH	0°F	70.32°F	150.0°F	120.0°F	5.07 GAL/MIN	---	---	75 MBH	75 MBH

FAN OPTIONS

FAN UNIT NO	TAG	QTY	DESCRIPTION
1	KX-118	1	GREASE BOX
		1	ECM WIRING PACKAGE - PWM SIGNAL FROM ECPM03 PREWIRE (TELCO MOTOR), CCW ROTATION
		1	2 YEAR PARTS WARRANTY
2	MAU-118	1	SIZE 1 UNTEMPERED COMMERCIAL DOWN DISCHARGE FOR DIRECT DRIVE AHUS
		1	MOTORIZED BACKDRAFT DAMPER FOR SIZE 1 HOUSING - MEETS AMCA CLASS 1A RATING
		1	HOT WATER COIL SECTION A1-2 ROW. TEMPERATURE CONTROLS, MIXING VALVES, THERMOSTATS, AND FREEZE PROTECTION BY OTHERS
		1	INSULATED BLOWER SECTION SIZE 1-2 COMMERCIAL
		1	MIXING BOX SHELL FOR SIZE 1 MOD PACKAGE UNIT CONDENSER SUPPORT
		1	SEPARATE 120V WIRING PACKAGE (REQUIRED AND USED ONLY FOR DCV OR PREWIRE WITH VFD) - THREE PHASE ONLY
		1	3 TON SINGLE CIRCUIT MODULAR PACKAGED AC COOLING OPTION FOR SIZE 1 MUA (450 TO 1200 CFM), 208V/230V, 3 PHASE. COOLING THERMOSTAT OR PROGRAMMABLE STAT REQUIRED FOR PROPER OPERATION
		1	MOD PACKAGE UNIT AC CONTROLS FOR UNTEMPERED FANS
		1	2 YEAR PARTS WARRANTY

FAN ACCESSORIES

FAN UNIT NO	TAG	EXHAUST			SUPPLY			
		GREASE CUP	GRAVITY DAMPER	WALL MOUNT	SIDE DISCHARGE	GRAVITY DAMPER	MOTORIZED DAMPER	WALL MOUNT
1	KX-118	YES						
2	MAU-118						YES	

CURB ASSEMBLIES

NO	ON FAN	TAG	WEIGHT	ITEM	SIZE
1	# 1	KX-118	36 LBS	CURB	23.000"W X 23.000"L X 20.000"H ALONG LENGTH, RIGHT VENTED HINGED.
2	# 2		89 LBS	RAIL	6.000"W X 21.000"L X 20.000"H RIGHT.
	# 2			RAIL	6.000"W X 21.000"L X 20.000"H RIGHT.
	# 2			RAIL	6.000"W X 21.000"L X 20.000"H RIGHT.
2	# 2		89 LBS	CURB	21.000"W X 21.000"L X 20.000"H ALONG LENGTH, RIGHT.

H2M architects + engineers

538 Broad Hollow Road, 4th Floor East
Melville, NY 11747
631.756.8000 • www.h2m.com

CONSULTANTS:

MARK	DATE	DESCRIPTION

STATE OF NEW YORK · JOHN LAHEY · 101303 · LICENSED PROFESSIONAL ENGINEER

"ALTERATION OF THIS DOCUMENT EXCEPT BY A LICENSED PROFESSIONAL IS ILLEGAL"

DESIGNED BY:	DRAWN BY:	CHECKED BY:	REVIEWED BY:
DKR	DKR	MJV	JML
PROJECT No.: VGFD2001	DATE: JULY 2022	SCALE: AS SHOWN	

CLIENT

VAILS GATE FIRE DISTRICT

New Storage Building (Phase I)
New Fire Station (Phase II)

872 Blooming Grove Turnpike
New Windsor, NY 12553

CONTRACT

CONTRACT G
GENERAL CONSTRUCTION

STATUS

FINAL BID DOCUMENT

SHEET TITLE

HVAC KITCHEN SCHEDULES (3 OF 10)

DRAWING No.

M2 612.00

X:\VGFD1\Vale Gate Fire Dept\VGFD2001-(Vale Gate FD)\New Firehouse\02-BIM-CADD\Cmc-docs\hvac\M2 610.00 - Kitchen Schedules.dwg Last Modified: Jul 15, 2022 - 12:33pm Plotted on: Jul 15, 2022 - 1:00pm By:dragone

FAN #1 DUBSHFA - EXHAUST FAN (KX-118)

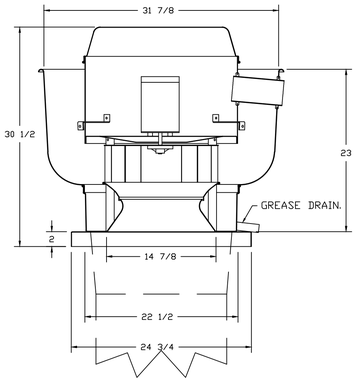

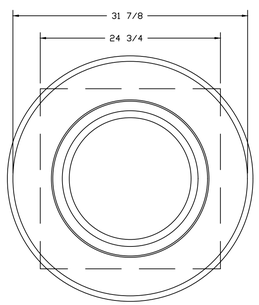

TOP VIEW

FEATURES:

- DIRECT DRIVE CONSTRUCTION (NO BELTS/PULLEYS).
- ROOF MOUNTED FANS.
- RESTAURANT MODEL.
- UL705 AND UL762 AND ULC-S645
- VARIABLE SPEED CONTROL.
- INTERNAL WIRING.
- THERMAL OVERLOAD PROTECTION (SINGLE PHASE).
- HIGH HEAT OPERATION 300°F (149°C).
- GREASE CLASSIFICATION TESTING.
- NEMA 3R SAFETY DISCONNECT SWITCH.

NORMAL TEMPERATURE TEST
EXHAUST FAN MUST OPERATE CONTINUOUSLY WHILE EXHAUSTING AIR AT 300°F (149°C) UNTIL ALL FAN PARTS HAVE REACHED THERMAL EQUILIBRIUM, AND WITHOUT ANY DETERIORATING EFFECTS TO THE FAN WHICH WOULD CAUSE UNSAFE OPERATION.

ABNORMAL FLARE-UP TEST
EXHAUST FAN MUST OPERATE CONTINUOUSLY WHILE EXHAUSTING BURNING GREASE VAPORS AT 600°F (316°C) FOR A PERIOD OF 15 MINUTES WITHOUT THE FAN BECOMING DAMAGED TO ANY EXTENT THAT COULD CAUSE AN UNSAFE CONDITION.

OPTIONS

GREASE BOX.
ECM WIRING PACKAGE - PWM SIGNAL FROM ECPM03 PREWIRE (TELCO MOTOR), CCW ROTATION.
2 YEAR PARTS WARRANTY.

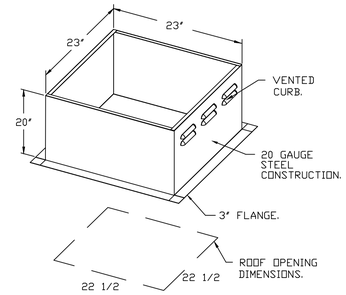

PITCHED CURBS ARE AVAILABLE FOR PITCHED ROOFS.

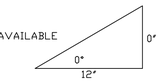

SPECIFY PITCH:
EXAMPLE: 7/12 PITCH = 30° SLOPE.

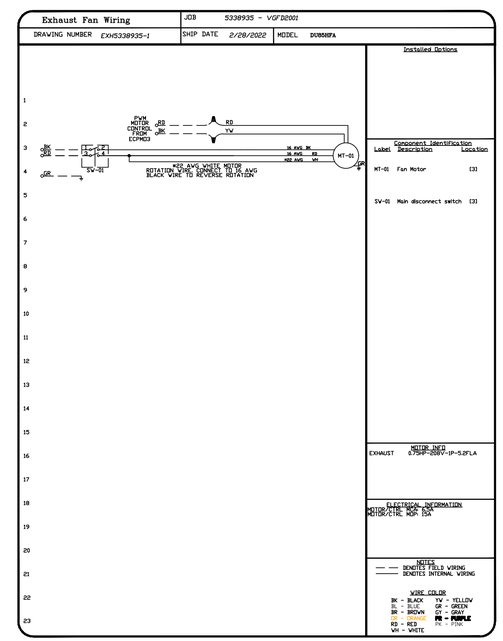

H2M architects + engineers
538 Broad Hollow Road, 4th Floor East
Melville, NY 11747
631.756.8000 • www.h2m.com

CONSULTANTS:

MARK	DATE	DESCRIPTION

STATE OF NEW YORK · JOHN LAHEY · 101303 · LICENSED PROFESSIONAL ENGINEER

"ALTERATION OF THIS DOCUMENT EXCEPT BY A LICENSED PROFESSIONAL IS ILLEGAL"

DESIGNED BY:	DRAWN BY:	CHECKED BY:	REVIEWED BY:
DKR	DKR	MJV	JML
PROJECT No.: VGFD2001	DATE: JULY 2022	SCALE: AS SHOWN	

CLIENT
VAILS GATE FIRE DISTRICT

New Storage Building (Phase I)
New Fire Station (Phase II)

872 Blooming Grove Turnpike
New Windsor, NY 12553

CONTRACT
CONTRACT G
GENERAL CONSTRUCTION

STATUS
FINAL BID DOCUMENT

SHEET TITLE
HVAC KITCHEN SCHEDULES (4 OF 10)

DRAWING No.
M2 613.00

X:\VGFD\Vails Gate Fire Dept\VGFD2001 (Vails Gate FD New Firehouse)\02.BIM-CADD\Con-docs\hvac\M2.610.00 - Kitchen Schedules.dwg Last Modified: Jul 15, 2022 - 12:33pm Plotted on: Jul 15, 2022 - 1:00pm By dragone

FAN #2 A1-15D-MPU - SUPPLY FAN (MAU-118)
1. SUPPLY UNIT WITH 15" MIXED FLOW DIRECT DRIVE FAN IN SIZE #1 HOUSING.
2. INTAKE HOOD WITH EZ FILTERS.
3. DOWN DISCHARGE - AIR FLOW RIGHT -> LEFT.
4. DOWN DISCHARGE CONSTRUCTION FOR SIZE 1 UNTEMPERED DIRECT DRIVE AHUS.
5. MOTORIZED BACK DRAFT DAMPER 16" X 18" FOR SIZE 1 UNTEMPERED UNITS W/EXTENDED SHAFT, STANDARD GALVANIZED CONSTRUCTION, 3/4" REAR FLANGE, LOW LEAKAGE, TF8120S ACTUATOR INCLUDED.
6. HOT WATER COIL MODULE FOR SIZE 1 MODULAR FANS - 3350 CFM @ 70DEG TEMP RISE (253,260 BTU'S) COIL = 5MS1402B-19.5X16.5. OPPOSITE AIRFLOW REQUIRES SPECIAL ORDER COIL WITH EXTENDED LEAD-TIME. TEMPERATURE CONTROLS, MIXING VALVES, THERMOSTATS, AND FREEZE PROTECTION BY OTHERS.
7. INSULATED BLOWER HOUSING SIZES 1-2 COMMERCIAL MODULAR.
8. SUPPORT SHELL FOR SIZE 1 MODULAR PACKAGE UNIT. INCLUDES CONTROL VESTIBULE. INCLUDES CONDENSER SUPPORTS. DOES NOT INCLUDE RETURN AIR OR INLET AIR DAMPER.
9. SEPARATE 120VAC WIRING PACKAGE FOR MAKE-UP AIR UNITS. OPTION MUST BE SELECTED WHEN MOUNTING VFD IN PREWIRE PANEL OR WITH DCV PACKAGE. PROVIDES SEPARATE 120VAC INPUT TO SUPPLY FAN. THIS 120V SIGNAL MUST BE RUN BY ELECTRICIAN FROM DCV TO MUA SWITCH.
10. 3 TON, SINGLE CIRCUIT MODULAR PACKAGED AC COOLING OPTION FOR SIZE 1 MODULAR PACKAGED UNIT. INCLUDES CONDENSER, DX COIL, FILTER/DRYER KIT, THERMAL EXPANSION VALVE, R410A REFRIGERANT, AND REFRIGERANT PIPING. (450 TO 1,225 CFM) WHEN ORDERED WITH OPPOSITE AIRFLOW CONDENSERS ACCESS AND COIL PIPING WILL REMAIN IN STANDARD POSITION. DRAIN AND SLEDS WILL MOVE TO THE OPPOSITE SIDE. ANY OTHER CHANGE WILL REQUIRE C.I. CONDENSERS REQUIRE SEPARATE 208V, 3 PHASE POWER SUPPLY UNLESS ORDERED WITH SINGLE POINT CONNECTION. COIL = 2EY1402.
11. CONTROL PACKAGE FOR MOD PACKAGE UNIT COOLING ONLY UNIT. INCLUDES AIRFLOW PROVING SWITCH, RTULINK-ACHP BOARD AND TERMINAL BLOCKS.
12. HINGED DOUBLE WALL INSULATED DOOR ASSEMBLY (BURNER/BLOWER/MPU SECTION).
13. 2 YEAR PARTS WARRANTY

*NOTE: SUPPLY DUCT MUST BE INSTALLED TO MEET SMACNA STANDARDS. A MINIMUM STRAIGHT DUCT LENGTH MUST BE MAINTAINED DOWNSTREAM OF UNIT DISCHARGE AS OUTLINED IN AMCA PUBLICATION 201. WHEN USING RECTANGULAR DUCTWORK, ELBOWS MUST BE RADIUS THROAT, RADIUS BACK WITH TURNING VANES. FLEXIBLE DUCTWORK AND SQUARE THROAT/SQUARE BACK ELBOWS SHOULD NOT BE USED. ANY TRANSITION AND/OR TURNS IN THE DUCTWORK WILL CAUSE SYSTEM EFFECT. SYSTEM EFFECT WILL DRASTICALLY INCREASE STATIC PRESSURE AND REDUCE AIRFLOW. DO NOT RELY ON UNIT TO SUPPORT DUCT IN ANY WAY. FAILURE TO PROPERLY SIZE DUCTWORK MAY CAUSE SYSTEM EFFECTS AND REDUCE PERFORMANCE OF THE EQUIPMENT.
SUGGESTED STRAIGHT DUCT SIZE IS 14" x 14".

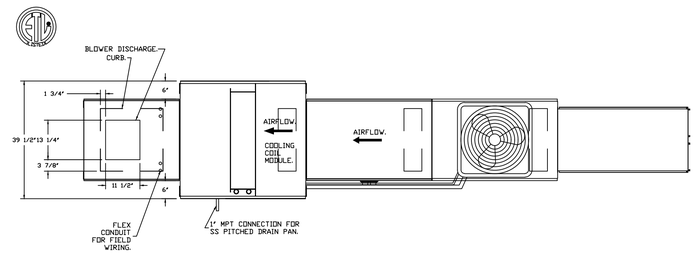

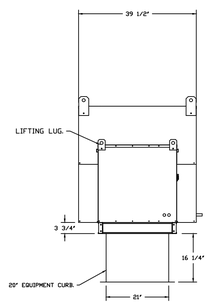

ROOF OPENING 2" SMALLER THAN CURB DIMENSION.

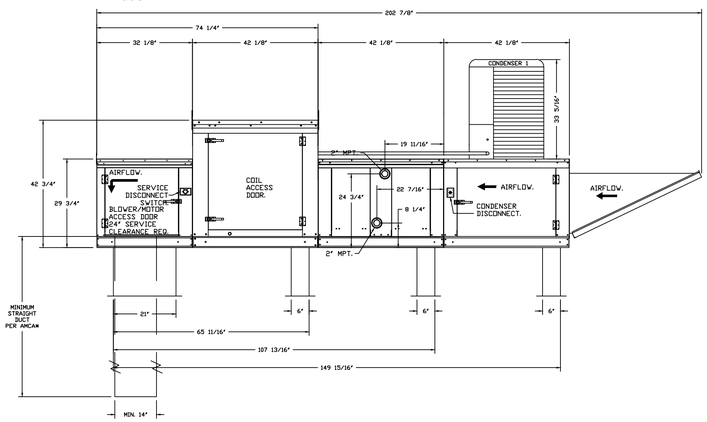

TYPICAL DRAIN TRAP INSTALL

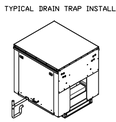

RECOMMENDED COOLING COIL DRAIN TRAP CONFIGURATION.

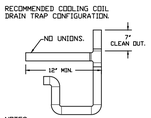

NOTES:
1) 1" DIAMETER PVC PIPE ONLY.
2) USE ONLY LOW PROFILE COUPLINGS.
3) ADD CLEAN OUT AS SHOWN.

GREASE DUCT & CHIMNEY SPECIFICATIONS:
PROVIDE GREASE DUCT EQUAL TO CAPTIVEAIRE SYSTEMS MODEL "DW" ROUND 20 GAUGE 430 STAINLESS STEEL DUCTWORK. MODEL "DW" IS LISTED TO UL-1978 AND IS INSTALLED USING "V" CLAMP LOCKING CONNECTIONS SEALED WITH 3M FIRE BARRIER 2000 PLUS. MODEL "DW" DOES NOT REQUIRE WELDING PROVIDING IT HAS BEEN INSTALLED PER THE MANUFACTURES INSTALLATION GUIDE.
PROVIDE RATED ACCESS DOORS AT EVERY CHANGE IN DIRECTION AND EVERY 12' ON CENTER. PER MANUFACTURES LISTING MODEL "DW" HORIZONTAL RUNS LESS THAN 75 FT. CAN BE SLOPED 1/16" PER 12", HORIZONTAL RUNS MORE THAN 75 FT. CAN BE SLOPED 3/16" PER 12". DUCT SHOULD BE SLOPED AS MUCH AS POSSIBLE TO REDUCE THE CHANCE OF GREASE ACCUMULATION IN HORIZONTAL RUNS.

IF THE DUCT OR CHIMNEY IS WITHIN 18 INCHES OF COMBUSTIBLE MATERIAL, PROVIDE UL-2221 OR UL-103 HT LISTED DOUBLE WALL GREASE DUCT OR DOUBLE WALL CHIMNEY EQUAL TO CAPTIVEAIRE SYSTEMS MODEL "DW- 2R, 2R TYPE HT, 3R, OR 3Z" ROUND 20 GAUGE 430 STAINLESS INNER DUCT INSULATED WITH A 24 GAUGE 430 STAINLESS OUTER SHELL.

CUSTOMER APPROVAL TO MANUFACTURE:

APPROVED AS NOTED ☐
APPROVED WITH NO EXCEPTION TAKEN ☐
REVISE AND RESUBMIT ☐
SIGNATURE _____
YOUR TITLE _____ DATE _____

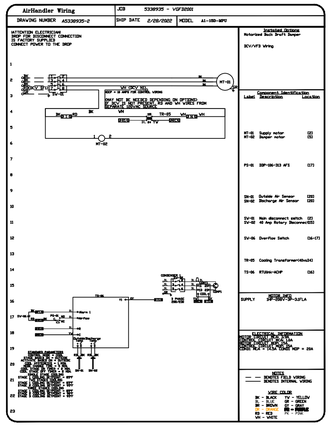

MARK	DATE	DESCRIPTION

"ALTERATION OF THIS DOCUMENT EXCEPT BY A LICENSED PROFESSIONAL IS ILLEGAL"

DESIGNED BY:	DRAWN BY:	CHECKED BY:	REVIEWED BY:
DKR	DKR	MJV	JML

PROJECT No.:	DATE:	SCALE:
VGFD2001	JULY 2022	AS SHOWN

CLIENT
VAILS GATE FIRE DISTRICT

New Storage Building (Phase I)
New Fire Station (Phase II)

872 Blooming Grove Turnpike
New Windsor, NY 12553

CONTRACT
CONTRACT G
GENERAL CONSTRUCTION

STATUS
FINAL BID DOCUMENT

SHEET TITLE
HVAC KITCHEN SCHEDULES (5 OF 10)

DRAWING No.
M2 614.00

H2M architects + engineers
538 Broad Hollow Road, 4th Floor East
Melville, NY 11747
631.756.8000 • www.h2m.com

CONSULTANTS:

X:\(GFD)\Vails Gate Fire Dept\(VGFD2001)\Vails Gate FD New Firehouse\M2-BIM-CADD\Cnx-docs\hvac\M2 614.00 - Kitchen Schedules.dwg Last Modified: Jul 15, 2022 - 12:33pm Plotted on: Jul 15, 2022 - 1:00pm By dragone

ELECTRICAL PACKAGE - JOB#5338935

NO	TAG	PACKAGE #	LOCATION	SWITCHES LOCATION	SWITCHES QUANTITY	OPTION	FANS CONTROLLED FAN TAG	TYPE	Φ	HP	VOLT	FLA
1		DCV-1111	UTILITY CABINET LEFT	03 - UTILITY CABINET LEFT HOOD # 1	1 LIGHT 1 FAN	SMART CONTROLS DCV	KX-1	EXHAUST	1	0.750	208	5.2
								SUPPLY	3	0.250	208	1.2

JOB NO 5338935 | MODEL NUMBER DCV-1111 | JOB NAME VGFD2001 | DRAWN BY | DATE 2/28/2022 | SCHEMATIC TYPE INSTALL | DWG NO ECP #1-1

DESCRIPTION OF OPERATION:
Demand Control Ventilation, w/ control for 1 Exhaust Fan, 1 Supply Fan, Exhaust on in Fire, Lights out in Fire, Fans modulate based on duct temperature. INVERTER DUTY 3 PHASE MOTOR REQUIRED FOR USE WITH VFD. Room temperature sensor shipped loose for field installation.Verify distance between VFD and Motor; additional cost could apply if distance exceeds 50 feet.

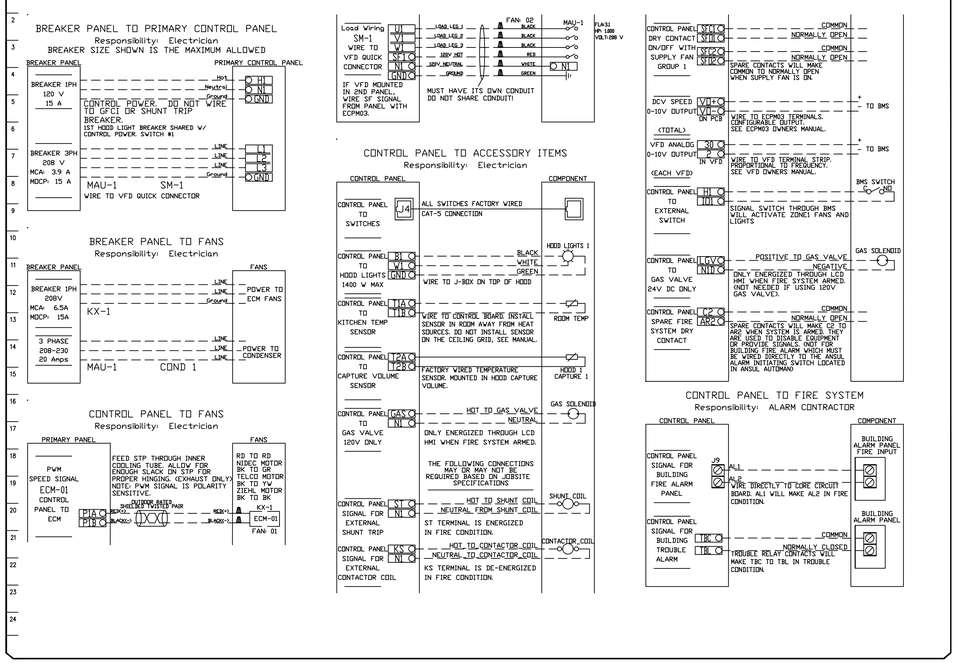

JOB NO 5338935 | MODEL NUMBER DCV-1111 | JOB NAME VGFD2001 | DRAWN BY | DATE 2/28/2022 | SCHEMATIC TYPE INSTALL | DWG NO ECP #1-2

DESCRIPTION OF OPERATION:
Demand Control Ventilation, w/ control for 1 Exhaust Fan, 1 Supply Fan, Exhaust on in Fire, Lights out in Fire, Fans modulate based on duct temperature. INVERTER DUTY 3 PHASE MOTOR REQUIRED FOR USE WITH VFD. Room temperature sensor shipped loose for field installation.Verify distance between VFD and Motor; additional cost could apply if distance exceeds 50 feet.

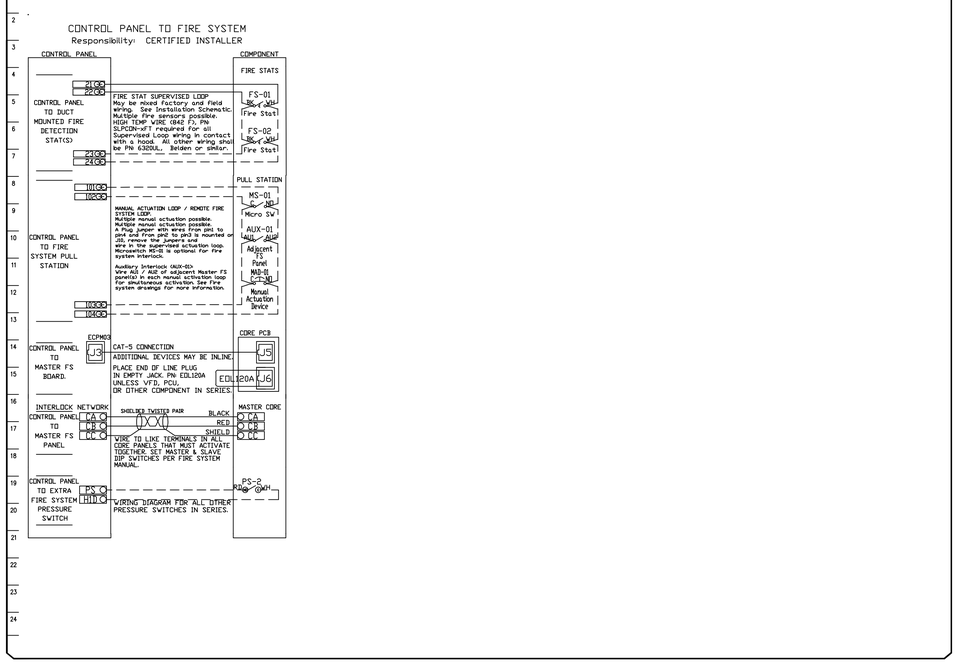

******ATTENTION ELECTRICIAN******
LOAD SIDE WIRING FOR EACH FAN MUST BE RUN IN SEPERATE CONDUIT FROM EMS SYSTEM TO EACH FAN ON ROOF.

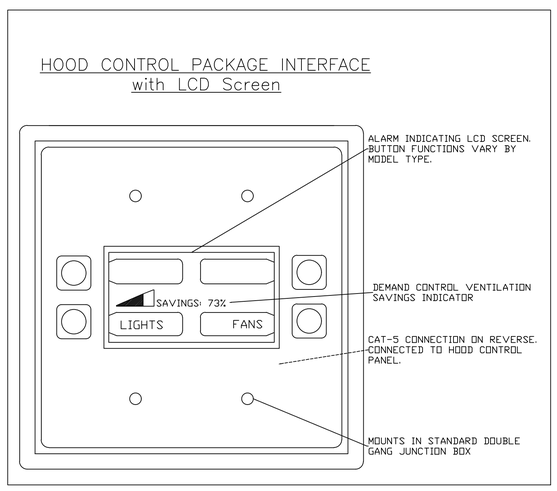

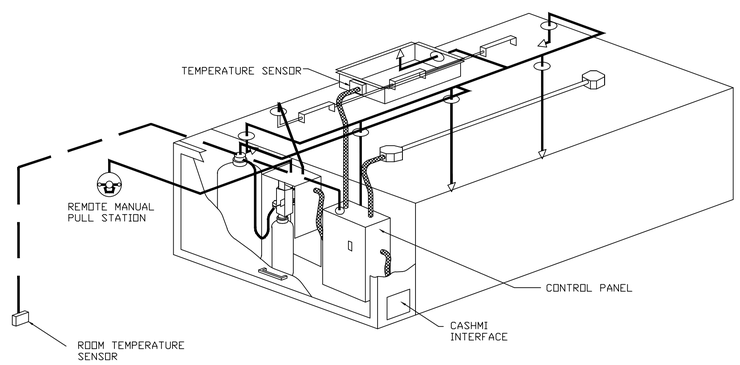

TYPICAL CONTROL CENTER INSTALLATION

H2M architects + engineers
538 Broad Hollow Road, 4th Floor East
Melville, NY 11747
631.756.8000 • www.h2m.com

CONSULTANTS:

MARK	DATE	DESCRIPTION

STATE OF NEW YORK · JOHN LAMY · 101303 · LICENSED PROFESSIONAL ENGINEER

"ALTERATION OF THIS DOCUMENT EXCEPT BY A LICENSED PROFESSIONAL IS ILLEGAL"

DESIGNED BY:	DRAWN BY:	CHECKED BY:	REVIEWED BY:
DKR	DKR	MJV	JML

PROJECT No.:	DATE:	SCALE:
VGFD2001	JULY 2022	AS SHOWN

CLIENT
VAILS GATE FIRE DISTRICT

New Storage Building (Phase I)
New Fire Station (Phase II)

872 Blooming Grove Turnpike
New Windsor, NY 12553

CONTRACT
CONTRACT G
GENERAL CONSTRUCTION

STATUS
FINAL BID DOCUMENT

SHEET TITLE
HVAC KITCHEN SCHEDULES (6 OF 10)

DRAWING No.
M2 615.00

X:\VGFD\Vails Gate Fire Dept\VGFD2001-(Vails Gate FD-New Firehouse)\02-BIM-CADD\Civil-docs\Hood\M2 615.00 - Kitchen Schedules.dwg Last Modified: Jul 15, 2022 - 12:33pm Plotted on: Jul 15, 2022 - 1:00pm By dragone

JOB NO	MODEL NUMBER	DRAWN BY	SCHEMATIC TYPE	DESCRIPTION OF OPERATION:
5338935	DCV-1111		INSTALL	Fire System #1 TANK FS - 4.0. Tank-based Fire Protection System equipped with Electronic Detection utilizing CORE board as a Listed Release Mechanism. Installed in Hood Utility Cabinet with integral hood preaire panel.
	JOB NAME VGFD2001	DATE 2/28/2022	DWG NO ECP #1-3	

TANK PROTECTION ELECTRICAL DETAIL

02/10/2021 Rev. 2

FS-1: MASTER

ELECTRICIAN
1. WIRE MAIN CONTROL PANEL PER INCLUDED SCHEMATIC
2. WIRE ALL FANS PER INCLUDED SCHEMATIC
3. WIRE SHUNT TRIP BREAKER (OPTIONAL)
4. WIRE UDS APPLIANCE KILL SWITCH, IF EQUIPPED (OPTIONAL)
5. WIRE GAS VALVE

ELECTRICAL CONTRACTOR REQUIREMENT					
ITEM	CONNECTION IN PANEL	CONNECTION IN DEVICE	VOLTAGE	AMPERAGE	COMMENTS
SHUNT TRIP BREAKER (OPTIONAL)	ST & N1	BREAKER COIL (A1 & A2)	120 VAC	< 4 AMPS	ST TO A1 ON SHUNT BREAKER COIL, AND NEUTRAL TO A2 ON SHUNT TRIP BREAKER COIL
CONTROL PANEL POWER	H1 & N1 + GROUND	CIRCUIT BREAKER	120 VAC	15 AMPS	CONTROL PANEL POWER MUST NOT BE RUN THROUGH SHUNT TRIP BREAKER
UDS APPLIANCE KILL SWITCH (OPTIONAL)	KTS & N1	KTS & N1	120 VAC	< 4 AMPS	KILL SWITCH TERMINALS MUST BE IN SERIES WITH OTHER KILL SWITCHES
REMOTE 120VAC ANSUL AUTOMAN (OPTIONAL)	AU1, AU2	SOLENOID	120 VAC	< 6 AMPS	120V TO AU1, AU2 TO ANSUL ELECTRIC AUTOMAN, ANSUL SOLENOID TO NEUTRAL
GAS VALVE	LGV & N1D (IF 24 VDC) GAS & N1 (IF 120 VAC)	RED/RED/GREEN	24 VDC OR 120 VAC	< 10 AMPS	IF 24 VDC - 2 WIRES & GROUND, N1D TO RED, LGV TO RED, AND GREEN TO GROUND IF 120 VAC - 2 WIRES & GROUND GAS TO RED, N1 TO RED, AND GREEN TO GROUND

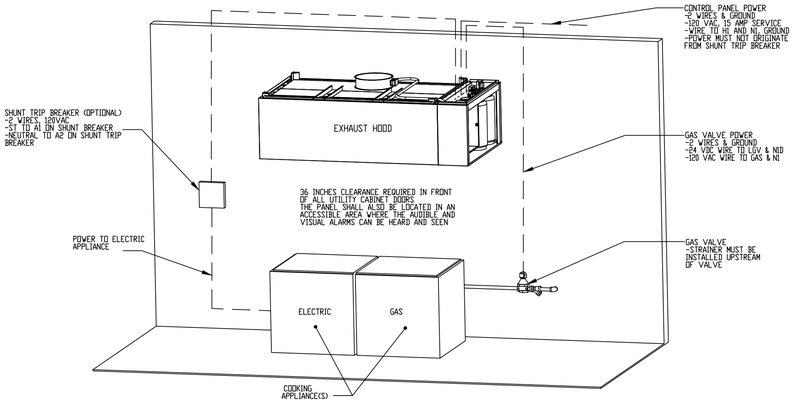

NOTE: SEE INSTALLATION, OPERATION, AND MAINTENANCE MANUAL FOR FURTHER INSTRUCTIONS

JOB NO	MODEL NUMBER	DRAWN BY	SCHEMATIC TYPE	DESCRIPTION OF OPERATION:
5338935	DCV-1111		INSTALL	Fire System #1 TANK FS - 4.0. Tank-based Fire Protection System equipped with Electronic Detection utilizing CORE board as a Listed Release Mechanism. Installed in Hood Utility Cabinet with integral hood preaire panel.
	JOB NAME VGFD2001	DATE 2/28/2022	DWG NO ECP #1-4	

TANK PROTECTION LOW-VOLTAGE DETAIL

02/10/2021 Rev. 2

FS-1: MASTER

ALARM CONTRACTOR:
1. WIRE MANUAL ACTUATION DEVICE(S), REMOTE FIRESTAT(S), CORE INTERLOCK(S), FIRE SENSOR(S) AND FIRE ALARM CONTACTS
2. COMPLETE FINAL HOOKUP OF SYSTEM
3. VERIFY FINAL FIRE SYSTEM TEST

ALARM CONTRACTOR REQUIREMENT					
ITEM	CONNECTION IN PANEL	CONNECTION ON DEVICE	VOLTAGE	AMPERAGE	COMMENTS
MANUAL ACTUATION DEVICE(S)	101 AND 104 102 AND 103	1 & 2	24 VDC	< 1.0 AMPS	WIRE MANUAL ACTUATION DEVICE TERMINAL 1 BETWEEN CORE PANEL TERMINALS 102 AND 103 WIRE MANUAL ACTUATION DEVICE TERMINAL 2 BETWEEN CORE PANEL TERMINALS 101 AND 104 JUMPER 101 TO 104 AND 102 TO 103 IF NO MANUAL ACTUATION DEVICE IS INSTALLED
MANUAL ACTUATION DEVICE COVER	N/A	N/A	N/A	N/A	MANUAL ACTUATION DEVICE COVER MUST BE INSTALLED IF SURFACE MOUNTED, USE COVER EXTENSION STI-6538
REMOTE FIRESTAT SENSOR(S)	21 AND 24 22 AND 23	BLACK AND WHITE	24 VDC	< 1.0 AMPS	WIRE FIRE SENSOR WHITE WIRES BETWEEN HOOD CORE PANEL TERMINALS 22 AND 23 WIRE FIRE SENSOR BLACK WIRE BETWEEN HOOD CORE PANEL TERMINALS 21 AND 24 HIGH TEMP (842°F) #CW04427 (WHT) & #CW04427B (BLK)WIRE OR SIMILAR ONLY IF RAN OVER TOP OF HOOD; OTHERWISE BELDEN #6320UL OR SIMILAR PLENUM RATED WIRE; SEE FIGURE 1
FIRE ALARM CONTACT	AL1, AL2	VARIES	50V MAX (AC/DC)	UP TO 1 AMP	FIRE ALARM RELAY CONTACTS FOR BUILDING FIRE ALARM LOCATED IN THE CORE ELECTRICAL CONTROL PANEL
CORE INTERLOCK(S)	ILA, ILB, ILC	ILA, ILB, ILC	RS-485 COMMUNICATIONS SIGNAL		CORE SYSTEM (1) ILA, TO CORE SYSTEM (2) ILA CORE SYSTEM (1) ILB, TO CORE SYSTEM (2) ILB CORE SYSTEM (1) ILC, TO CORE SYSTEM (2) ILC. USE BELDEN# 88760 OR SIMILAR WIRE
TROUBLE CONTACT	TBC, TBL, TDK	VARIES	MAX 120 VAC	UP TO 6 AMPS	WIRE TO TBL & TBC NORMALLY OPEN CONTACT, CLOSES IN TROUBLE CONDITION
CORE COMMUNICATIONS CABLE	RJ-45 Jack	INTERNET CONNECTION	SIGNAL	<1.0 AMPS	TYPICAL CONNECTION CAT5 CABLE TO LOCAL AREA NETWORK VIA ETHERNET SWITCH OR WIRELESS ROUTER WITH VALID INTERNET CONNECTION

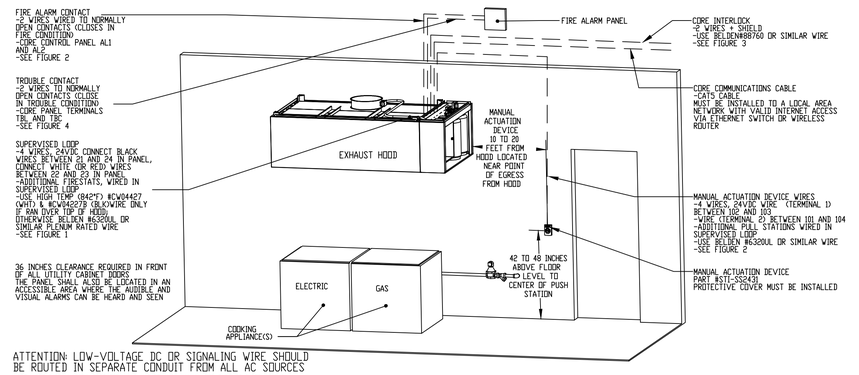

ATTENTION: LOW-VOLTAGE DC OR SIGNALING WIRE SHOULD BE ROUTED IN SEPARATE CONDUIT FROM ALL AC SOURCES

NOTE: SEE INSTALLATION, OPERATION, AND MAINTENANCE MANUAL FOR FURTHER INSTRUCTIONS

JOB NO	MODEL NUMBER	DRAWN BY	SCHEMATIC TYPE	DESCRIPTION OF OPERATION:
5338935	DCV-1111		INSTALL	Fire System #1 TANK FS - 4.0. Tank-based Fire Protection System equipped with Electronic Detection utilizing CORE board as a Listed Release Mechanism. Installed in Hood Utility Cabinet with integral hood preaire panel.
	JOB NAME VGFD2001	DATE 2/28/2022	DWG NO ECP #1-5	

TANK PROTECTION LOW-VOLTAGE FIGURES

02/10/2021 Rev. 17

FS-1: MASTER

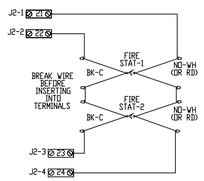

WIRING CONNECTIONS FOR FIRESTAT LOOP FIGURE 1

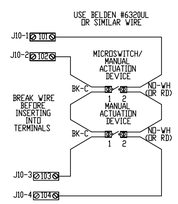

WIRING CONNECTIONS FOR MANUAL ACTUATION LOOP FIGURE 1A

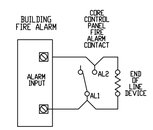

WIRING CONNECTIONS FOR FIRE ALARM CONTACT FIGURE 2

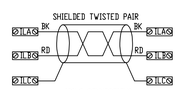

WIRING CONNECTIONS FOR CORE INTERLOCK FIGURE 3

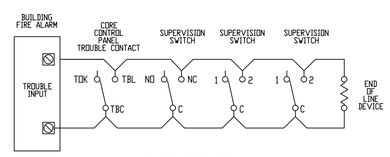

WIRING CONNECTIONS FOR TROUBLE CONTACT FIGURE 4

ATTENTION: LOW-VOLTAGE DC OR SIGNALING WIRE SHOULD BE ROUTED IN SEPARATE CONDUIT FROM ALL AC SOURCES

NOTE: SEE INSTALLATION, OPERATION, AND MAINTENANCE MANUAL FOR FURTHER INSTRUCTIONS

H2M architects + engineers
538 Broad Hollow Road, 4th Floor East
Melville, NY 11747
631.756.8000 • www.h2m.com

CONSULTANTS:

MARK	DATE	DESCRIPTION

STATE OF NEW YORK · JOHN LAMY · 101303 · LICENSED PROFESSIONAL ENGINEER

"ALTERATION OF THIS DOCUMENT EXCEPT BY A LICENSED PROFESSIONAL IS ILLEGAL"

DESIGNED BY:	DRAWN BY:	CHECKED BY:	REVIEWED BY:
DKR	DKR	MJV	JML

PROJECT No.:	DATE:	SCALE:
VGFD2001	JULY 2022	AS SHOWN

CLIENT

VAILS GATE FIRE DISTRICT

New Storage Building (Phase I)
New Fire Station (Phase II)

872 Blooming Grove Turnpike
New Windsor, NY 12553

CONTRACT

CONTRACT G
GENERAL CONSTRUCTION

STATUS

FINAL BID DOCUMENT

SHEET TITLE

HVAC KITCHEN SCHEDULES (7 OF 10)

DRAWING No.

M2 616.00

X:\VGFD1\Vale Gate Fire Dept\VGFD2001-(Vale Gate FD New Firehouse)\02-BIM-CADD\Cnv-docs\hvac\M2 616.00 - Kitchen Schedules.dwg Last Modified: Jul 15, 2022 - 12:33pm Plotted on: Jul 15, 2022 - 1:00pm By dragone

DEMAND CONTROL VENTILATION HOOD CONTROL PANEL SPECIFICATIONS:

- CONTROLS SHALL BE LISTED BY ETL (UL 508A) AND SHALL COMPLY WITH DEMAND VENTILATION SYSTEM TURNDOWN REQUIREMENTS OUTLINED IN IECC 403.2.8 (2015).
- THE CONTROL ENCLOSURE SHALL BE NEMA 1 RATED AND LISTED FOR INSTALLATION INSIDE OF THE EXHAUST HOOD UTILITY CABINET. THE CONTROL ENCLOSURE MAY BE CONSTRUCTED OF STAINLESS STEEL OR PAINTED STEEL.
- TEMPERATURE PROBE(S) LOCATED IN THE EXHAUST DUCT RISER(S) SHALL BE CONSTRUCTED OF STAINLESS STEEL.
- A DIGITAL CONTROLLER SHALL BE PROVIDED TO ACTIVATE THE HOOD EXHAUST FANS DYNAMICALLY BASED ON A FIXED DIFFERENTIAL BETWEEN THE AMBIENT AND DUCT TEMPERATURES SENSORS. THIS FUNCTION SHALL MEET THE REQUIREMENTS OF IMC 507.1.1.
- A DIGITAL CONTROLLER SHALL PROVIDE ADJUSTABLE HYSTERESIS SETTINGS TO PREVENT CYCLING OF THE FANS AFTER THE COOKING APPLIANCES HAVE BEEN TURNED OFF AND/OR THE HEAT IN THE EXHAUST SYSTEM IS REDUCED.
- A DIGITAL CONTROLLER SHALL PROVIDE AN ADJUSTABLE MINIMUM FAN RUN-TIME SETTING TO PREVENT FAN CYCLING.
- VARIABLE FREQUENCY DRIVES (VFDS) SHALL BE PROVIDED FOR FANS AS REQUIRED. THE DIGITAL CONTROLLER SHALL MODULATE THE VFDS BETWEEN A MINIMUM SETPOINT AND A MAXIMUM SETPOINT ON DEMAND. THE DUCT TEMPERATURE SENSOR INPUT(S) TO THE DIGITAL CONTROLLER SHALL BE USED TO CALCULATE THE SPEED REFERENCE SIGNAL.
- THE VFD SPEED RANGE OF OPERATION SHALL BE FROM 0% TO 100% FOR THE SYSTEM, WITH THE ACTUAL MINIMUM SPEED SET AS REQUIRED TO MEET MINIMUM VENTILATION REQUIREMENTS.
- AN INTERNAL ALGORITHM TO THE DIGITAL CONTROLLER SHALL MODULATE SUPPLY FAN VFD SPEED PROPORTIONAL TO ALL EXHAUST FANS THAT ARE LOCATED IN THE SAME FAN GROUP AS THE SUPPLY FAN.
- THE SYSTEM SHALL OPERATE IN PREP MODE DURING LIGHT COOKING LOAD OR COOL DOWN MODE WHEN SUFFICIENT HEAT REMAINS UNDERNEATH THE HOOD SYSTEM AFTER COOKING OPERATIONS HAVE COMPLETED. OPERATION DURING EITHER OF THESE PERIODS WILL DISABLE THE SUPPLY FANS AND PROVIDE AN EXHAUST FAN SPEED THAT IS EQUAL TO THE MINIMUM VENTILATION REQUIREMENT.
- A DIGITAL CONTROLLER SHALL DISABLE THE SUPPLY FAN(S), ACTIVATE THE EXHAUST FAN(S), ACTIVATE THE APPLIANCE SHUNT TRIP, AND DISABLE AN ELECTRIC GAS VALVE AUTOMATICALLY WHEN FIRE CONDITION IS DETECTED ON A COVERED HOOD.
- A DIGITAL CONTROLLER SHALL ALLOW FOR EXTERNAL BMS FAN CONTROL VIA DRY CONTACT (EXTERNAL CONTROL SHALL NOT OVERRIDE FAN OPERATION LOGIC AS REQUIRED BY CODE).
- AN LCD INTERFACE SHALL BE PROVIDED WITH THE FOLLOWING FEATURES:
  - A. ON/OFF PUSH BUTTON FAN & LIGHT SWITCH ACTIVATION.
  - B. INTEGRATED GAS VALVE RESET FOR ELECTRONIC GAS VALVES (NO RESET RELAY REQUIRED).
  - C. VFD FAULT DISPLAY WITH AUDIBLE & VISUAL ALARM NOTIFICATION.
  - D. DUCT TEMPERATURE SENSOR FAILURE DETECTION WITH AUDIBLE & VISUAL ALARM NOTIFICATION.
  - E. MIS-WIRED DUCT TEMPERATURE SENSOR DETECTION WITH AUDIBLE & VISUAL ALARM NOTIFICATION.
  - F. A SINGLE LOW VOLTAGE CAT-5 RJ45 WIRING CONNECTION.
  - G. AN ENERGY SAVINGS INDICATOR THAT UTILIZES MEASURED KWH FROM THE VFDS.

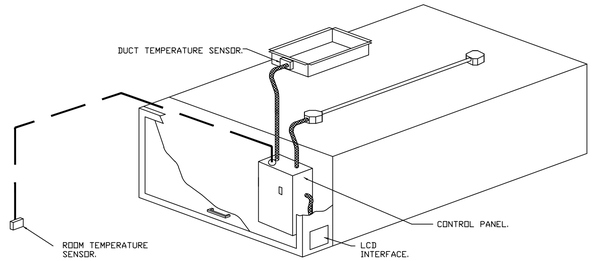

TYPICAL HOOD CONTROL PANEL INSTALLATION

SEQUENCE OF OPERATIONS:

THE HOOD CONTROL PANEL IS CAPABLE OF OPERATING IN ONE OR MORE OF THE FOLLOWING STATES AT ANY GIVEN TIME:

- AUTOMATIC: THE SYSTEM OPERATES BASED ON THE DIFFERENTIAL BETWEEN ROOM TEMPERATURE AND THE TEMPERATURE AT THE HOOD CAVITY OR EXHAUST DUCT COLLAR. FANS ACTIVATE AT A CONFIGURABLE TEMPERATURE DIFFERENTIAL THRESHOLD. DEPENDING ON THE JOB CONFIGURATION EACH FAN ZONE CAN BE CONFIGURED AS STATIC OR DYNAMIC. THESE TERMS REFER TO WHETHER A VARIABLE MOTOR (SUCH AS EC MOTORS OR VFD DRIVEN MOTORS) MODULATE WITH TEMPERATURE. IF THE PANEL IS EQUIPPED WITH VARIABLE SPEED FANS AND THE ZONE IS DEFINED AS "DYNAMIC", THESE WILL MODULATE WITHIN A USER-DEFINED RANGE BASED ON THE TEMPERATURE DIFFERENTIAL. PANELS EQUIPPED WITH VARIABLE SPEED FANS AND A FAN ZONE DEFINED AS "STATIC", FANS WILL RUN AT A SET SPEED CALCULATED FOR THE DRIVE. DEMAND CONTROL VENTILATION SYSTEMS ARE CAPABLE OF MODULATING EXHAUST AND MAKE UP AIR FAN SPEEDS PER THE REQUIREMENTS OUTLINED IN IECC 403.2.8.
- MANUAL: THE SYSTEM OPERATES BASED ON HUMAN INPUT FROM AN HMI.
- SCHEDULE: A WEEKLY SCHEDULE CAN BE SET TO RUN FANS FOR A SPECIFIED PERIOD THROUGHOUT THE DAY. THERE ARE THREE OCCUPIED TIMES PER DAY TO ALLOW FOR THE USER TO SET UP A TIME THAT IS SUITABLE TO THEIR NEEDS. ANY TIME THAT IS WITHIN THE DEFINED OCCUPIED TIME, THE SYSTEM WILL RUN AT MODULATION MODE AND FOLLOW THE FAN PROCEDURE ALGORITHM BASED ON TEMPERATURE DURING THIS TIME. DURING UNOCCUPIED TIME, THE SYSTEM WILL HAVE AN EXTRA OFFSET TO PREVENT UNINTENDED ACTIVATION OF THE SYSTEM DURING A TIME WHERE THE SYSTEM IS NOT BEING OCCUPIED.
- OTHER: THE SYSTEM OPERATES BASED ON THE INPUT FROM AN EXTERNAL SOURCE (DDC, BMS OR HARD-WIRED INTERLOCK).
- FIRE: UPON ACTIVATION OF THE HOOD FIRE SUPPRESSION SYSTEM, THE EXHAUST FAN WILL COME ON OR CONTINUE TO TO RUN, THE HOOD MAKEUP AIR WILL SHUTDOWN, AND A SIGNAL WILL BE SENT FOR ACTIVATING THE SHUNT TRIP BREAKER PROVIDED BY THE ELECTRICIAN. FUEL GAS WILL SHUT OFF VIA A MECHANICAL/ELECTRICAL GAS VALVE ACTUATED BY THE HOOD FIRE SUPPRESSION SYSTEM.

SYSTEM DESIGN VERIFICATION (SDV)

IF ORDERED, CAS SERVICE WILL PERFORM A SYSTEM DESIGN VERIFICATION (SDV) ONCE ALL EQUIPMENT HAS HAD A COMPLETE START UP PER THE OPERATION AND INSTALLATION MANUAL. TYPICALLY, THE SDV WILL BE PERFORMED AFTER ALL INSPECTIONS ARE COMPLETE.

ANY FIELD RELATED DISCREPANCIES THAT ARE DISCOVERED DURING THE SDV WILL BE BROUGHT TO THE ATTENTION OF THE GENERAL CONTRACTOR AND CORRESPONDING TRADES ON SITE. THESE ISSUES WILL BE DOCUMENTED AND FORWARDED TO THE APPROPRIATE SALES OFFICE. IF CAS SERVICE HAS TO RESOLVE A DISCREPANCY THAT IS A FIELD ISSUE, THE GENERAL CONTRACTOR WILL BE NOTIFIED AND BILLED FOR THE WORK. SHOULD A RETURN TRIP BE REQUIRED DUE TO ANY FIELD RELATED DISCREPANCY THAT CANNOT BE RESOLVED DURING THE SDV, THERE WILL BE ADDITIONAL TRIP CHARGES.

DURING THE SDV, CAS SERVICE WILL ADDRESS ANY DISCREPANCY THAT IS THE FAULT OF THE MANUFACTURER. SHOULD A RETURN TRIP BE REQUIRED, THE GENERAL CONTRACTOR AND APPROPRIATE SALES OFFICE WILL BE NOTIFIED. THERE WILL BE NO ADDITIONAL CHARGES FOR MANUFACTURER DISCREPANCIES.

H2M architects + engineers

538 Broad Hollow Road, 4th Floor East
Melville, NY 11747
631.756.8000 • www.h2m.com

CONSULTANTS:

MARK	DATE	DESCRIPTION

STATE OF NEW YORK · JOHN LAMY · 101303 · LICENSED PROFESSIONAL ENGINEER

"ALTERATION OF THIS DOCUMENT EXCEPT BY A LICENSED PROFESSIONAL IS ILLEGAL"

DESIGNED BY:	DRAWN BY:	CHECKED BY:	REVIEWED BY:
DKR	DKR	MJV	JML

PROJECT No.:	DATE:	SCALE:
VGFD2001	JULY 2022	AS SHOWN

CLIENT

VAILS GATE FIRE DISTRICT

New Storage Building (Phase I)
New Fire Station (Phase II)

872 Blooming Grove Turnpike
New Windsor, NY 12553

CONTRACT

CONTRACT G
GENERAL CONSTRUCTION

STATUS

FINAL BID DOCUMENT

SHEET TITLE

HVAC KITCHEN SCHEDULES (8 OF 10)

DRAWING No.

M2 617.00

X:\VGFD\Vails Gate Fire Dept\VGFD2001\Vails Gate FD-New Firehouse\02-BIM-CADD\Civil-dwgs\Hvac\M2 617.00 - Kitchen Schedules.dwg Last Modified: Jul 15, 2022 - 12:33pm Plotted on: Jul 15, 2022 - 1:00pm By dragone

DUCTWORK #1 PARTS – JOB#5338935 DOUBLE WALL

TAG	PART #	CFM	GPM	ZONE	COVEREDBY	SP	WEIGHT	VELOCITY	QTY	DESCRIPTION
P1	DW1090DWASY-2R-S	1170				-0.21	20.35	2145.15	1	DOUBLE WALL DUCT - 10" INNER 90 DUCT - 2 LAYERS REDUCED CLEARANCE - 14" STAINLESS STEEL OUTER SHELL.
P2	DW1001DWOFFSETASY-2R-S	1170				-0.008	10.25	2145.15	1	DOUBLE WALL DUCT - 10" INNER DUCT RISER & 1 DEGREE OFFSET - 2 LAYERS REDUCED CLEARANCE - 14" STAINLESS STEEL OUTER SHELL.
P3	DW1047DWLT-2R-S	1170				-0.045	47.26	2145.15	1	DOUBLE WALL DUCT - 10" INNER DUCT, 47" LONG - 2 LAYERS REDUCED CLEARANCE - 14" STAINLESS STEEL OUTER SHELL.
P4	DW1418SADKIT						5.82		1	DUCT - HORIZONTAL SADDLE SUPPORT KIT, USED WITH 14" OD - INCLUDES UNI-STRUT CUT TO LENGTH,, DW1418SAD, & HARDWARE BAG 4.
P5	DW1047DWAJD-2R-S	1170				-0.034	72.54	2145.15	1	DOUBLE WALL ADJUSTABLE DUCT - 10" INNER DUCT - 2 LAYERS REDUCED CLEARANCE - 14" STAINLESS STEEL OUTER SHELL. MIN LENGTH = 11" / MAX LENGTH = 49.5" / ADJUSTMENT = 31.5" / ADJUSTABLE SECTION MAY NEED TO BE CUT. INCLUDES SINGLE AND DOUBLE WALL "V" CLAMPS.
P6	DW1001DWOFFSETASY-2R-S	1170				-0.008	10.25	2145.15	1	DOUBLE WALL DUCT - 10" INNER DUCT RISER & 1 DEGREE OFFSET - 2 LAYERS REDUCED CLEARANCE - 14" STAINLESS STEEL OUTER SHELL.
P7 ASSEMBLED W/P8	DW10DWTEASY-2R-S	1170		1		-0.12	27.71	2145.15	1	DOUBLE WALL DUCT - 10" INNER TEE DUCT - 2 LAYERS REDUCED CLEARANCE - 14" STAINLESS STEEL OUTER SHELL.
P8 ASSEMBLED W/P7 O=S	DW10DWACCDOORCOV-2R-S						15.14		1	DOUBLE WALL DUCT - 10" INNER ACCESS DOOR & 14" ACCESS DOOR COVER WITH CLAMPS - 2 LAYERS REDUCED CLEARANCE - 14" STAINLESS STEEL OUTER SHELL.
P9	DW1047DWLT-2R-S	1170				-0.045	47.26	2145.15	1	DOUBLE WALL DUCT - 10" INNER DUCT, 47" LONG - 2 LAYERS REDUCED CLEARANCE - 14" STAINLESS STEEL OUTER SHELL.
P10	DW1047DWLT-2R-S	1170				-0.045	47.26	2145.15	1	DOUBLE WALL DUCT - 10" INNER DUCT, 47" LONG - 2 LAYERS REDUCED CLEARANCE - 14" STAINLESS STEEL OUTER SHELL.
P11 ASSEMBLED W/P12	DW10DWTEASY-2R-S	1170		1		-0.021	27.71	2145.15	1	DOUBLE WALL DUCT - 10" INNER TEE DUCT - 2 LAYERS REDUCED CLEARANCE - 14" STAINLESS STEEL OUTER SHELL.
P12 ASSEMBLED W/P11 O=T	DW10DWACCDOORCOV-2R-S						15.14		1	DOUBLE WALL DUCT - 10" INNER ACCESS DOOR & 14" ACCESS DOOR COVER WITH CLAMPS - 2 LAYERS REDUCED CLEARANCE - 14" STAINLESS STEEL OUTER SHELL.
P13	DW1047DWLT-2R-S	1170				-0.045	47.26	2145.15	1	DOUBLE WALL DUCT - 10" INNER DUCT, 47" LONG - 2 LAYERS REDUCED CLEARANCE - 14" STAINLESS STEEL OUTER SHELL.
P14 ASSEMBLED W/P15	DW1035DWLTTP-2R-S	1170				-0.034	36.51	2145.15	1	DOUBLE WALL DUCT - 10" INNER DUCT, 35" LONG - 2 LAYERS REDUCED CLEARANCE - 14" STAINLESS STEEL OUTER SHELL - USED WITH TRANSITION PLATE.
P15 ASSEMBLED W/P14	DW2310TPDB	1170					14.66	2145.15	1	DUCT TO CURB TRANSITION DOWN TURN, 23" CURB TO 10" DUCT, 16 GA ALUMINIZED. NOT FOR USE WITH EXHAUST FANS.
SYSTEM AT P15						-1.551	0.00			
P16	DW1418SADKIT						5.82		1	DUCT - HORIZONTAL SADDLE SUPPORT KIT, USED WITH 14" OD - INCLUDES UNI-STRUT CUT TO LENGTH,, DW1418SAD, & HARDWARE BAG 4.
	3M-2000PLUS						0.80		3	DUCT - 3M FIRE BARRIER 2000 PLUS SILICONE - USED AS SEALANT TO SEAL DUCT JOINTS.
	DW10DWCLASY-2R-S						5.67		8	DUCT - 10" DUCT - 14" DOUBLE "V" CLAMP - 2R INSULATION & SINGLE "V" CLAMP INCLUDED - REDUCED CLEARANCE.
TOTAL WEIGHT							498.70			

DOUBLE WALL FACTORY BUILT DUCTWORK

- ALL DUCTWORK IS REQUIRED TO BE INSTALLED WITH THE MAXIMUM SUPPORT SPACING LISTED BELOW.
- FOR A COMPLETE LIST OF APPROVED SUPPORT METHODS, SEE THE ENTIRE INSTALLATION AND OPERATION MANUAL
- DUCTWORK SHALL SLOPE NOT LESS THAN 1/16" PER LINEAR FOOT TOWARDS THE HOOD OR AN APPROVED GREASE COLLECTION RESERVOIR.
- WHERE HORIZONTAL DUCTS EXCEED 75 FEET IN LENGTH, THE SLOPE SHALL NOT BE LESS THAN 3/16" PER LINEAR FOOT.

HORIZONTAL	
DUCT DIAMETER	SUPPORT SPACING (FT)
5"	7'
6"	7'
7"	7'
8"	7'
10"	7'
12"	7'
14"	7'
16"	7'
18"	5'
20"	5'
22"	5'
24"	5'
26"	5'
28"	5'
30"	5'
32"	5'
34"	5'
36"	5'

VERTICAL			
TYPE	WALL SUPPORT (FT)	CURB SUPPORT (FT)	FLOOR SUPPORT (FT)
2R & 2R HT (5"-16")	20'	24'	24'
2R (18")	18'	24'	24'
3R & 3Z (5"-24")	10'	24'	24'
3Z (26" -36")	10'	20'	20'

DO NOT LEAK TEST USING SMOKE BOMBS CONTAINING CHLORINES/CHLORIDES. CONSULT WITH CAPTIVEAIRE FOR PROPER LEAK TESTING METHODS.

DUCTWORK #1 FRONT VIEW

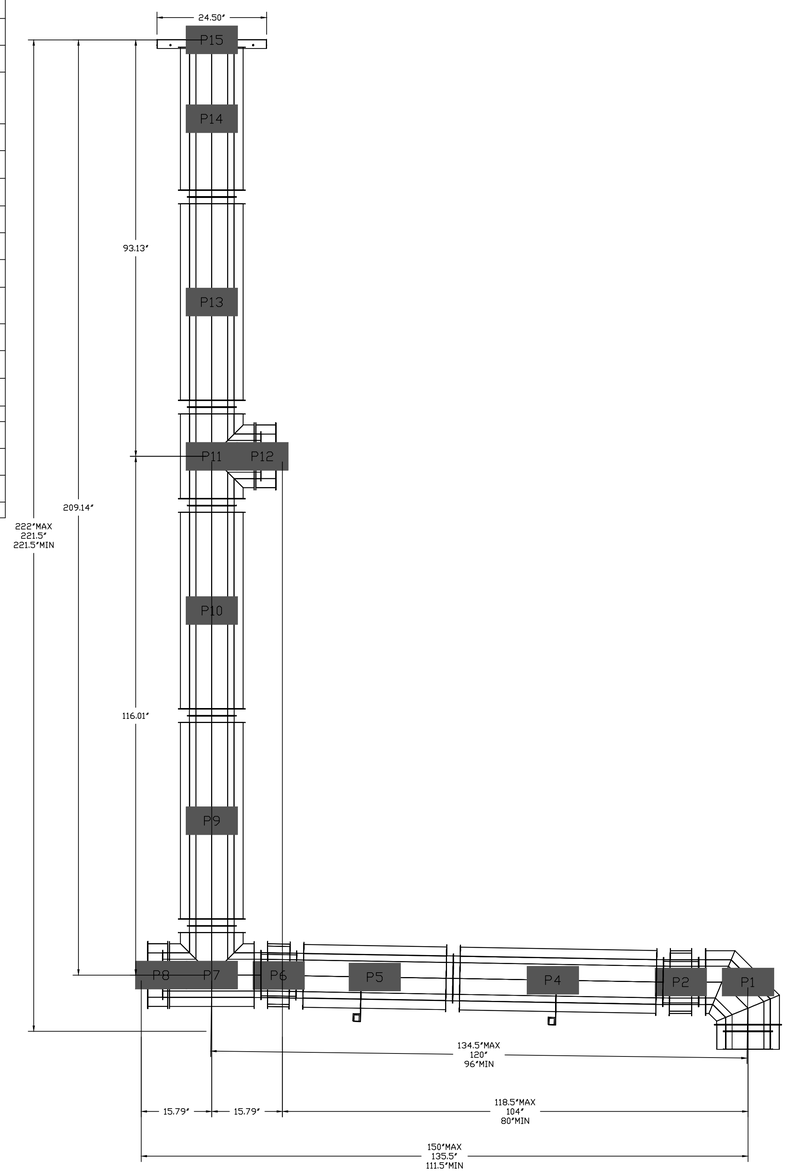

H2M architects + engineers

538 Broad Hollow Road, 4th Floor East
Melville, NY 11747
631.756.8000 • www.h2m.com

CONSULTANTS:

MARK	DATE	DESCRIPTION

STATE OF NEW YORK · JOHN LAHEY · 101303 · LICENSED PROFESSIONAL ENGINEER

"ALTERATION OF THIS DOCUMENT EXCEPT BY A LICENSED PROFESSIONAL IS ILLEGAL"

DESIGNED BY:	DRAWN BY:	CHECKED BY:	REVIEWED BY:
DKR	DKR	MJV	JML

PROJECT No.:	DATE:	SCALE:
VGFD2001	JULY 2022	AS SHOWN

CLIENT

VAILS GATE FIRE DISTRICT

New Storage Building (Phase I)
New Fire Station (Phase II)

872 Blooming Grove Turnpike
New Windsor, NY 12553

CONTRACT

CONTRACT G
GENERAL CONSTRUCTION

STATUS

FINAL BID DOCUMENT

SHEET TITLE

HVAC KITCHEN SCHEDULES (9 OF 10)

DRAWING No.

M2 618.00

X:\VGFD \Vails Gate Fire Dept\VGFD2001 (Vails Gate FD-New Firehouse)\02-BIM-CADD\Con-docs\hvac\M2 610.00 - Kitchen Schedules.dwg Last Modified: Jul 15, 2022 - 12:33pm Plotted on: Jul 15, 2022 - 1:00pm By dragone

DUCTWORK #1 SIDE VIEW

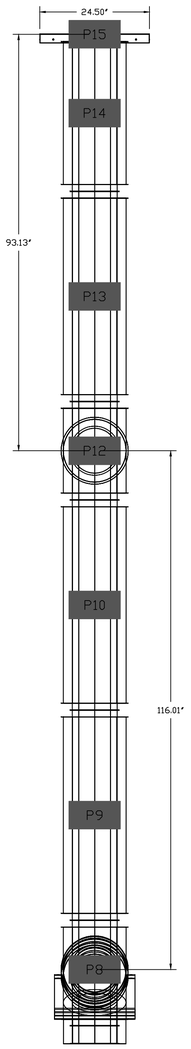

DUCTWORK #1 TOP VIEW

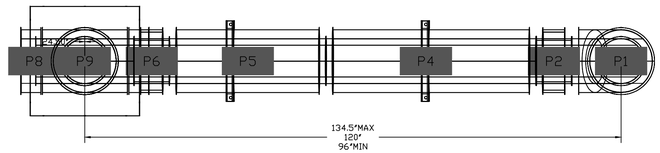

DUCTWORK #1 SE VIEW

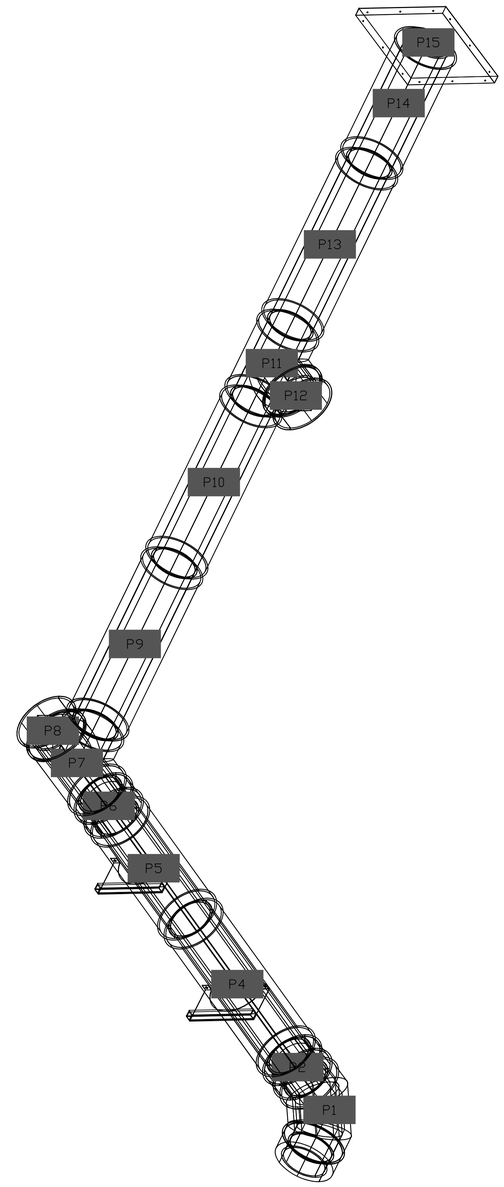

H2M architects + engineers

538 Broad Hollow Road, 4th Floor East
Melville, NY 11747
631.756.8000 • www.h2m.com

CONSULTANTS:

MARK	DATE	DESCRIPTION

"ALTERATION OF THIS DOCUMENT EXCEPT BY A LICENSED PROFESSIONAL IS ILLEGAL"

DESIGNED BY:	DRAWN BY:	CHECKED BY:	REVIEWED BY:
DKR	DKR	MJV	JML

PROJECT No.:	DATE:	SCALE:
VGFD2001	JULY 2022	AS SHOWN

CLIENT

VAILS GATE FIRE DISTRICT

New Storage Building (Phase I)
New Fire Station (Phase II)

872 Blooming Grove Turnpike
New Windsor, NY 12553

CONTRACT

CONTRACT G
GENERAL CONSTRUCTION

STATUS

FINAL BID DOCUMENT

SHEET TITLE

HVAC KITCHEN SCHEDULES (10 OF 10)

DRAWING No.

M2 619.00

X:\VGFD (Vails Gate Fire Dept)\VGFD2001-(Vails Gate FD-New Firehouse)\02-BIM-CADD\Con-docs\hvac\M2 610.00 - Kitchen Schedules.dwg Last Modified: Jul 15, 2022 - 12:33pm Plotted on: Jul 15, 2022 - 1:00pm By dragone

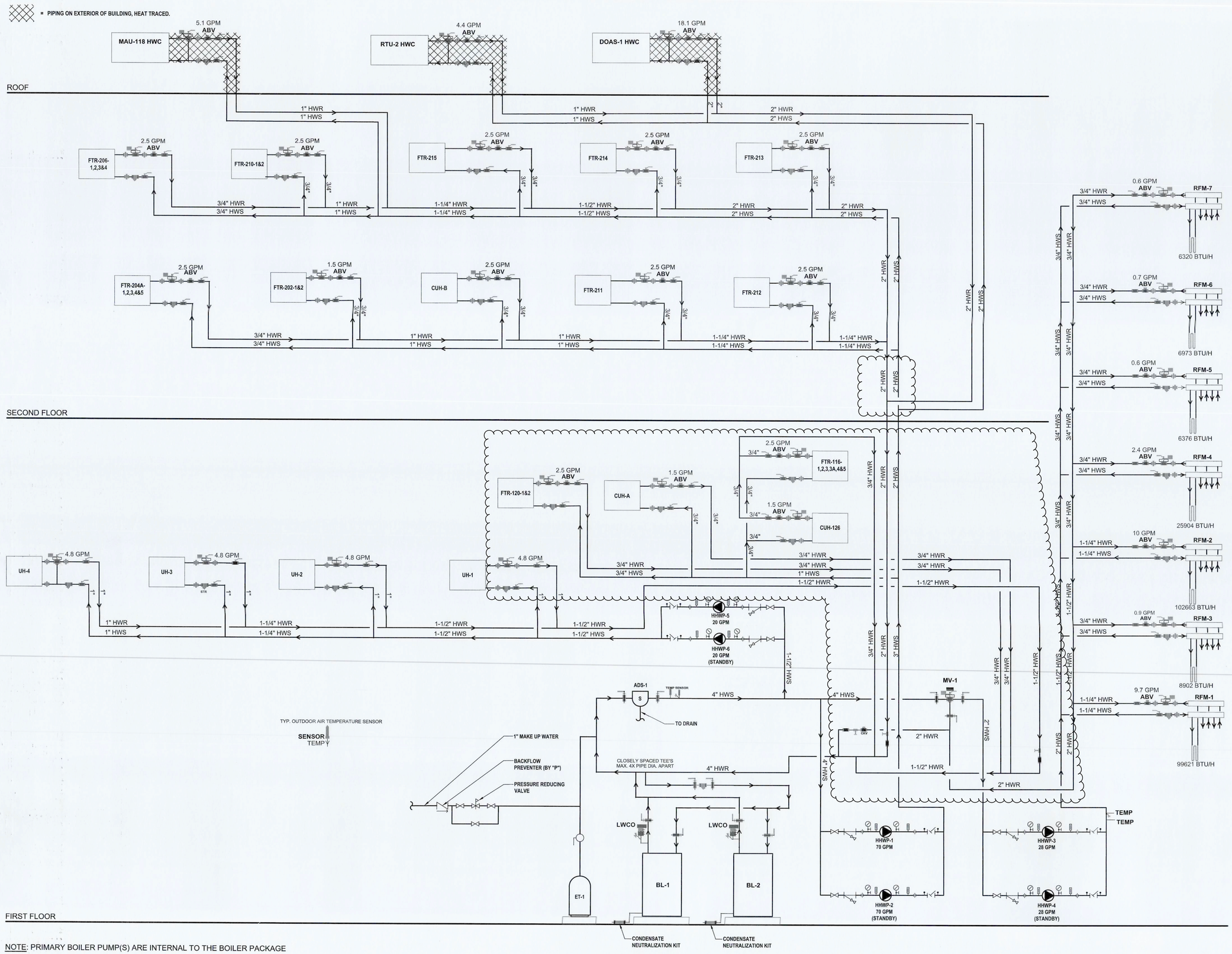

NOTE: PRIMARY BOILER PUMP(S) ARE INTERNAL TO THE BOILER PACKAGE

H2M architects + engineers

538 Broad Hollow Road, 4th Floor East
Melville, NY 11747
631.756.8000 • www.h2m.com

CONSULTANTS:

MARK	DATE	DESCRIPTION
2	12/22/2022	REVS. PER TOWN COMMENTS

STATE OF NEW YORK · JOHN LAHEY · LICENSED PROFESSIONAL ENGINEER

"ALTERATION OF THIS DOCUMENT EXCEPT BY A LICENSED PROFESSIONAL IS ILLEGAL"

DESIGNED BY:	DRAWN BY:	CHECKED BY:	REVIEWED BY:
DKR	DKR	MJV	JML

PROJECT No.:	DATE:	SCALE:
VGFD2001	JULY 2022	AS SHOWN

CLIENT

VAILS GATE FIRE DISTRICT

New Storage Building (Phase I)
New Fire Station (Phase II)

872 Blooming Grove Turnpike
New Windsor, NY 12553

CONTRACT

CONTRACT G
GENERAL CONSTRUCTION

STATUS

FINAL BID DOCUMENT

SHEET TITLE

HVAC FLOW DIAGRAM (1 OF 1)

DRAWING No.

M2 640.02

System Architecture

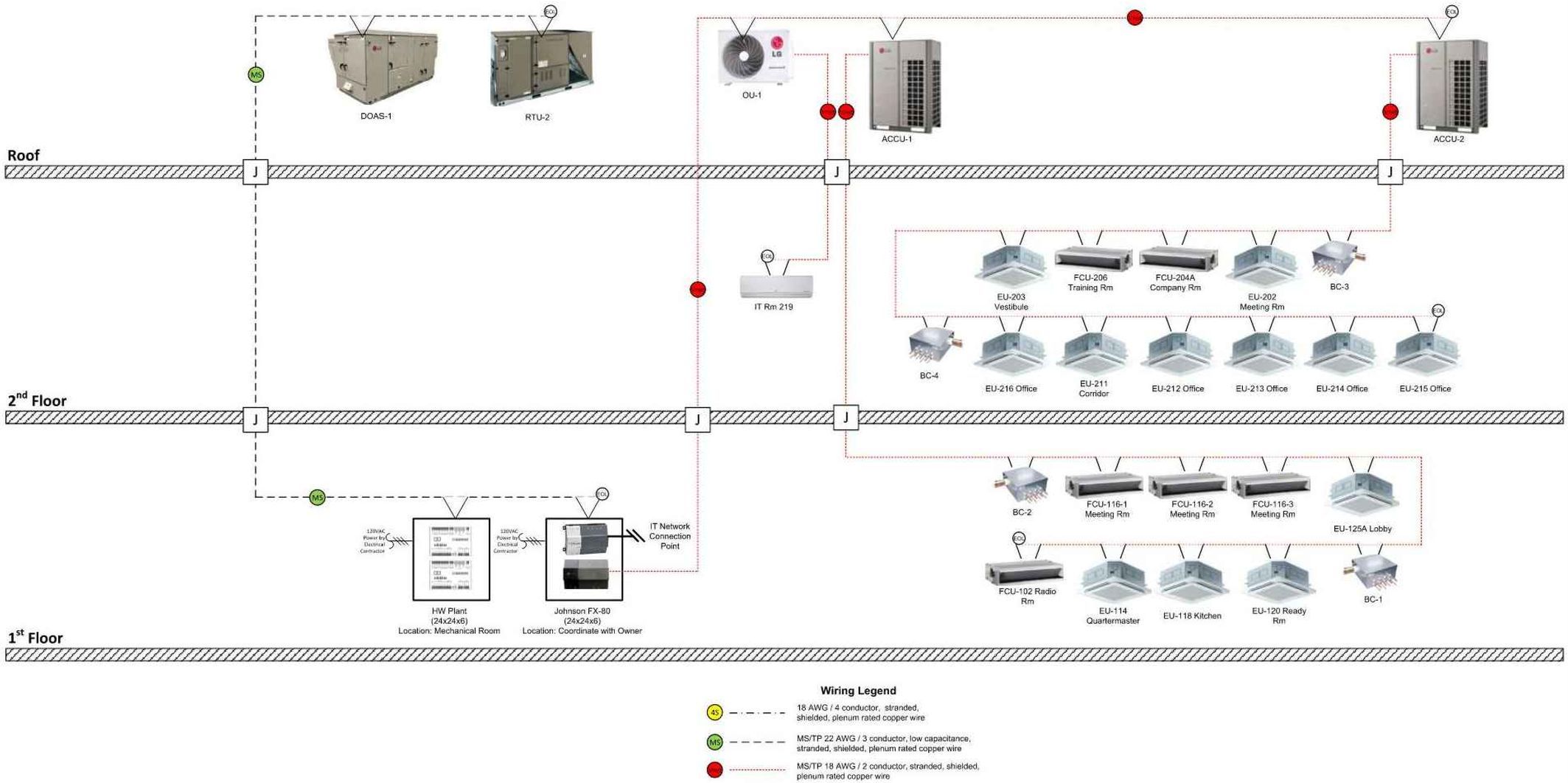

H2M architects + engineers

538 Broad Hollow Road, 4th Floor East
Melville, NY 11747
631.756.8000 • www.h2m.com

CONSULTANTS:

MARK	DATE	DESCRIPTION

STATE OF NEW YORK · JOHN LAHEY · 101303 · LICENSED PROFESSIONAL ENGINEER

"ALTERATION OF THIS DOCUMENT EXCEPT BY A LICENSED PROFESSIONAL IS ILLEGAL"

DESIGNED BY:	DRAWN BY:	CHECKED BY:	REVIEWED BY:
DKR	DKR	MJV	JML
PROJECT No.: VGFD2001	DATE: JULY 2022	SCALE: AS SHOWN	

CLIENT

VAILS GATE FIRE DISTRICT

New Storage Building (Phase I)
New Fire Station (Phase II)

872 Blooming Grove Turnpike
New Windsor, NY 12553

CONTRACT

CONTRACT G
GENERAL CONSTRUCTION

STATUS

FINAL BID DOCUMENT

SHEET TITLE

HVAC CONTROLS DIAGRAM (1 OF 1)

DRAWING No.

M2 650.00

X:\VGFD\Vails Gate Fire Dept\VGFD2001-Vails Gate FD New Firehouse\02.BIM-CADD\Con-docs\hvac\M2 650.00 - Controls Diagrams.dwg Last Modified: Jul 14, 2022 - 2:31pm Plotted on: Jul 15, 2022 - 1:00pm By dragone

ELECTRICAL LEGEND

SYMBOL	DESCRIPTION	COMMENTS
S_3	THREE - WAY SWITCH	46" AFF TO CL UON
S_4	FOUR - WAY SWITCH	46" AFF TO CL UON
S_I	ILLUMINATED SWITCH	46" AFF TO CL UON
S^A	SINGLE POLE SWITCH; "A" INDICATES SWITCH CONTROL	46" AFF TO CL UON
S_D	SINGLE POLE DIMMER SWITCH	46" AFF TO CL UON
S_{3D}	THREE - WAY DIMMER SWITCH	46" AFF TO CL UON
S_K	SINGLE POLE KEYED SWITCH	46" AFF TO CL UON
S_{K3}	KEYED THREE - WAY SWITCH	46" AFF TO CL UON
S_{K4}	KEYED FOUR - WAY SWITCH	46" AFF TO CL UON
S_M	HORSEPOWER RATED SWITCH, WITH INDICATOR (CONTRACTOR SHALL COORDINATE VOLTAGE AND PHASE WITH EQUIPMENT)	46" AFF
S_P	SWITCH AND PILOT LIGHT	
S_T	SWITCH WITH THERMAL OVERLOAD PROTECTION (CONTRACTOR SHALL COORDINATE VOLTAGE AND PHASE WITH EQUIPMENT)	
$S_{OS/VS}$	OCCUPANY/VACANCY SENSOR WITH MANUAL OVERRIDE, WALL MOUNT	
TC	TIME CLOCK	
PC	PHOTOCELL	
PB	PUSH BUTTON	
E,G	EMERGENCY SHUT OFF SWITCH; 'E' INDICATES ELECTRICAL; 'G' INDICATES GAS	
OS	OCCUPANCY SENSOR, CEILING MOUNT	
	OCCUPANCY SENSOR POWER PACK, MOUNTED ABOVE CEILING	
	2 #12 AWG + #12 AWG GND IN 3/4" E.C. CONCEALED IN WALL OR CEILING	
	5 #12 AWG + #12 AWG GND IN 3/4" E.C. CONCEALED IN WALL OR CEILING	
	3 #12 AWG + #12 AWG GND IN 3/4" E.C. CONCEALED IN OR BELOW SLAB	
LP1-35	DEDICATED HOME RUN TO PANEL LP1 FOR CIRCUIT No. 35 ONLY. 2 #12 AWG + #12 AWG GND IN 3/4" E.C. CONCEALED IN WALL OR CEILING	
	SIMPLEX RECEPTACLE: 120V, 20A. COORDINATE MOUNTING HEIGHT WITH MECHANICAL CONTRACTOR TO CLEAR BASEBOARDS.	FLUSH
	DUPLEX RECEPTACLE: 120V, 20A. COORDINATE MOUNTING HEIGHT WITH MECHANICAL CONTRACTOR TO CLEAR BASEBOARDS.	FLUSH
	QUAD RECEPTACLE, DOUBLE DUPLEX RECEPTACLE: 120V, 20A. COORDINATE MOUNTING HEIGHT WITH MECHANICAL CONTRACTOR TO CLEAR BASEBOARDS.	FLUSH
C	DUPLEX RECEPTACLE: 120V, 20A; SUBSCRIPT "C" INDICATES CEILING MOUNT.	FLUSH
	DUPLEX RECEPTACLE: 120V, 20A; FLOOR MOUNTED.	FLUSH
IG	ISOLATED GROUND DUPLEX RECEPTACLE. COORDINATE MOUNTING HEIGHT WITH MECHANICAL CONTRACTOR TO CLEAR BASEBOARDS.	FLUSH
GFI	DUPLEX RECEPTACLE: 120V, 20A; WITH GROUND FAULT INDICATOR. COORDINATE MOUNTING HEIGHT WITH MECHANICAL CONTRACTOR TO CLEAR BASEBOARDS.	FLUSH
UC	DUPLEX RECEPTACLE: 120V, 20A; SUBSCRIPT "UC" INDICATES UNDER COUNTER	AS PER ENGINEER
CT	DUPLEX RECEPTACLE: 120V, 20A; SUBSCRIPT "CT" INDICATES COUNTER TOP.	AS PER ENGINEER
WP	DUPLEX RECEPTACLE: 120V, 20A; SUBSCRIPT "WP" INDICATED WEATHER PROOF	AS PER ENGINEER
208	SPECIAL PURPOSE OUTLET: 208V, VERIFY NEMA CONFIGURATION WITH EQUIPMENT MANUFACTURER.	AS PER ENGINEER
TL	TWISTED LOCK RECEPTACLE: 125V, 20A, 3 WIRE; UNLESS OTHERWISE NOTED.	AS PER ENGINEER
	SURFACE RACEWAY WITH 2 GROUNDED AND ISOLATED TYPE DUPLEX RECEPTACLES AND 1 DATA OUTLET PER POSITION, 18" AFF UNLESS OTHERWISE NOTED.	
	TELEPHONE/POWER POLE	
S1	MAGNETIC STARTER "S1"; SEE STARTER SCHEDULE	
DS1	DISCONNECTION SWITCH "DS1"; SEE DISCONNECT SWITCH SCHEDULE.	
	JUNCTION BOX	
4X	NEMA 4X STAINLESS STEEL JUNCTION BOX WITH GASKET COVER.	
S	JUNCTION BOX RECESSED IN WALL WITH BLANK COVER, PROVIDE 3/4" E.C. AND DRAG LINE TO ABOVE FINISHED CEILING. MOUNT 18" AFF, UNLESS OTHERWISE NOTED.	
KF	FOR KEY FOB, JUNCTION BOX RECESSED IN WALL WITH BLANK COVER. PROVIDE 3/4" E.C. AND DRAG LINE TO ABOVE FINISHED CEILING.	
T1	TRANSFORMER "T1"; SEE TRANSFORMER SCHEDULE.	
	ELECTRICAL PANEL "P1", RECESSED; SEE PANEL SCHEDULE.	
P1	ELECTRICAL PANEL "P1", SURFACE MOUNT; SEE PANEL SCHEDULE.	
	CONDUIT GOING UP.	
	CONDUIT GOING DOWN.	
	PULLBOX	
T	TELEPHONE. PROVIDE CAT-6A CABLE IN 3/4" E.C. TO IT ROOM (219) WITH BOX RECESSED IN WALL WITH RJ11 COVER PLATE.	
TV	CABLE TELEVISION. PROVIDE 3/4" E.C. WITH DRAG LINE TO AFC AND EMPTY J.BOX RECESSED IN WALL TO IT ROOM (219) WITH BOX RECESSED IN WALL WITH BLANK COVER PLATE.	
D	DATA. PROVIDE CAT-6A CABLE IN 3/4" E.C. TO IT ROOM (219) WITH BOX RECESSED IN WALL WITH RJ45 COVER PLATE.	
D/T	COMBINED DATA AND TV. PROVIDE CAT-6A CABLE IN 3/4" E.C. TO IT ROOM (219) WITH BOX RECESSED IN WALL WITH RJ45 COVER PLATE.	
S	SECURITY CAMERA. PROVIDE CA 3/4" E.C. WITH DRAG LINE TO AFC AND EMPTY J. BOX RECESSED IN WALL WITH BLANK COVER.	

ABBREVIATION	DESCRIPTION
AFF	ABOVE FINISH FLOOR
AFC	ABOVE FINISH CEILING
AFG	ABOVE FINISH GRADE
AMP, A	AMPERE
ATS	AUTOMATIC TRANSFER SWITCH; SEE TRANSFER SWITCH SCHEDULE
AWG	AMERICAN WIRE GUAGE
BFC	BELOW FINISHED CEILING
CL	CENTERLINE
CT	COUNTERTOP
EC	ELECTRICAL CONDUIT
GFCI	GROUND FAULT CIRCUIT INTERRUPTER
GFI	GROUND FAULT INDICATOR
CH	CENTRAL HUDSON (LOCAL ELECTRIC UTILITY)
MCB	MAIN CIRCUIT BREAKER
MLO	MAIN LUGS ONLY
NTS	NOT TO SCALE
UON	UNLESS OTHERWISE NOTED
UC	UNDERCOUNTER
V	VOLTS
VAC	VOLTS ALTERNATING CURRENT
VDC	VOLT DIRECT CURRENT
X-FMR	TRANSFORMER
WP	WEATHERPROOF
CH	CENTRAL HUDSON (LOCAL UTILITY COMPANY)

SYMBOL	DESCRIPTION	COMMENTS
T	LINE VOLTAGE THERMOSTAT, 120V, 10A.	
	CIRCUIT BREAKER WITH TRIP AND POLES AS NOTED.	
TS1	TRANSFER SWITCH TS1; SEE TRANSFER SWITCH SCHEDULE.	
M.C.B 30A/2P; PANEL "P1"	DISTRIBUTION PANEL P1 WITH 30A, 2 POLE M.C.B.; SEE DISTRIBUTION PANEL SCHEDULE.	
	DISCONNECT SWITCH DS1, 100A, 3 POLES; SEE DISCONNECT SWITCH SCHEDULE.	
DS3 100A/3P	FUSED DISCONNECT SWITCH DS2, FUSED AT 40A, 3 POLES; SEE DISCONNECT SWITCH SCHEDULE.	
G1	GENERATOR SET G1	
M	ELECTRIC METER AND METER PAN AS PER PSEG REQUIREMENTS.	
5	MOTOR, NUMBER INDICATED HORSEPOWER.	
	CURRENT TRANSFORMER.	
PTS	VOLTAGE TRANSFORMER.	
T2	TRANSFORMER WITH SIZE, PRIMARY AND SECONDARY VOLTAGES AS NOTED.	
RVRM 10	REDUCED VOLTAGE SOLID STATE RAMPING MODULE, SIZED FOR 10 H.P.	
RVSS 150	REDUCED VOLTAGE SOLID STATE STARTER, SIZED FOR 150 H.P.	
VFD 25	VARIABLE FREQUENCY DRIVE, RATED FOR 25 H.P.	
FVNR 5	FULL VOLTAGE NON-REVERSING STARTER, NEMA SIZE 6	
FVR 5	FULL VOLTAGE REVERSING STARTER, NEMA SIZE 5	
JJS	FAST ACTING SOLID STATE FUSES AS PER MANUFACTURER.	
	MULTIPLE BRANCH CIRCUITS AS REQUIRED.	
	CONTROL CIRCUIT; MIN 2 #12 AWG IN 3/4" E.C.	

ELECTRICAL SHEET LIST

Sheet Number	Full Sheet Name
E1 001.00.	ELECTRICAL LEGENDS PHASE 1
E1 100.00.	FIRST FLOOR & MEZZANINE ELECTRICAL LIGHTING AND POWER PLANS PHASE 1
E1 500.00.	STORAGE BUILDING ELECTRICAL DETAILS PHASE 1
E1 501.00.	STORAGE BUILDING ELECTRICAL DETAILS PHASE 1
E1 502.00.	STORAGE BUILDING ELECTRICAL GENERATOR DETAILS PHASE 1
E1 503.00.	STORAGE BUILDING ELECTRICAL GENERATOR DETAILS PHASE 1
E1 600.00.	STORAGE BUILDING ELECTRICAL SINGLE LINE DIAGRAM PHASE 1
E2 001.00	ELECTRICAL GENERAL NOTES AND LEGENDSNEW FIRE STATION PHASE 2
E2 101A.00	PARTIAL FIRST FLOOR ELECTRICAL POWER PLAN NEW FIRE STATION PHASE 2 PHASE 2
E2 101B.00	PARTIAL FIRST FLOOR ELECTRICAL POWER PLAN NEW FIRE STATION PHASE 2 PHASE 2
E2 102A.00	PARTIAL SECOND / MEZZANINE FLOOR ELECTRICAL POWER PLAN NEW FIRE STATION PHASE 2
E2 102B.00	PARTIAL SECOND FLOOR ELECTRICAL POWER PLAN NEW FIRE STATION PHASE 2
E2 103A.00	PARTIAL ROOF ELECTRICAL POWER PLAN NEW FIRE STATION PHASE 2
E2 103B.00	PARTIAL ROOF ELECTRICAL POWER PLAN NEW FIRE STATION PHASE 2
E2 111A.00	PARTIAL FIRST FLOOR HVAC POWER PLAN NEW FIRE STATION PHASE 2
E2 111B.00	PARTIAL FIRST FLOOR HVAC POWER PLAN NEW FIRE STATION PHASE 2
E2 112A.00	PARTIAL SECOND / MEZZANINE FLOOR HVAC POWER PLAN NEW FIRE STATION PHASE 2
E2 112B.00	PARTIAL SECOND FLOOR HVAC POWER PLAN NEW FIRE STATION PHASE 2
E2 114B.00	ROOF HVAC POWER PLAN NEW FIRE STATION PHASE 2
E2 121A.00	PARTIAL FIRST FLOOR ELECTRICAL LIGHTING PLAN NEW FIRE STATION PHASE 2
E2 121B.00	PARTIAL FIRST FLOOR ELECTRICAL LIGHTING PLAN NEW FIRE STATION PHASE 2
E2 122A.00	PARTIAL SECOND / MEZZANINE FLOOR ELECTRICAL LIGHTING PLAN NEW FIRE STATION PHASE 2
E2 122B.00	PARTIAL SECOND FLOOR ELECTRICAL LIGHTING PLAN NEW FIRE STATION PHASE 2
E2 401.00	ELECTRICAL ENLARGE PLANS NEW FIRE STATION PHASE 2
E2 500.00	ELECTRICAL ELECTRICAL DETAILS BUILDING PHASE 2
E2 501.00	ELECTRICAL DETAILS PHASE 2
E2 502.00	ELECTRICAL GENERATOR DETAILS PHASE 2
E2 503.00	ELECTRICAL GENERATOR DETAILS PHASE 2
E2 600.00	ELECTRICAL SCHEDULES BUILDING PHASE 2
E2 601.00	ELECTRICAL PANEL SCHEDULES NEW FIRE STATION PHASE 2
E2 610.00	ELECTRICAL ELECTRICAL SINGLE LINE DIAGRAM BUILDING PHASE 2
ES 100.00	ELECTRICAL SITE PLAN PHASE 2

H2M architects + engineers

538 Broad Hollow Road, 4th Floor East
Melville, NY 11747
631.756.8000 • www.h2m.com

CONSULTANTS:

MARK	DATE	DESCRIPTION

STATE OF NEW YORK · ANTHONY M. CIMINO · 082583 · LICENSED PROFESSIONAL ENGINEER

*ALTERATION OF THIS DOCUMENT EXCEPT BY A LICENSED PROFESSIONAL IS ILLEGAL.

DESIGNED BY:	DRAWN BY:	CHECKED BY:	REVIEWED BY:
SMP/CMP	SMP/CMP	-	-

PROJECT No:	DATE:	SCALE:
VGFD2001	JULY 2022	AS SHOWN

CLIENT

VAILS GATE FIRE DISTRICT

New Storage Building (Phase I)
New Fire Station (Phase II)

872 Blooming Grove Turnpike
New Windsor, NY 12553

CONTRACT

CONTRACT G
GENERAL CONSTRUCTION

STATUS

REGULATORY REVIEW

SHEET TITLE

ELECTRICAL
GENERAL NOTES AND LEGENDSNEW
FIRE STATION
PHASE 2

DRAWING No.

E2 001.00

C:\Users\jpsh\Documents\VGFD2001-Central21-E_jpsh.rvt

7/15/2022 3:51:22 PM

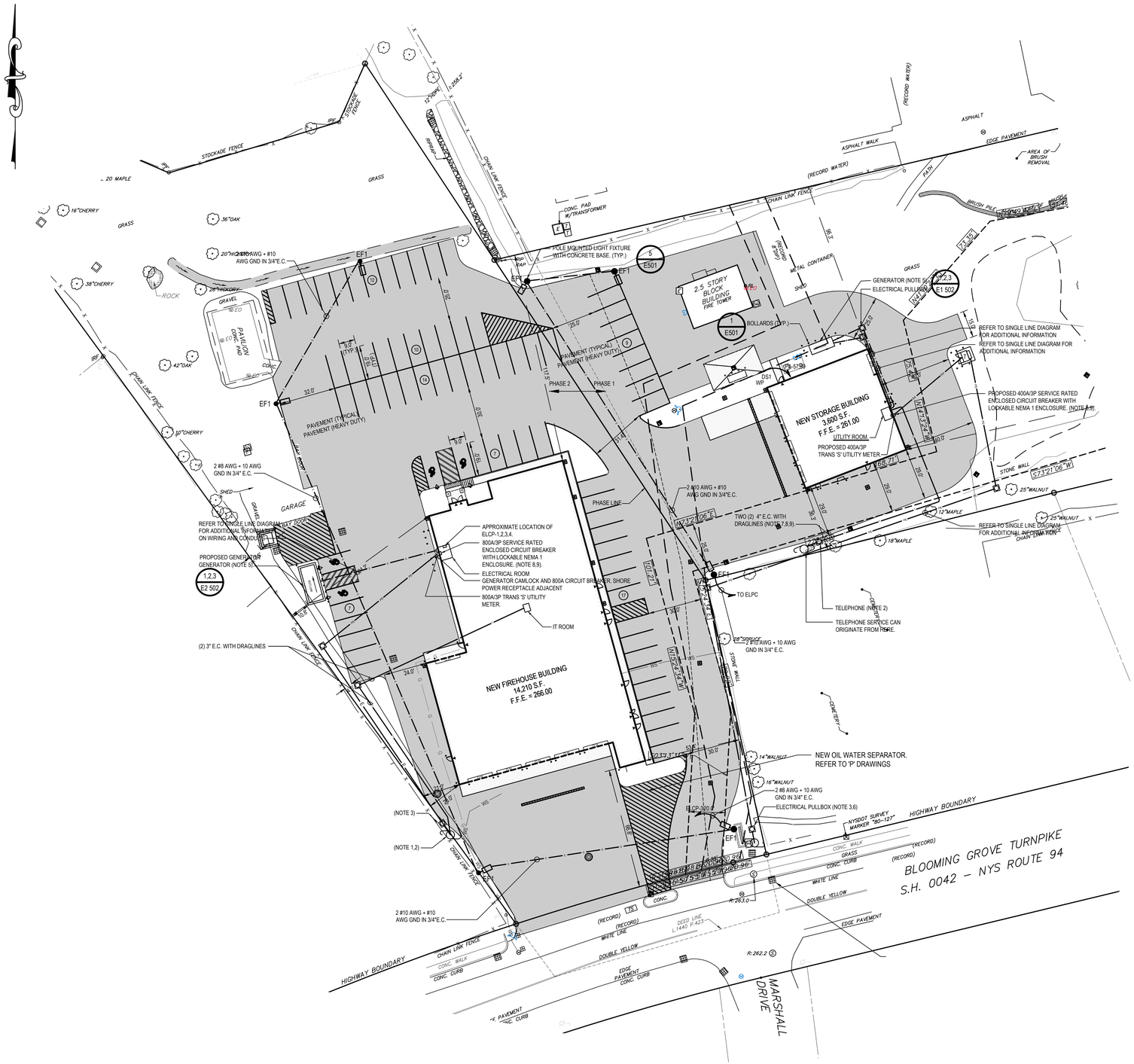

1 Main Fire House & Storage Building Site Plan

SCALE: 1" = 30'- 0"

GRAPHIC SCALE

30 0 15 30

(IN FEET)
1 inch = 30 ft.

811 1-800-272-4480
Dig Safely. New York
Call811
before you dig
www.digsafelynewyork.com

SITE PLAN LEGEND

	CURB
	UTILITY POWER/TELEPHONE POLE
T	NEW TELEPHONE SERVICE
E	NEW ELECTRICAL LINES
PE	NEW PRIMARY ELECTRIC SERVICE
x x x x	EXISTING FENCE
	ELECTRIC PULL BOX
HH	HANDHOLE
T	TRANSFORMER

ELECTRICAL SITE PLAN GENERAL NOTES:

G1. CONTRACTOR SHALL INSPECT CONSTRUCTION SITE PRIOR TO SUBMISSION OF BIDS AND SHALL MAKE NO ADDITIONAL CLAIMS REGARDING SITE CONDITIONS THEREAFTER.

G2. LOCATION OF ALL UNDERGROUND UTILITIES BOTH PUBLIC AND CUSTOMER OWNED, WERE OBTAINED FROM EITHER MAPS, SURVEYS, DRAWINGS AND RECORDS SUPPLIED BY OTHERS. THE OWNER AND ENGINEER DO NOT GUARANTEE OR ACCEPT RESPONSIBILITY FOR ANY DAMAGE TO SUCH FACILITIES DUE TO DISCREPANCIES IN LOCATION AND SIZE SHOWN ON THE PLANS OR THOSE UTILITIES NOT SHOWN. THE CONTRACTOR IS RESPONSIBLE FOR OBTAINING A PRIVATE MARKOUT COMPANY FOR DETERMINING THE LOCATION OF ALL UNDERGROUND UTILITIES PRIOR TO BEGINNING WORK. CONTRACTOR SHALL LOCATE ALL UTILITIES WITHIN PROXIMITY OF CONSTRUCTION LIMITS.

G3. CONTRACTOR SHALL COMPLETELY RESTORE ALL AREAS DISTURBED DURING CONSTRUCTION, INCLUDING BUT NOT LIMITED TO GRASS AREAS, LANDSCAPING, PAVEMENTS, SIDEWALKS, CURBING AND IN-GROUND SPRINKLER SYSTEMS.

G4. THE CONTRACTOR SHALL PERFORM DAILY CLEAN-UP OPERATIONS WHICH INCLUDE REMOVAL OF DEBRIS AND EXCESS CONSTRUCTION MATERIAL TO THE SATISFACTION OF THE OWNER AND THE ENGINEER.

G5. DURING ALL NON-WORKING HOURS, THE CONTRACTOR WILL BE REQUIRED TO STORE ALL EQUIPMENT AND MATERIALS WITHIN THE AREA DESIGNATED BY THE ENGINEER AT THE PROJECT SITE.

G6. PROVIDE TEMPORARY FENCING TO PROTECT WORK AREAS.

G7. CONTRACTOR SHALL MINIMIZE REMOVAL OF EXISTING TREES. CONTRACTOR SHALL BE RESPONSIBLE FOR SITE LAYOUT, TAGGING AND REMOVAL OF TREES REQUIRED TO COMPLETE ALL WORK. OWNER SHALL APPROVE TREES TO BE REMOVED PRIOR TO ACTUAL REMOVALS. REMOVALS SHALL INCLUDE REMOVAL OF COMPLETE STUMP AND ROOT SYSTEM. CONTRACTOR NOT PERMITTED TO GRIND STUMPS.

G8. CONCRETE SIDEWALKS SHALL BE SAWCUT BACK TO EXPANSION/ CONTROL JOINTS.

ELECTRICAL SITE PLAN KEY NOTES:

1. NEW ELECTRIC SERVICE RISER AS PER UTILITY REQUIREMENTS.
2. NEW TELEPHONE SERVICE RISER AS PER UTILITY REQUIREMENT.
3. NEW PROPERTY LINE PULL BOX AS PER UTILITY REQUIREMENTS.
4. EXISTING TRANSFORMER POLE MOUNTED BOX AS PER UTILITY REQUIREMENTS.
5. NEW GENERATOR AND CONCRETE FOUNDATION.
6. NEW PULL BOX. SITE PLAN SHOWS MINIMUM REQUIRED PULL BOXES. PROVIDE ADDITIONAL PULL BOXES AS REQUIRED BY NEC AND UTILITY SERVICE.
7. SAWCUT EXISTING PAVEMENT/SIDEWALK/CURBING FOR INSTALLATION OF NEW CONDUITS. REMOVE AND DISPOSE OF ALL DEBRIS.
8. CONTRACTOR SHALL STUB ALL CONDUITS INTO BUILDINGS BELOW GRADE. NO EXTERIOR CONDUITS PERMITTED TO RUN EXPOSED ON EXTERIOR WALLS. CORE DRILL FOUNDATIONS AS REQUIRED. SEAL ALL CONDUIT PENETRATIONS WITH NON-SHRINK GROUT.
9. PROVIDE DUCT SEAL ON INTERIOR OF CONDUITS AND LINK SEAL ON EXTERIOR OF CONDUITS.

NOTE:

SEE G000.00 FOR PHASE 1 ALTERNATE INFORMATION

H2M architects + engineers
538 Broad Hollow Road, 4th Floor East
Melville, NY 11747
631.756.8000 • www.h2m.com

CONSULTANTS:

MARK	DATE	DESCRIPTION

STATE OF NEW YORK · ANTHONY W. CIOFFI · 092583 · LICENSED PROFESSIONAL ENGINEER

"ALTERATION OF THIS DOCUMENT EXCEPT BY A LICENSED PROFESSIONAL IS ILLEGAL"

DESIGNED BY:	DRAWN BY:	CHECKED BY:	REVIEWED BY:
SMP	SMP	AWK	AWK
PROJECT No.: VGFD2001	DATE: JULY 2022	SCALE: AS SHOWN	

CLIENT

VAILS GATE FIRE DISTRICT

New Storage Building (Phase I)
New Fire Station (Phase II)

872 Blooming Grove Turnpike
New Windsor, NY 12553

CONTRACT

CONTRACT G
GENERAL CONSTRUCTION

STATUS

FINAL BID DOCUMENT

SHEET TITLE

ELECTRICAL SITE PLAN
NEW FIRE STATION
AND STORAGE BUILDING
PHASE 1 AND 2

DRAWING No.

ES 100.00

\\h2m.com\shares\Projects\VGFD \Vails Gate Fire Dept\VGFD2001-\Vails Gate FD-New Firehouse\02-BIM-CADD\Civil-dwg\Main Fire House\ES-100.00 - Electrical Site Plan.dwg Last Modified: Jul 15, 2022 - 11:29am Plotted on: Jul 15, 2022 - 3:00pm By pyoskovich

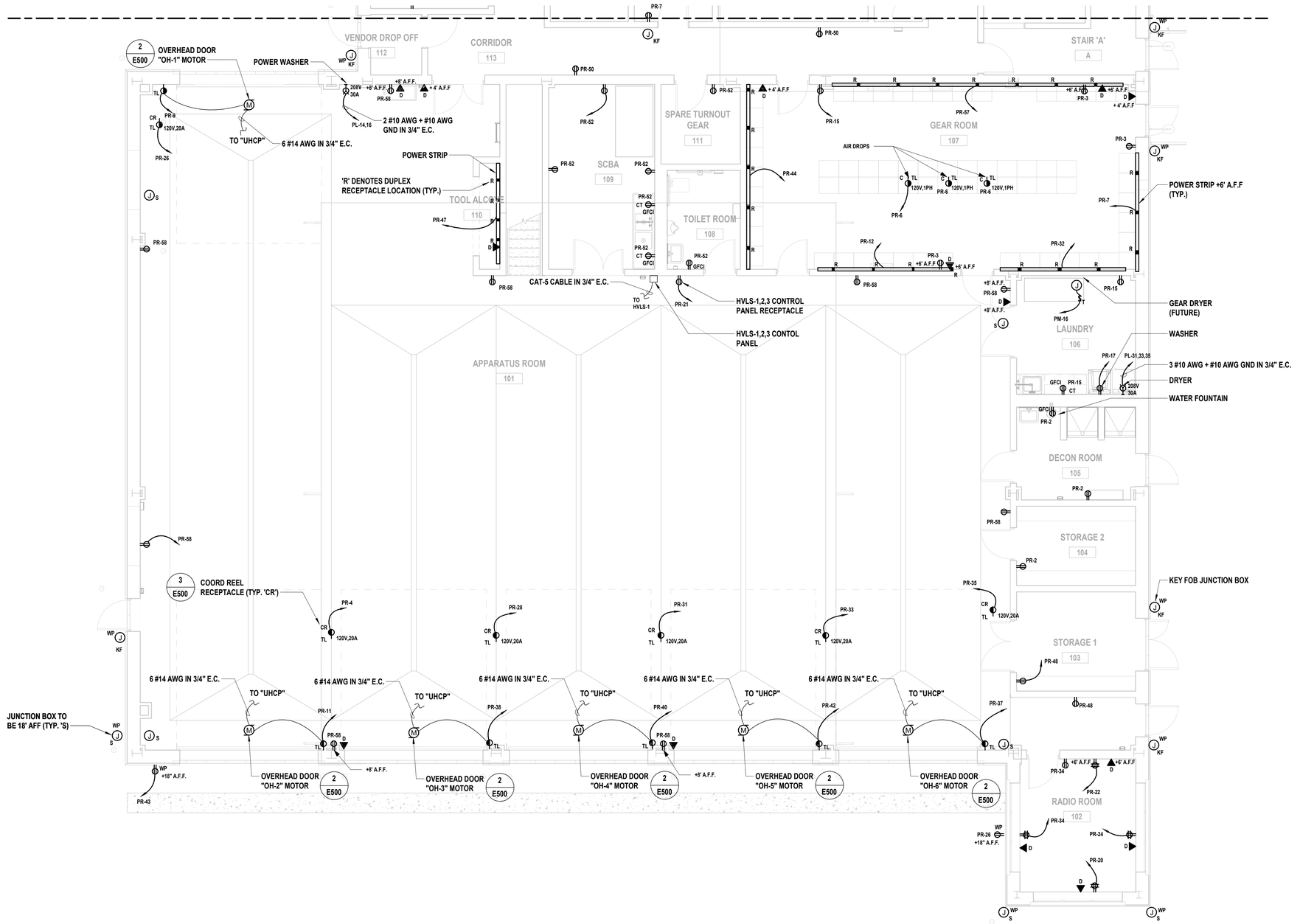

1 Electrical Partial First Floor Power Plan
SCALE: 3/16" = 1'-0"

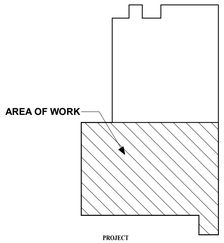

Key Plan

H2M architects + engineers
538 Broad Hollow Road, 4th Floor East
Melville, NY 11747
631.756.8000 • www.h2m.com

CONSULTANTS:

MARK	DATE	DESCRIPTION

"ALTERATION OF THIS DOCUMENT EXCEPT BY A LICENSED PROFESSIONAL IS ILLEGAL"

DESIGNED BY:	DRAWN BY:	CHECKED BY:	REVIEWED BY:
SMP/CMP	SMP/CMP		

PROJECT No:	DATE:	SCALE:
VGFD2001	JULY 2022	AS SHOWN

CLIENT
VAILS GATE FIRE DISTRICT

New Storage Building (Phase I)
New Fire Station (Phase II)

872 Blooming Grove Turnpike
New Windsor, NY 12553

CONTRACT
CONTRACT G
GENERAL CONSTRUCTION

STATUS
REGULATORY REVIEW

SHEET TITLE
PARTIAL FIRST FLOOR ELECTRICAL POWER PLAN
NEW FIRE STATION PHASE 2
PHASE 2

DRAWING No.
E2 101A.00

C:\Users\jjoshi\Documents\VGFD2001-Central21-E_rjoshi.rvt
7/15/2022 3:36:22 PM

NOTES:

1. POWER AT DISPLAY CASES TO BE COORDINATED WITH DISPLAY CASE LIGHTING REQUIREMENTS FROM DISPLAY CASE MANUFACTURER

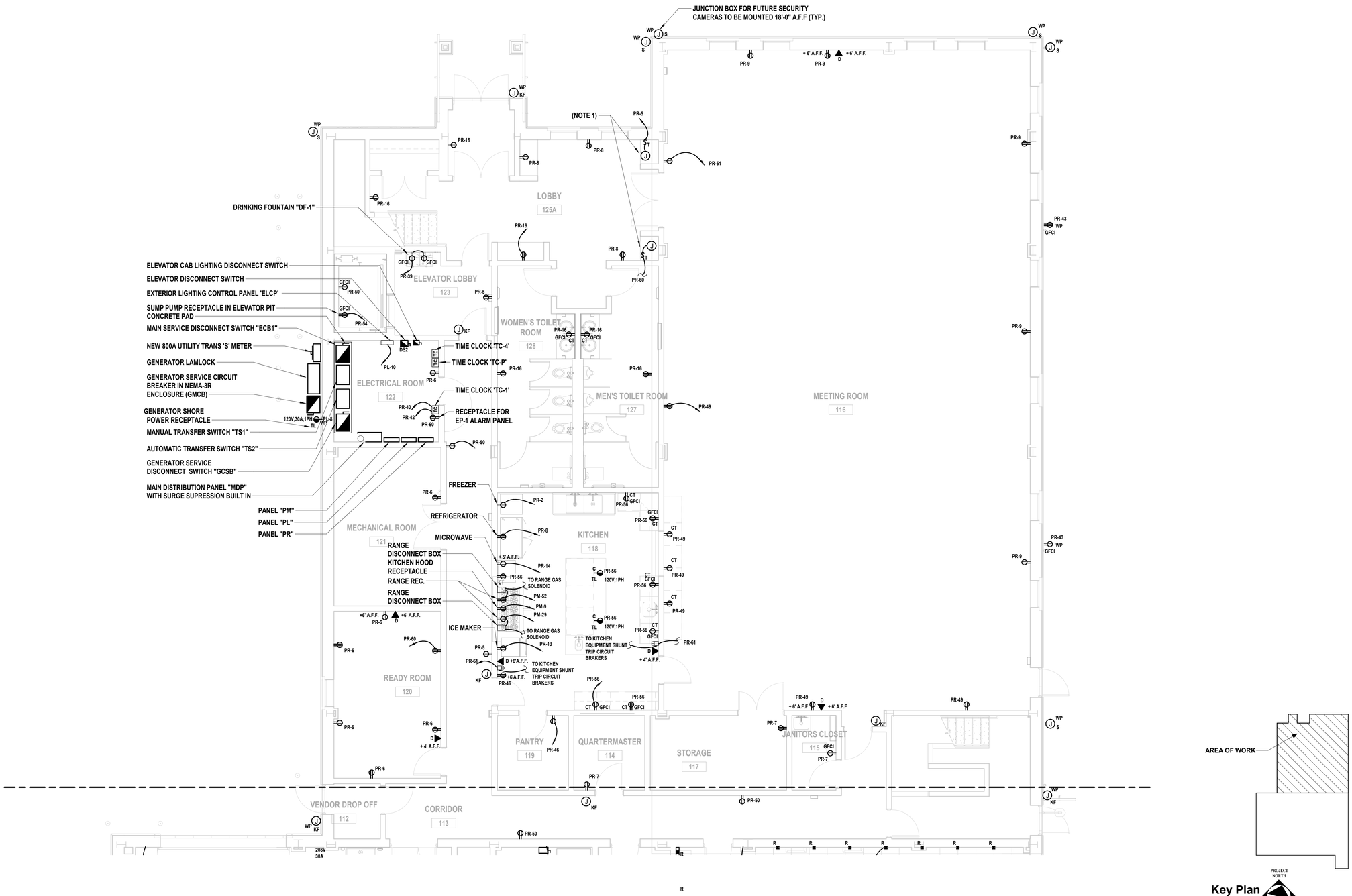

1 **Electrical Partial First Floor Power Plan**
SCALE: 3/16" = 1'-0"

Key Plan

PROJECT NORTH

H2M architects + engineers

538 Broad Hollow Road, 4th Floor East
Melville, NY 11747
631.756.8000 • www.h2m.com

CONSULTANTS:

MARK	DATE	DESCRIPTION

STATE OF NEW YORK · ANTHONY WOONG-IN WAN · 092583 · LICENSED PROFESSIONAL ENGINEER

"ALTERATION OF THIS DOCUMENT EXCEPT BY A LICENSED PROFESSIONAL IS ILLEGAL"

DESIGNED BY:	DRAWN BY:	CHECKED BY:	REVIEWED BY:
SMP/CMP	SMP/CMP		
PROJECT No: VGFD2001	DATE: JULY 2022	SCALE: AS SHOWN	

CLIENT

VAILS GATE FIRE DISTRICT

New Storage Building (Phase I)
New Fire Station (Phase II)

872 Blooming Grove Turnpike
New Windsor, NY 12553

CONTRACT

CONTRACT G
GENERAL CONSTRUCTION

STATUS

REGULATORY REVIEW

SHEET TITLE

PARTIAL FIRST FLOOR ELECTRICAL POWER PLAN
NEW FIRE STATION PHASE 2
PHASE 2

DRAWING No.

E2 101B.00

C:\Users\rjoshi\Documents\VGFD2001-Central21-E_rjoshi.rvt

7/15/2022 3:36:25 PM

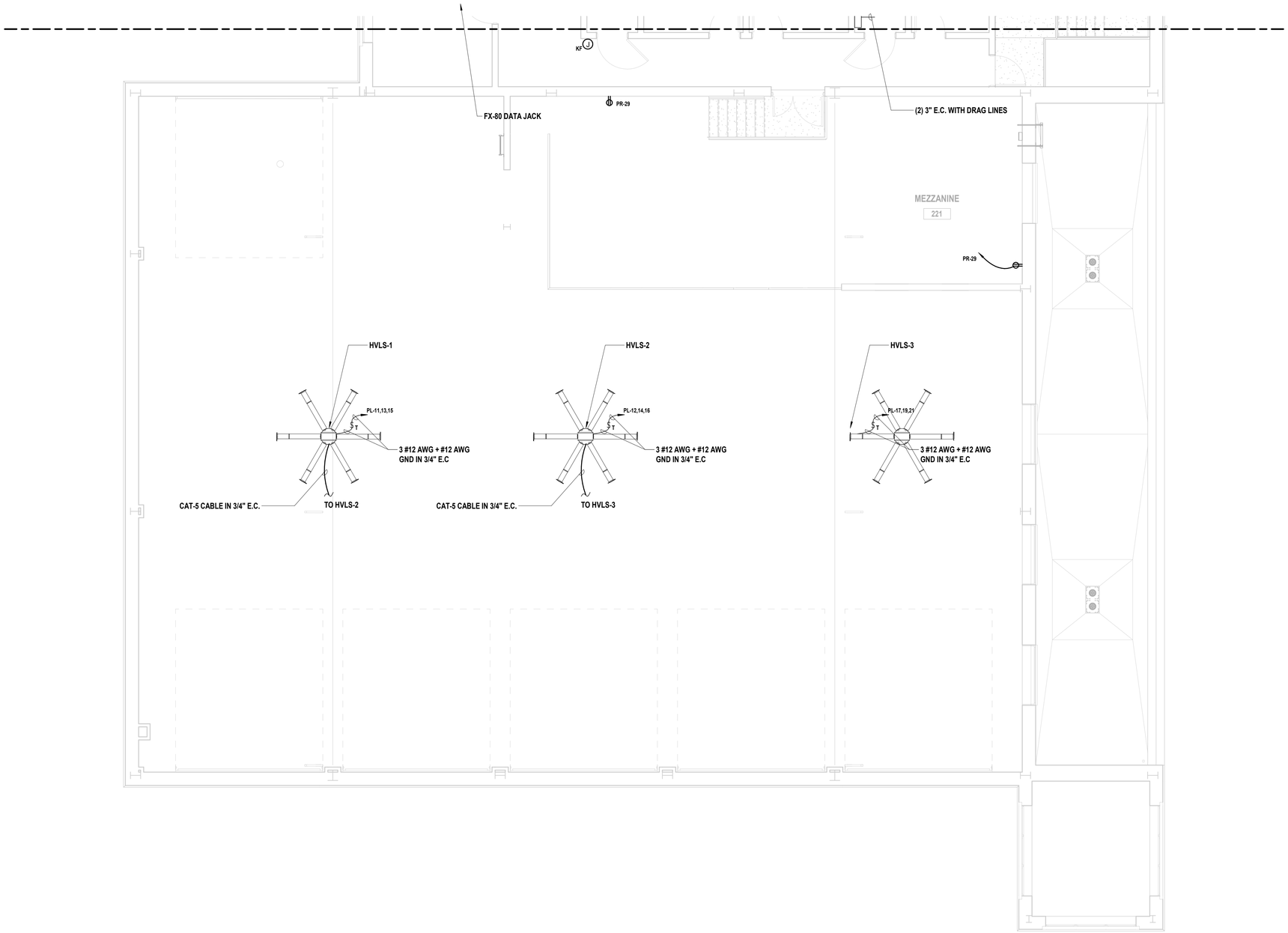

1 **Electrical Partial Second / Mezzanine Floor Power Plan**
SCALE: 3/16" = 1'-0"

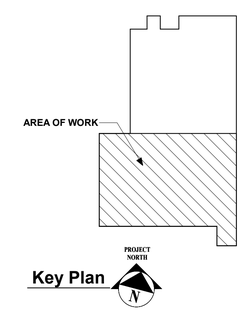

Key Plan

C:\Users\rjoshi\Documents\VGFD2001-Central21-E_rjoshi.rvt

7/15/2022 3:36:26 PM

H2M architects + engineers

538 Broad Hollow Road, 4th Floor East
Melville, NY 11747
631.756.8000 • www.h2m.com

CONSULTANTS:

MARK	DATE	DESCRIPTION

STATE OF NEW YORK
ANTHONY WOONG-WAH
LICENSED PROFESSIONAL ENGINEER
092583

"ALTERATION OF THIS DOCUMENT EXCEPT BY A LICENSED PROFESSIONAL IS ILLEGAL."

DESIGNED BY:	DRAWN BY:	CHECKED BY:	REVIEWED BY:
Designer	Author		

PROJECT No:	DATE:	SCALE:
VGFD2001	JULY 2022	AS SHOWN

CLIENT

VAILS GATE FIRE DISTRICT

New Storage Building (Phase I)
New Fire Station (Phase II)

872 Blooming Grove Turnpike
New Windsor, NY 12553

CONTRACT

CONTRACT G
GENERAL CONSTRUCTION

STATUS

REGULATORY REVIEW

SHEET TITLE

PARTIAL SECOND / MEZZANINE FLOOR ELECTRICAL POWER PLAN
NEW FIRE STATION
PHASE 2

DRAWING No.

E2 102A.00

NOTES:

1. POWER AT DISPLAY CASES TO BE COORDINATED WITH DISPLAY CASE LIGHTING REQUIREMENTS FROM DISPLAY CASE MANUFACTURER
2. FINAL LOCATIONS OF RECEPTACLES TO BE DETERMINED IN FIELD WITH OWNER

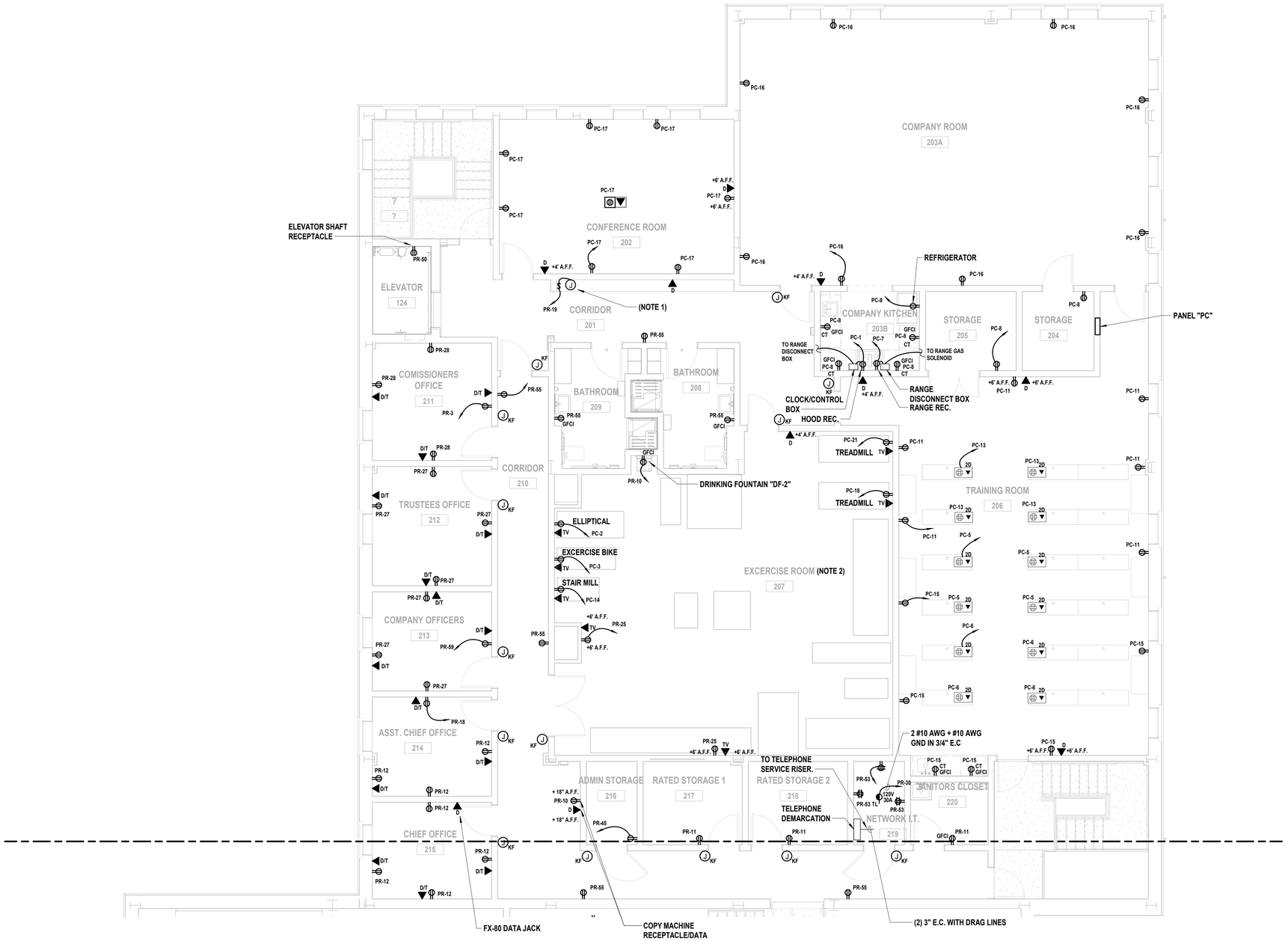

1 **Electrical Partial Second Floor Power Plan**
SCALE: 3/16" = 1'-0"

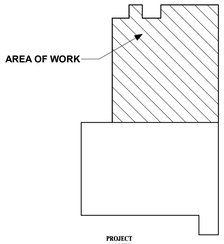

Key Plan

PROJECT NORTH

H2M architects + engineers
538 Broad Hollow Road, 4th Floor East
Melville, NY 11747
631.756.8000 • www.h2m.com

CONSULTANTS:

MARK	DATE	DESCRIPTION

STATE OF NEW YORK · ANTHONY WOONG-IN KIM · 092583 · LICENSED PROFESSIONAL ENGINEER

"ALTERATION OF THIS DOCUMENT EXCEPT BY A LICENSED PROFESSIONAL IS ILLEGAL"

DESIGNED BY:	DRAWN BY:	CHECKED BY:	REVIEWED BY:
SMP/CMP	SMP/CMP		
PROJECT No: VGFD2001	DATE: JULY 2022	SCALE: AS SHOWN	

CLIENT
VAILS GATE FIRE DISTRICT

New Storage Building (Phase I)
New Fire Station (Phase II)

872 Blooming Grove Turnpike
New Windsor, NY 12553

CONTRACT
CONTRACT G
GENERAL CONSTRUCTION

STATUS
REGULATORY REVIEW

SHEET TITLE
PARTIAL SECOND FLOOR ELECTRICAL POWER PLAN NEW FIRE STATION PHASE 2

DRAWING No.
E2 102B.00

C:\Users\jposhi\Documents\VGFD2001-Central21-E_jposhi.rvt
7/15/2022 3:36:29 PM

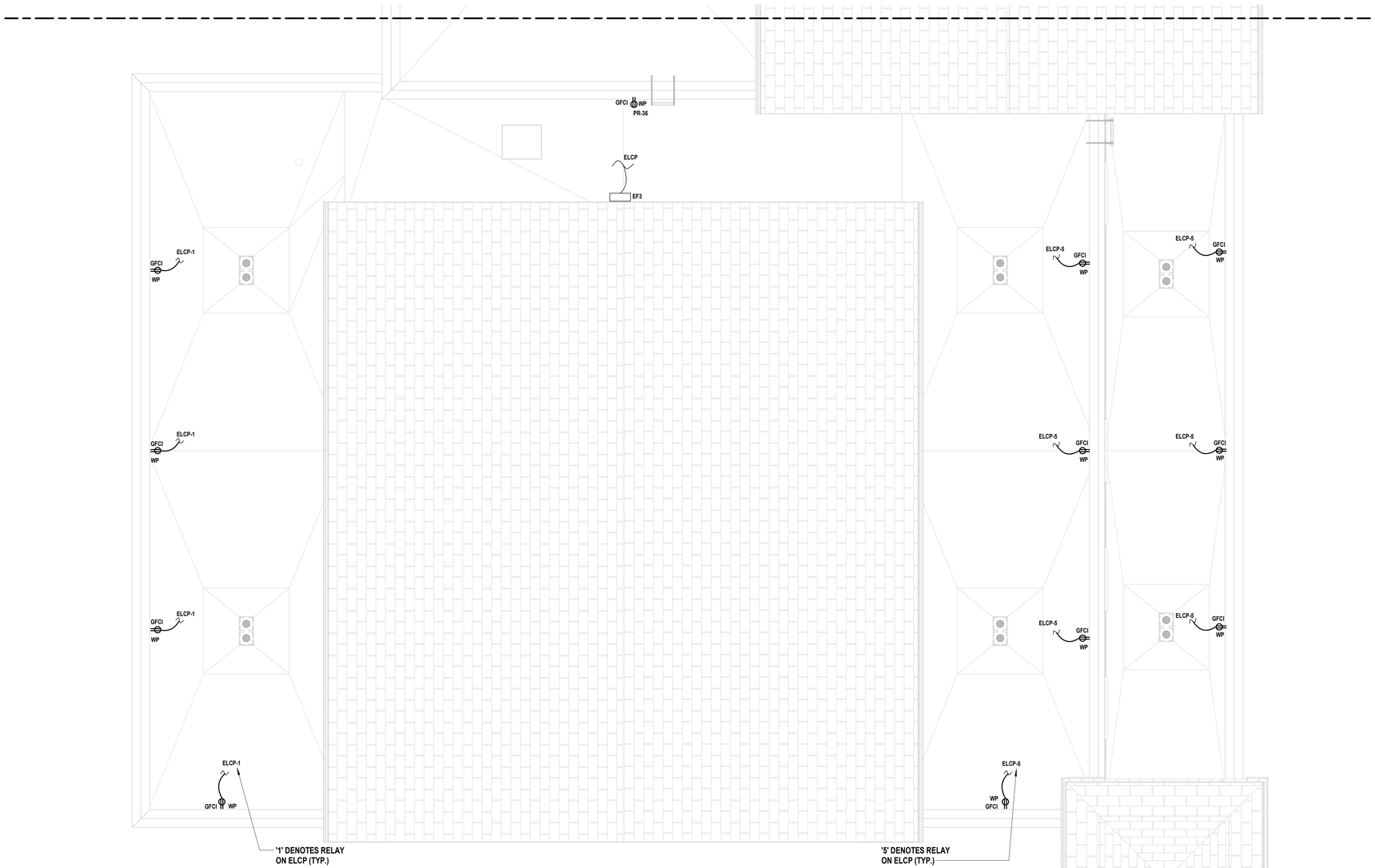

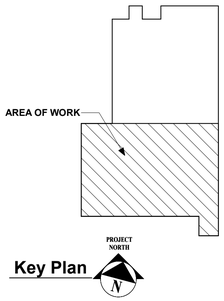

Key Plan

1 Partial Roof Electrical Power Plan
SCALE: 3/16" = 1'-0"

C:\Users\jposhi\Documents\VGFD2001-Central21-E_jposhi.rvt

7/15/2022 3:36:30 PM

H2M architects + engineers

538 Broad Hollow Road, 4th Floor East
Melville, NY 11747
631.756.8000 • www.h2m.com

CONSULTANTS:

MARK	DATE	DESCRIPTION

STATE OF NEW YORK
ANTHONY WOONG-IN WAN
LICENSED PROFESSIONAL ENGINEER
092583

"ALTERATION OF THIS DOCUMENT EXCEPT BY A LICENSED PROFESSIONAL IS ILLEGAL."

DESIGNED BY:	DRAWN BY:	CHECKED BY:	REVIEWED BY:
SMP/CMP	SMP/CMP		

PROJECT No:	DATE:	SCALE:
VGFD2001	JULY 2022	AS SHOWN

CLIENT

VAILS GATE FIRE DISTRICT

New Storage Building (Phase I)
New Fire Station (Phase II)

872 Blooming Grove Turnpike
New Windsor, NY 12553

CONTRACT

CONTRACT G
GENERAL CONSTRUCTION

STATUS

REGULATORY REVIEW

SHEET TITLE

PARTIAL ROOF ELECTRICAL POWER PLAN
NEW FIRE STATION
PHASE 2

DRAWING No.

E2 103A.00

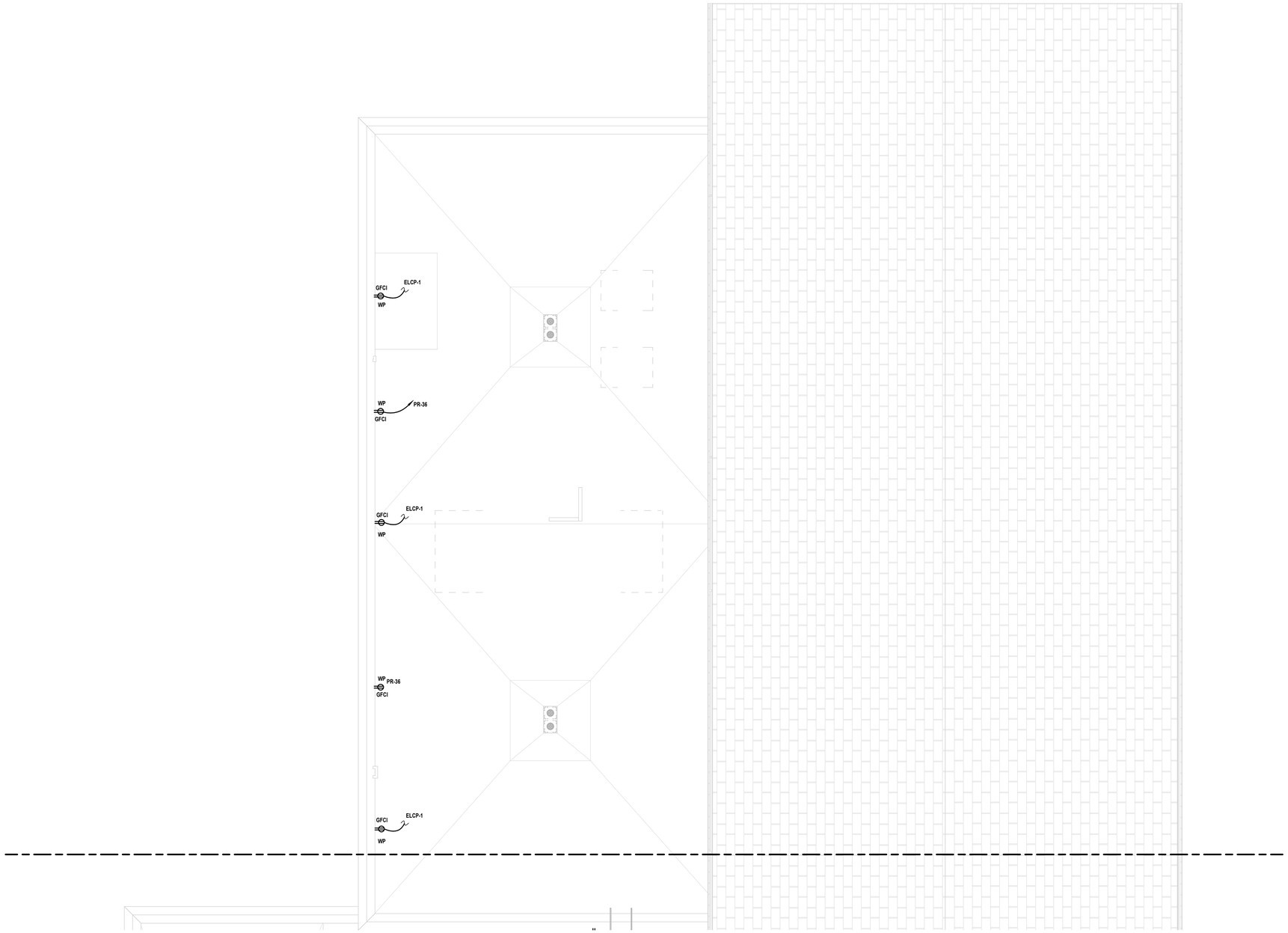

1 Partial Roof Electrical Power Plan
SCALE: 3/16" = 1'-0"

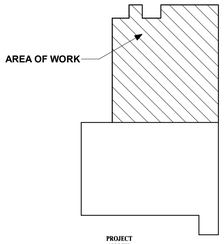

Key Plan

PROJECT NORTH

N

C:\Users\jposhi\Documents\VGFD2001-Central21-E_jposhi.rvt

7/15/2022 3:36:31 PM

H2M architects + engineers

538 Broad Hollow Road, 4th Floor East
Melville, NY 11747
631.756.8000 • www.h2m.com

CONSULTANTS:

MARK	DATE	DESCRIPTION

"ALTERATION OF THIS DOCUMENT EXCEPT BY A LICENSED PROFESSIONAL IS ILLEGAL"

DESIGNED BY:	DRAWN BY:	CHECKED BY:	REVIEWED BY:
SMP/CMP	SMP/CMP		

PROJECT No:	DATE:	SCALE:
VGFD2001	JULY 2022	AS SHOWN

CLIENT

VAILS GATE FIRE DISTRICT

New Storage Building (Phase I)
New Fire Station (Phase II)

872 Blooming Grove Turnpike
New Windsor, NY 12553

CONTRACT

CONTRACT G
GENERAL CONSTRUCTION

STATUS

REGULATORY REVIEW

SHEET TITLE

PARTIAL ROOF ELECTRICAL POWER PLAN
NEW FIRE STATION
PHASE 2

DRAWING No.

E2 103B.00

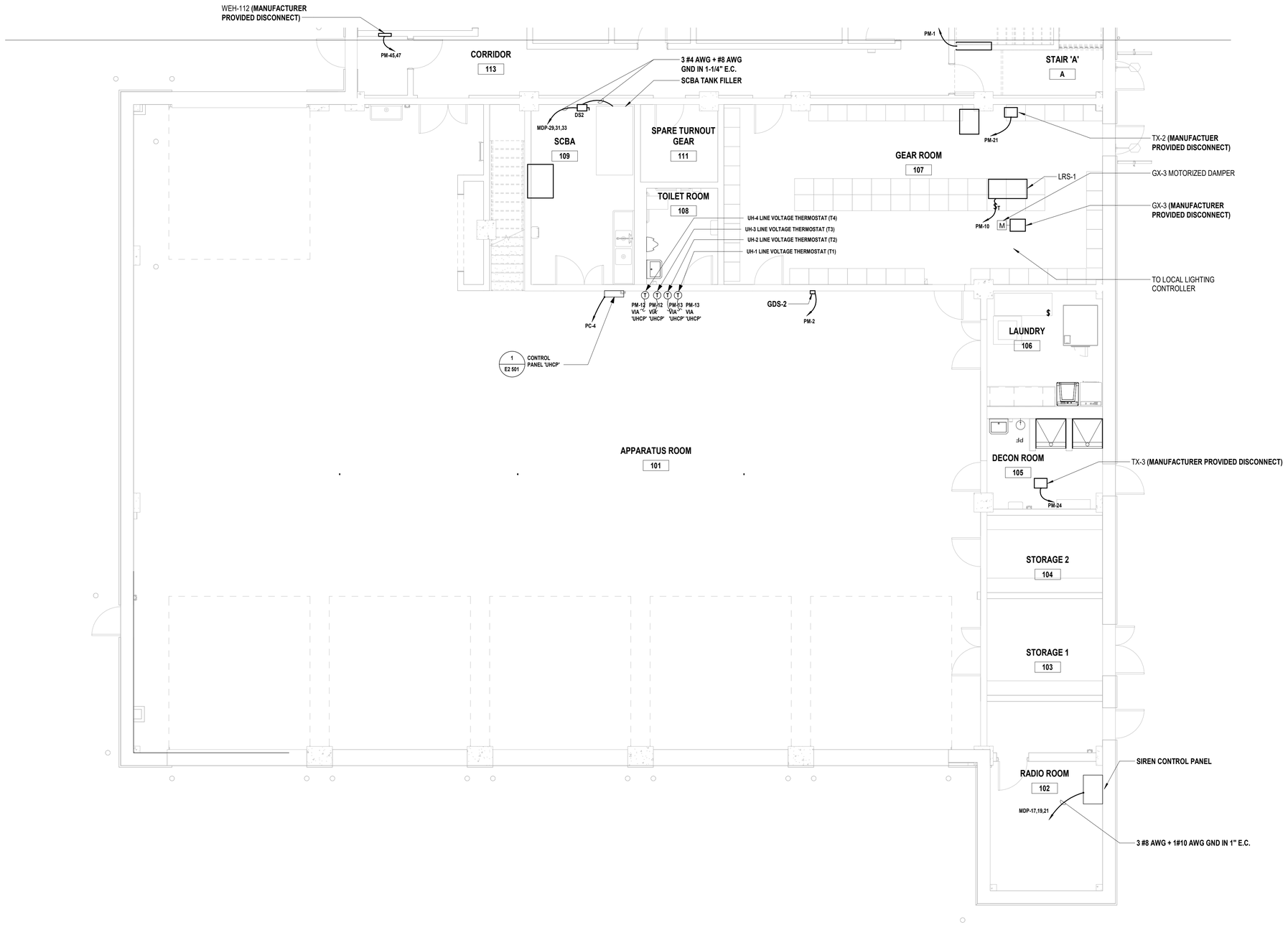

2 **Partial First Floor HVAC Power Plan**
SCALE: 3/16" = 1'-0"

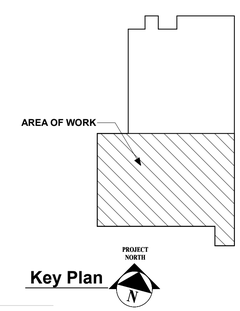

Key Plan

C:\Users\jposhi\Documents\VGFD2001-Central21-E_rjoshi.rvt

7/15/2022 3:36:32 PM

H2M architects + engineers

538 Broad Hollow Road, 4th Floor East
Melville, NY 11747
631.756.8000 • www.h2m.com

CONSULTANTS:

MARK	DATE	DESCRIPTION

STATE OF NEW YORK · ANTHONY WOONG-IN KIM · 092583 · LICENSED PROFESSIONAL ENGINEER

"ALTERATION OF THIS DOCUMENT EXCEPT BY A LICENSED PROFESSIONAL IS ILLEGAL"

DESIGNED BY:	DRAWN BY:	CHECKED BY:	REVIEWED BY:
SMP/CMP	SMP/CMP		

PROJECT No:	DATE:	SCALE:
VGFD2001	JULY 2022	AS SHOWN

CLIENT

VAILS GATE FIRE DISTRICT

New Storage Building (Phase I)
New Fire Station (Phase II)

872 Blooming Grove Turnpike
New Windsor, NY 12553

CONTRACT

CONTRACT G
GENERAL CONSTRUCTION

STATUS

REGULATORY REVIEW

SHEET TITLE

PARTIAL FIRST FLOOR HVAC POWER PLAN
NEW FIRE STATION
PHASE 2

DRAWING No.

E2 111A.00

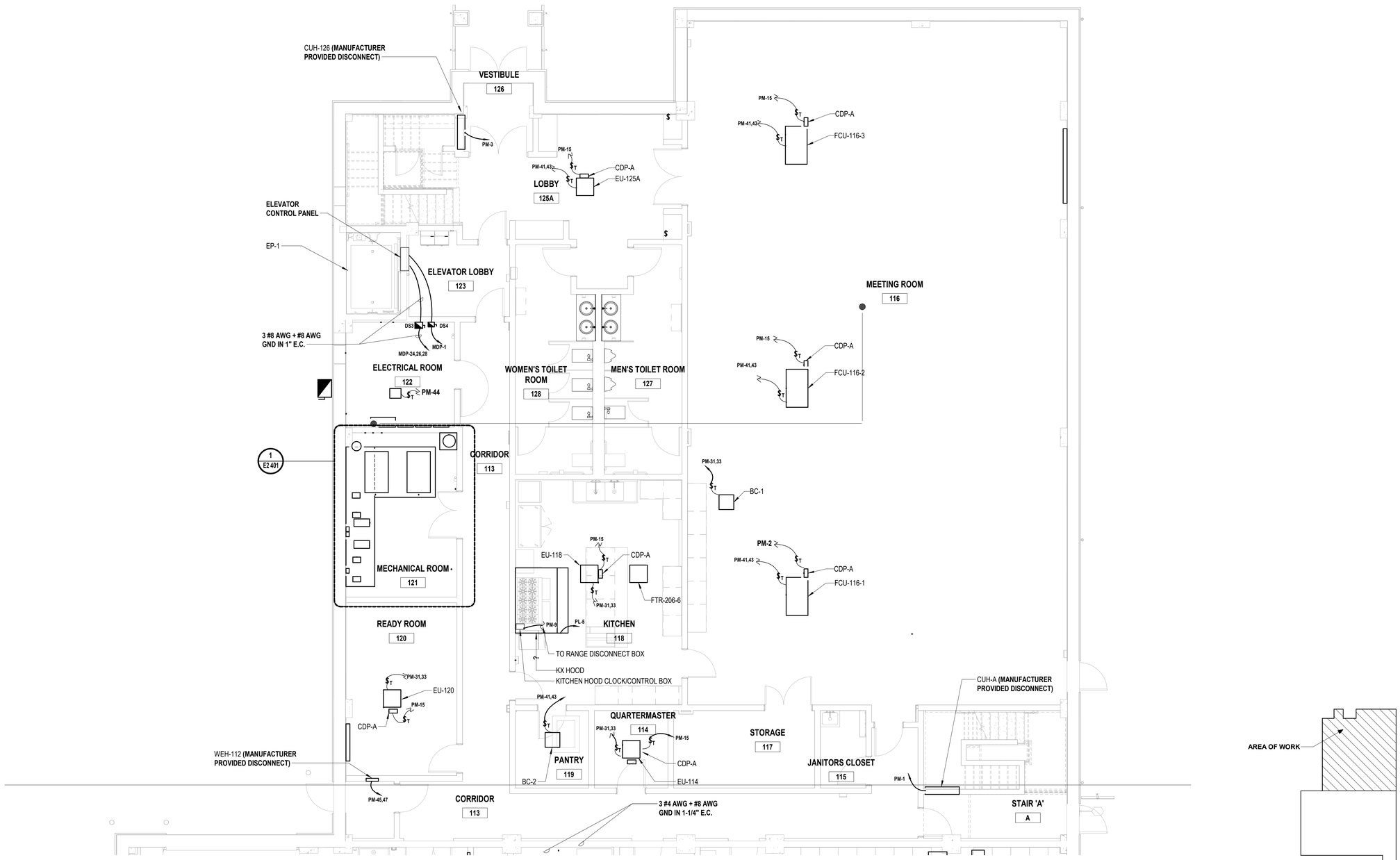

1 Electrical Partial First Floor HVAC Power Plan
SCALE: 3/16" = 1'-0"

Key Plan

PROJECT NORTH

H2M architects + engineers

538 Broad Hollow Road, 4th Floor East
Melville, NY 11747
631.756.8000 • www.h2m.com

CONSULTANTS:

MARK	DATE	DESCRIPTION

STATE OF NEW YORK
ANTHONY WOONG-WAH
LICENSED PROFESSIONAL ENGINEER
092583

"ALTERATION OF THIS DOCUMENT EXCEPT BY A LICENSED PROFESSIONAL IS ILLEGAL"

DESIGNED BY:	DRAWN BY:	CHECKED BY:	REVIEWED BY:
SMP/CMP	SMP/CMP		

PROJECT No:	DATE:	SCALE:
VGFD2001	JULY 2022	AS SHOWN

CLIENT
VAILS GATE FIRE DISTRICT

New Storage Building (Phase I)
New Fire Station (Phase II)

872 Blooming Grove Turnpike
New Windsor, NY 12553

CONTRACT
CONTRACT G
GENERAL CONSTRUCTION

STATUS
REGULATORY REVIEW

SHEET TITLE
PARTIAL FIRST FLOOR HVAC POWER PLAN
NEW FIRE STATION
PHASE 2

DRAWING No.
E2 111B.00

C:\Users\josh\Documents\VGFD2001-Central21-E_josh.rvt
7/15/2022 3:36:34 PM

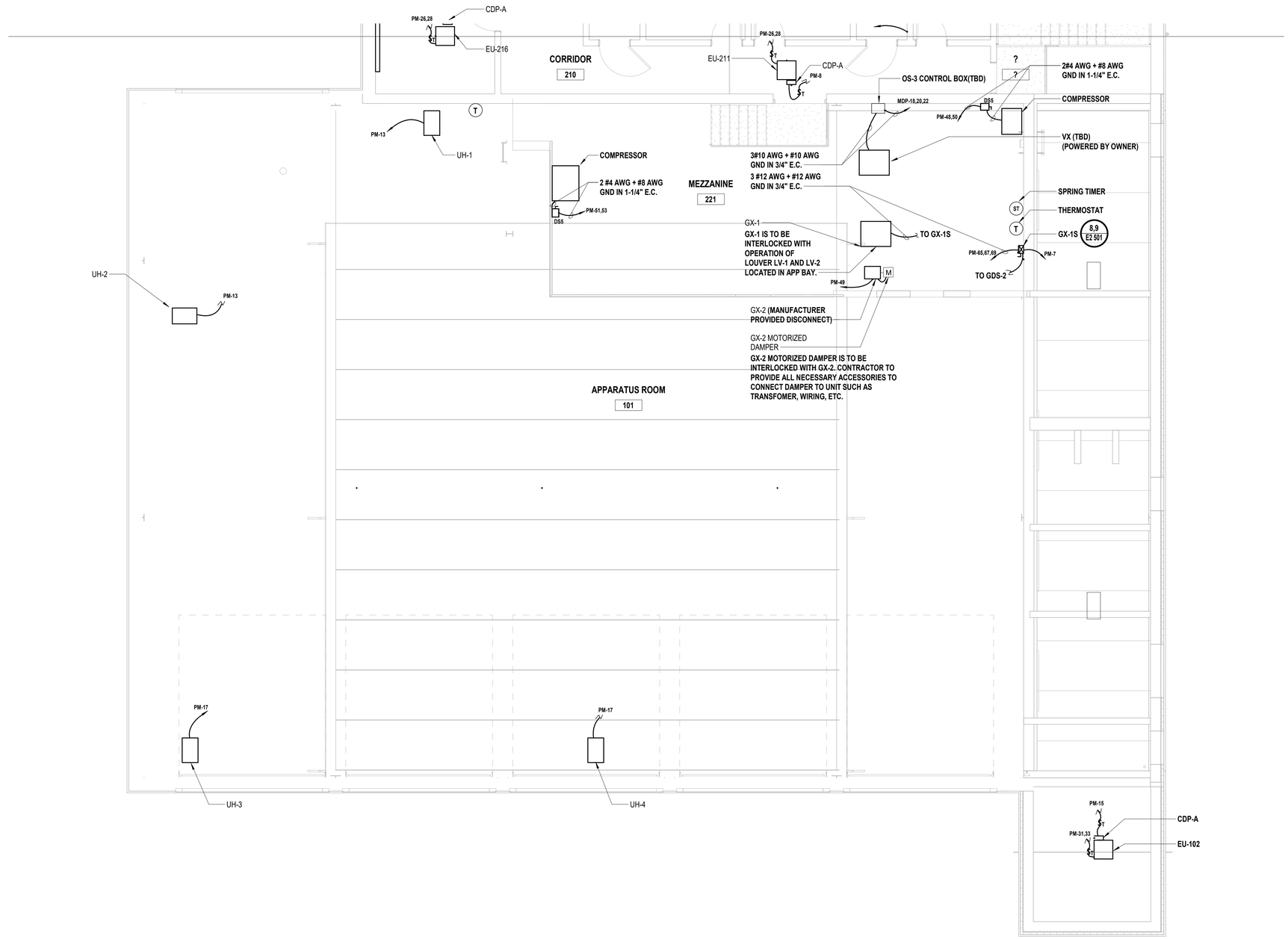

1 Electrical Partial Second / Mezzanine Floor HVAC Power Plan
SCALE: 3/16" = 1'-0"

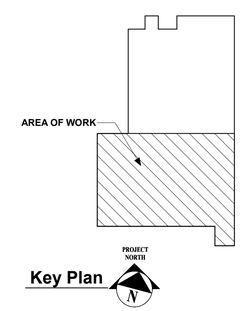

Key Plan

H2M architects + engineers
538 Broad Hollow Road, 4th Floor East
Melville, NY 11747
631.756.8000 • www.h2m.com

CONSULTANTS:

MARK	DATE	DESCRIPTION

STATE OF NEW YORK
ANTHONY WOONG-WAN
LICENSED PROFESSIONAL ENGINEER
092583

"ALTERATION OF THIS DOCUMENT EXCEPT BY A LICENSED PROFESSIONAL IS ILLEGAL."

DESIGNED BY:	DRAWN BY:	CHECKED BY:	REVIEWED BY:
SMP/CMP	SMP/CMP		

PROJECT No:	DATE:	SCALE:
VGFD2001	JULY 2022	AS SHOWN

CLIENT
VAILS GATE FIRE DISTRICT

New Storage Building (Phase I)
New Fire Station (Phase II)

872 Blooming Grove Turnpike
New Windsor, NY 12553

CONTRACT
CONTRACT G
GENERAL CONSTRUCTION

STATUS
REGULATORY REVIEW

SHEET TITLE
PARTIAL SECOND / MEZZANINE
FLOOR HVAC POWER PLAN
NEW FIRE STATION
PHASE 2

DRAWING No.
E2 112A.00

C:\Users\jjoshi\Documents\VGFD2001-Central21-E_rjoshi.rvt
7/15/2022 3:36:35 PM

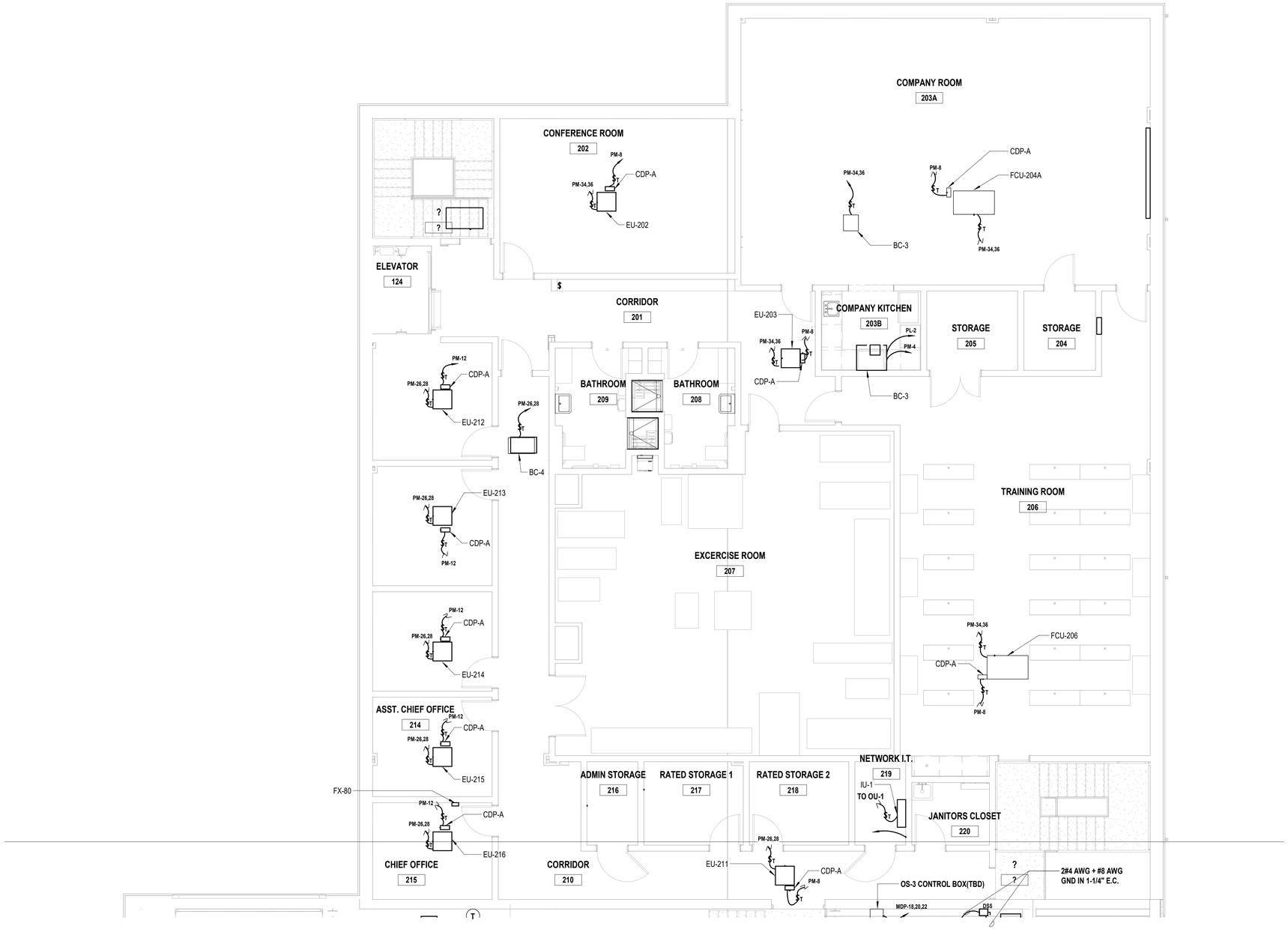

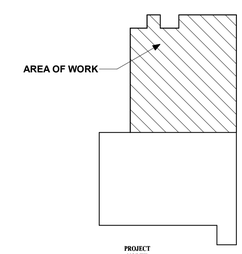

Key Plan

PROJECT NORTH

1 Electrical Partial Second Floor HVAC Power Plan

SCALE: 3/16" = 1'-0"

C:\Users\jpeshi\Documents\VGFD2001-Central21-E_jpeshi.rvt

7/15/2022 3:36:37 PM

H2M architects + engineers

538 Broad Hollow Road, 4th Floor East
Melville, NY 11747
631.756.8000 • www.h2m.com

CONSULTANTS:

MARK	DATE	DESCRIPTION

STATE OF NEW YORK
ANTHONY WOONG-IN KIM
LICENSED PROFESSIONAL ENGINEER
092583

"ALTERATION OF THIS DOCUMENT EXCEPT BY A LICENSED PROFESSIONAL IS ILLEGAL."

DESIGNED BY:	DRAWN BY:	CHECKED BY:	REVIEWED BY:
SMP/CMP	SMP/CMP		

PROJECT No:	DATE:	SCALE:
VGFD2001	JULY 2022	AS SHOWN

CLIENT

VAILS GATE FIRE DISTRICT

New Storage Building (Phase I)
New Fire Station (Phase II)

872 Blooming Grove Turnpike
New Windsor, NY 12553

CONTRACT

CONTRACT G
GENERAL CONSTRUCTION

STATUS

REGULATORY REVIEW

SHEET TITLE

PARTIAL SECOND FLOOR HVAC POWER PLAN
NEW FIRE STATION
PHASE 2

DRAWING No.

E2 112B.00

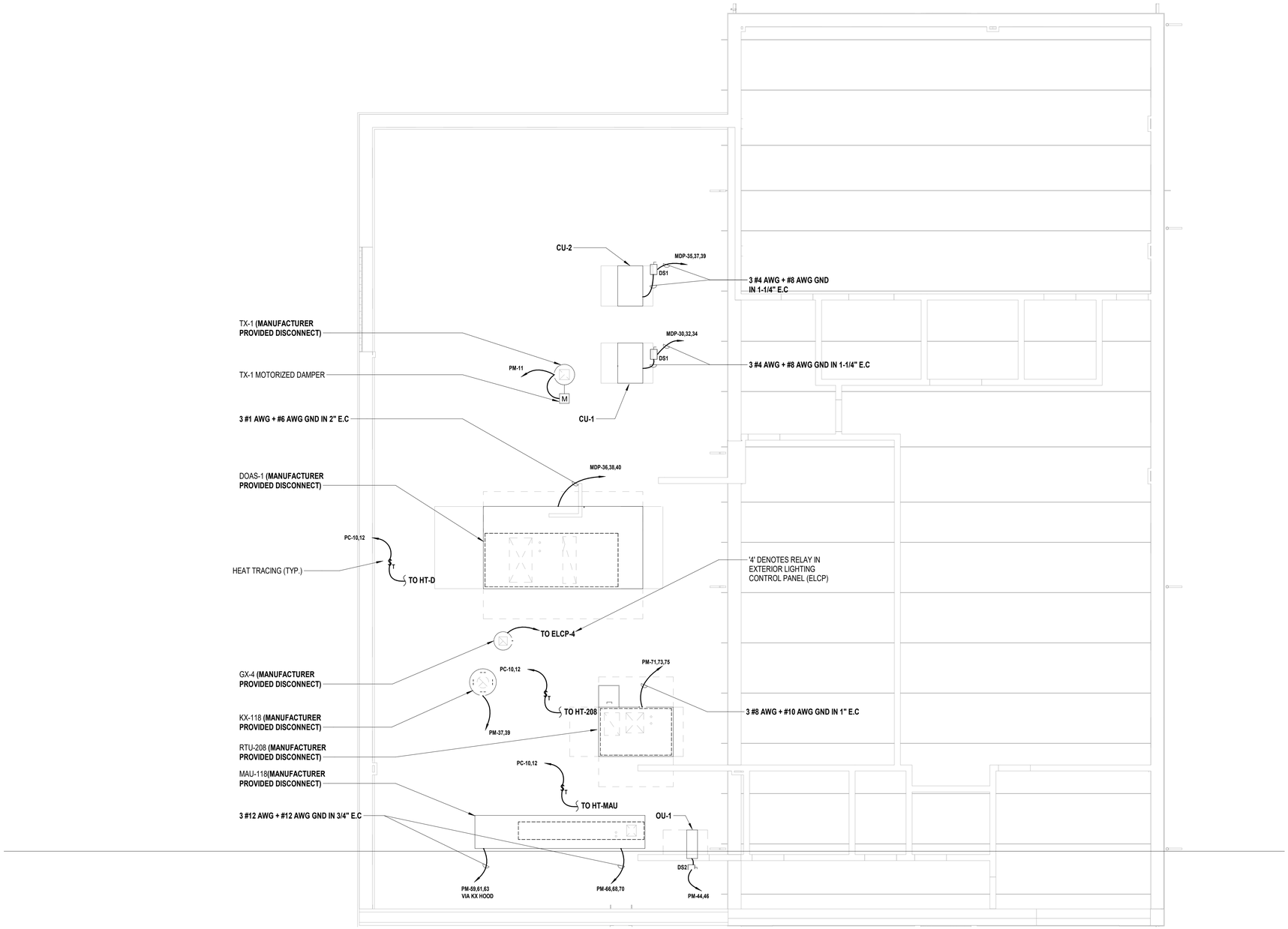

2 **Roof HVAC Power Plan**
SCALE: 3/16" = 1'-0"

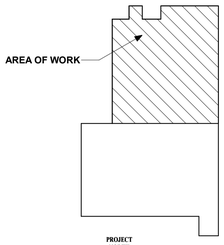

Key Plan

PROJECT NORTH

C:\Users\cpilegg\Documents\VGFD2001-Central21-E_CPilegg.rvt

7/18/2022 9:39:39 AM

H2M architects + engineers

538 Broad Hollow Road, 4th Floor East
Melville, NY 11747
631.756.8000 • www.h2m.com

CONSULTANTS:

MARK	DATE	DESCRIPTION

STATE OF NEW YORK · ANTHONY WOONG-UN KIM · 092583 · LICENSED PROFESSIONAL ENGINEER

"ALTERATION OF THIS DOCUMENT EXCEPT BY A LICENSED PROFESSIONAL IS ILLEGAL"

DESIGNED BY:	DRAWN BY:	CHECKED BY:	REVIEWED BY:
SMP/CMP	SMP/CMP		

PROJECT No:	DATE:	SCALE:
VGFD2001	JULY 2022	AS SHOWN

CLIENT

VAILS GATE FIRE DISTRICT

New Storage Building (Phase I)
New Fire Station (Phase II)

872 Blooming Grove Turnpike
New Windsor, NY 12553

CONTRACT

CONTRACT G
GENERAL CONSTRUCTION

STATUS

REGULATORY REVIEW

SHEET TITLE

ROOF HVAC POWER PLAN
NEW FIRE STATION
PHASE 2

DRAWING No.

E2 114B.00

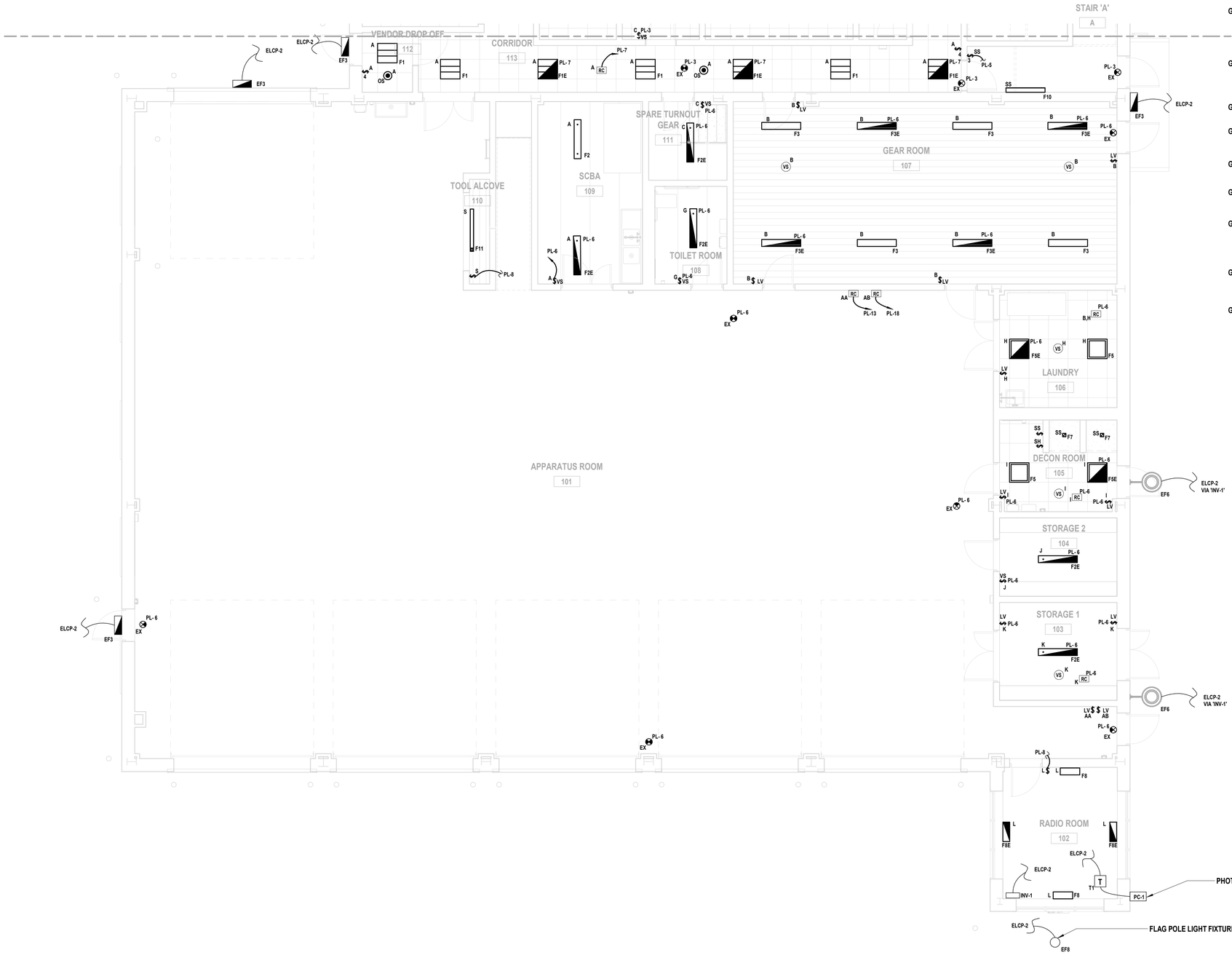

1 Electrical Partial First Floor Lighting Plan
SCALE: 3/16" = 1'-0"

LIGHTING GENERAL NOTES:

G1. PROVIDE ALL REQUIRED WIRING NECESSARY BETWEEN SWITCHES, CONTROLLERS AND/OR OCCUPANCY SENSORS FOR COMPLETE LIGHTING CONTROL. WHERE 3 OR 4 WAY SWITCHES ARE USED, PROVIDE ALL REQUIRED WIRING BETWEEN SWITCHES. WIRE SIZE SHALL EQUAL POWER FEED SIZE.

G2. CONTRACTORS SHALL LOCATE AND INSTALL ALL LIGHT FIXTURES IN MECHANICAL ROOMS, ELECTRICAL ROOMS, AND APPARATUS ROOMS TO PROVIDE CLEARANCE FROM ALL MECHANICAL EQUIPMENT. COORDINATE WITH MECHANICAL CONTRACTOR PRIOR TO INSTALLING FIXTURES, SWITCHES, CONDUIT, AND WIRING.

G3. FIXTURES INDICATED WITH CIRCUIT DESIGNATIONS SHALL BE CONNECTED TO LINE SIDE OF CIRCUIT.

G4. FIXTURES INDICATED WITH LETTER DESIGNATIONS SHALL BE CONNECTED TO THE SWITCH, OCCUPANCY/VACANCY SENSOR AND/OR POWER PACK WITH CORRESPONDING LETTER DESIGNATION.

G5. PROVIDE AND INSTALL A DEDICATED NEUTRAL FOR EACH CIRCUIT. CONTRACTOR IS NOT PERMITTED TO USE COMMON NEUTRALS.

G6. PROVIDE BOX AND ACCESSORIES AS PER MANUFACTURER'S RECOMMENDATION FOR ALL SWITCHES, SENSORS, AND/OR POWER PACKS.

G7. ALL CEILING MOUNTED FIXTURES WITH EMERGENCY DRIVERS SHALL BE LABELED. THESE LABELS SHALL BE EASILY READ FROM THE FLOOR LEVEL AND STATE THAT THE FIXTURE IS AN EMERGENCY FIXTURE AND CONTAIN THE PANEL NAME AND CIRCUIT NUMBER THAT IT IS FED FROM.

G8. WIRING FOR EMERGENCY DRIVER IS NOT SHOWN ON PLANS. FIXTURES WITH EMERGENCY DRIVERS SHALL BE PROVIDED WITH AN UNSWITCHED POWER FEED FROM CIRCUIT FEEDING LIGHT FIXTURE.

G9. CONTRACTOR SHALL USE SILICONE WATER PROOF SEALANT TO SEAL TOP, LEFT, AND RIGHT EDGES OF LIGHT FIXTURES TO WALL TO PREVENT MOISTURE FROM ACCUMULATING BEHING FIXTURE. BOTTOM EDGE SHALL BE LEFT UNSEALED FOR DRAINAGE. COLOR OF SILICONE SHALL MATCH EITHER WALL COLOR OR FIXTURE COLOR. (TYP. OF ALL EXTERIOR WALL MOUNTED FIXTURES).

LIGHTING KEY NOTES:
1. REFER TO EXTERIOR LIGHTING CONTROL PANEL RELAY SCHEDULE ON DRAWINGS E2 600

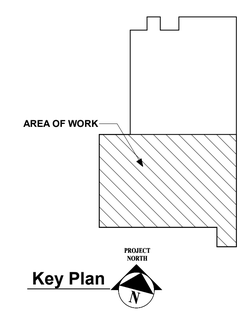

Key Plan

H2M architects + engineers
538 Broad Hollow Road, 4th Floor East
Melville, NY 11747
631.756.8000 • www.h2m.com

CONSULTANTS:

MARK	DATE	DESCRIPTION

STATE OF NEW YORK · ANTHONY WOONG-IN WAN · 092583 · LICENSED PROFESSIONAL ENGINEER

"ALTERATION OF THIS DOCUMENT EXCEPT BY A LICENSED PROFESSIONAL IS ILLEGAL"

DESIGNED BY:	DRAWN BY:	CHECKED BY:	REVIEWED BY:
SMP/CMP	SMP/CMP		

PROJECT No:	DATE:	SCALE:
VGFD2001	JULY 2022	AS SHOWN

CLIENT
VAILS GATE FIRE DISTRICT

New Storage Building (Phase I)
New Fire Station (Phase II)

872 Blooming Grove Turnpike
New Windsor, NY 12553

CONTRACT
CONTRACT G
GENERAL CONSTRUCTION

STATUS
REGULATORY REVIEW

SHEET TITLE
PARTIAL FIRST FLOOR ELECTRICAL LIGHTING PLAN
NEW FIRE STATION
PHASE 2

DRAWING No.
E2 121A.00

C:\Users\jposhi\Documents\VGFD2001-Central21-E_jposhi.rvt
7/15/2022 3:36:40 PM

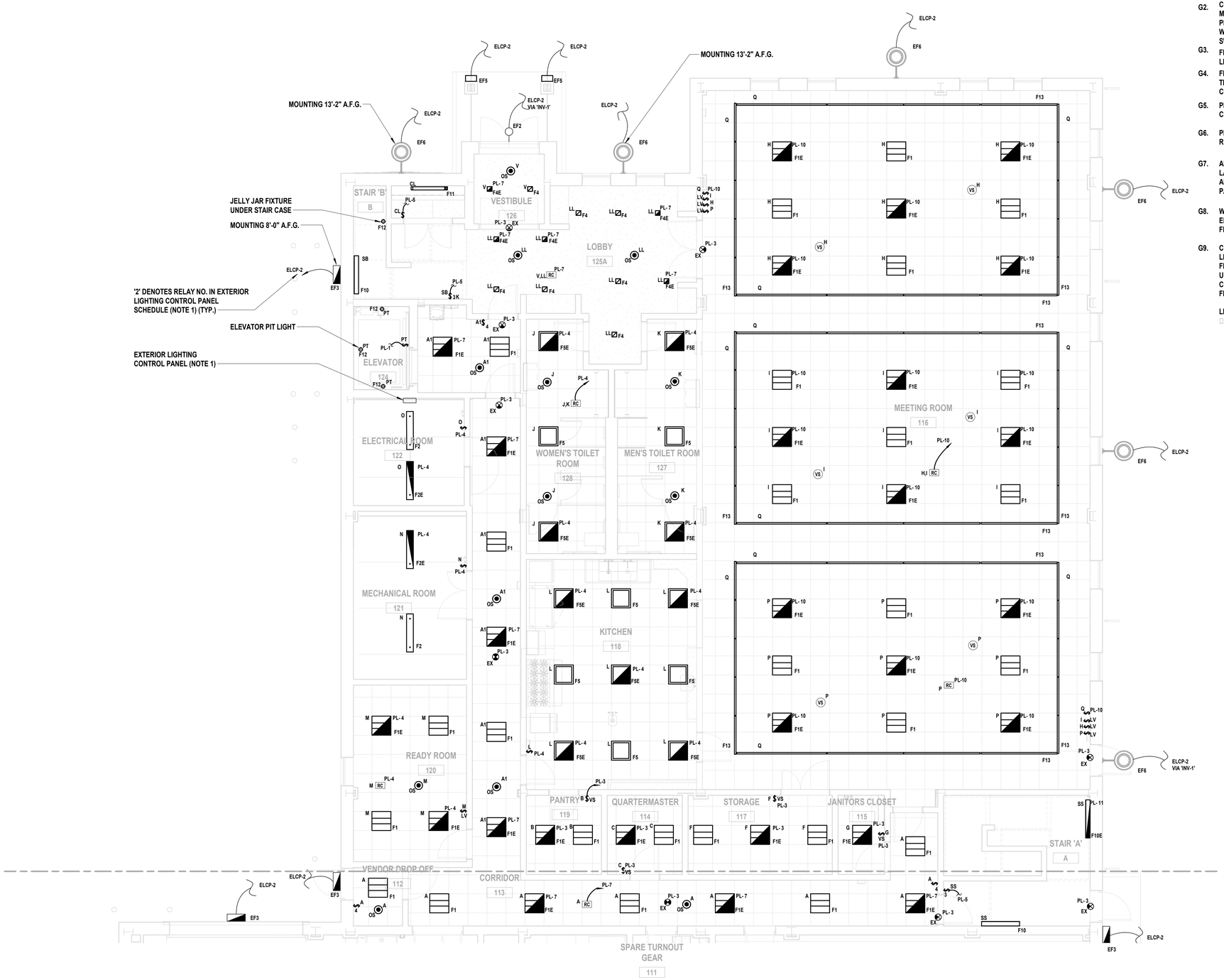

1 **Electrical Partial First Floor Lighting Plan**
SCALE: 3/16" = 1'-0"

LIGHTING GENERAL NOTES:

G1. PROVIDE ALL REQUIRED WIRING NECESSARY BETWEEN SWITCHES, CONTROLLERS AND/OR OCCUPANCY SENSORS FOR COMPLETE LIGHTING CONTROL. WHERE 3 OR 4 WAY SWITCHES ARE USED, PROVIDE ALL REQUIRED WIRING BETWEEN SWITCHES. WIRE SIZE SHALL EQUAL POWER FEED SIZE.

G2. CONTRACTORS SHALL LOCATE AND INSTALL ALL LIGHT FIXTURES IN MECHANICAL ROOMS, ELECTRICAL ROOMS, AND APPARATUS ROOMS TO PROVIDE CLEARANCE FROM ALL MECHANICAL EQUIPMENT. COORDINATE WITH MECHANICAL CONTRACTOR PRIOR TO INSTALLING FIXTURES, SWITCHES, CONDUIT, AND WIRING.

G3. FIXTURES INDICATED WITH CIRCUIT DESIGNATIONS SHALL BE CONNECTED TO LINE SIDE OF CIRCUIT.

G4. FIXTURES INDICATED WITH LETTER DESIGNATIONS SHALL BE CONNECTED TO THE SWITCH, OCCUPANCY/VACANCY SENSOR AND/OR POWER PACK WITH CORRESPONDING LETTER DESIGNATION.

G5. PROVIDE AND INSTALL A DEDICATED NEUTRAL FOR EACH CIRCUIT. CONTRACTOR IS NOT PERMITTED TO USE COMMON NEUTRALS.

G6. PROVIDE BOX AND ACCESSORIES AS PER MANUFACTURER'S RECOMMENDATION FOR ALL SWITCHES, SENSORS, AND/OR POWER PACKS.

G7. ALL CEILING MOUNTED FIXTURES WITH EMERGENCY DRIVERS SHALL BE LABELED. THESE LABELS SHALL BE EASILY READ FROM THE FLOOR LEVEL AND STATE THAT THE FIXTURE IS AN EMERGENCY FIXTURE AND CONTAIN THE PANEL NAME AND CIRCUIT NUMBER THAT IT IS FED FROM.

G8. WIRING FOR EMERGENCY DRIVER IS NOT SHOWN ON PLANS. FIXTURES WITH EMERGENCY DRIVERS SHALL BE PROVIDED WITH AN UNSWITCHED POWER FEED FROM CIRCUIT FEEDING LIGHT FIXTURE.

G9. CONTRACTOR SHALL USE SILICONE WATER PROOF SEALANT TO SEAL TOP, LEFT, AND RIGHT EDGES OF LIGHT FIXTURES TO WALL TO PREVENT MOISTURE FROM ACCUMULATING BEHING FIXTURE. BOTTOM EDGE SHALL BE LEFT UNSEALED FOR DRAINAGE. COLOR OF SILICONE SHALL MATCH EITHER WALL COLOR OR FIXTURE COLOR. (TYP. OF ALL EXTERIOR WALL MOUNTED FIXTURES).

LIGHTING KEY NOTES:
1. REFER TO EXTERIOR LIGHTING CONTROL PANEL RELAY SCHEDULE ON DRAWINGS E2 600

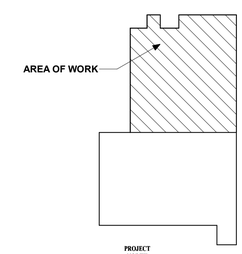

Key Plan

PROJECT NORTH

H2M architects + engineers
538 Broad Hollow Road, 4th Floor East
Melville, NY 11747
631.756.8000 • www.h2m.com

CONSULTANTS:

MARK	DATE	DESCRIPTION

STATE OF NEW YORK · ANTHONY WIGNAL · 094583 · LICENSED PROFESSIONAL ENGINEER

*ALTERATION OF THIS DOCUMENT EXCEPT BY A LICENSED PROFESSIONAL IS ILLEGAL.

DESIGNED BY:	DRAWN BY:	CHECKED BY:	REVIEWED BY:
SMP/CMP	SMP/CMP		

PROJECT No:	DATE:	SCALE:
VGFD2001	JULY 2022	AS SHOWN

CLIENT
VAILS GATE FIRE DISTRICT

New Storage Building (Phase I)
New Fire Station (Phase II)

872 Blooming Grove Turnpike
New Windsor, NY 12553

CONTRACT
CONTRACT G
GENERAL CONSTRUCTION

STATUS
REGULATORY REVIEW

SHEET TITLE
PARTIAL FIRST FLOOR ELECTRICAL LIGHTING PLAN
NEW FIRE STATION
PHASE 2

DRAWING No.
E2 121B.00

C:\Users\jpahl\Documents\VGFD2001-Central21-E_jpahl.rvt

7/15/2022 3:36:44 PM

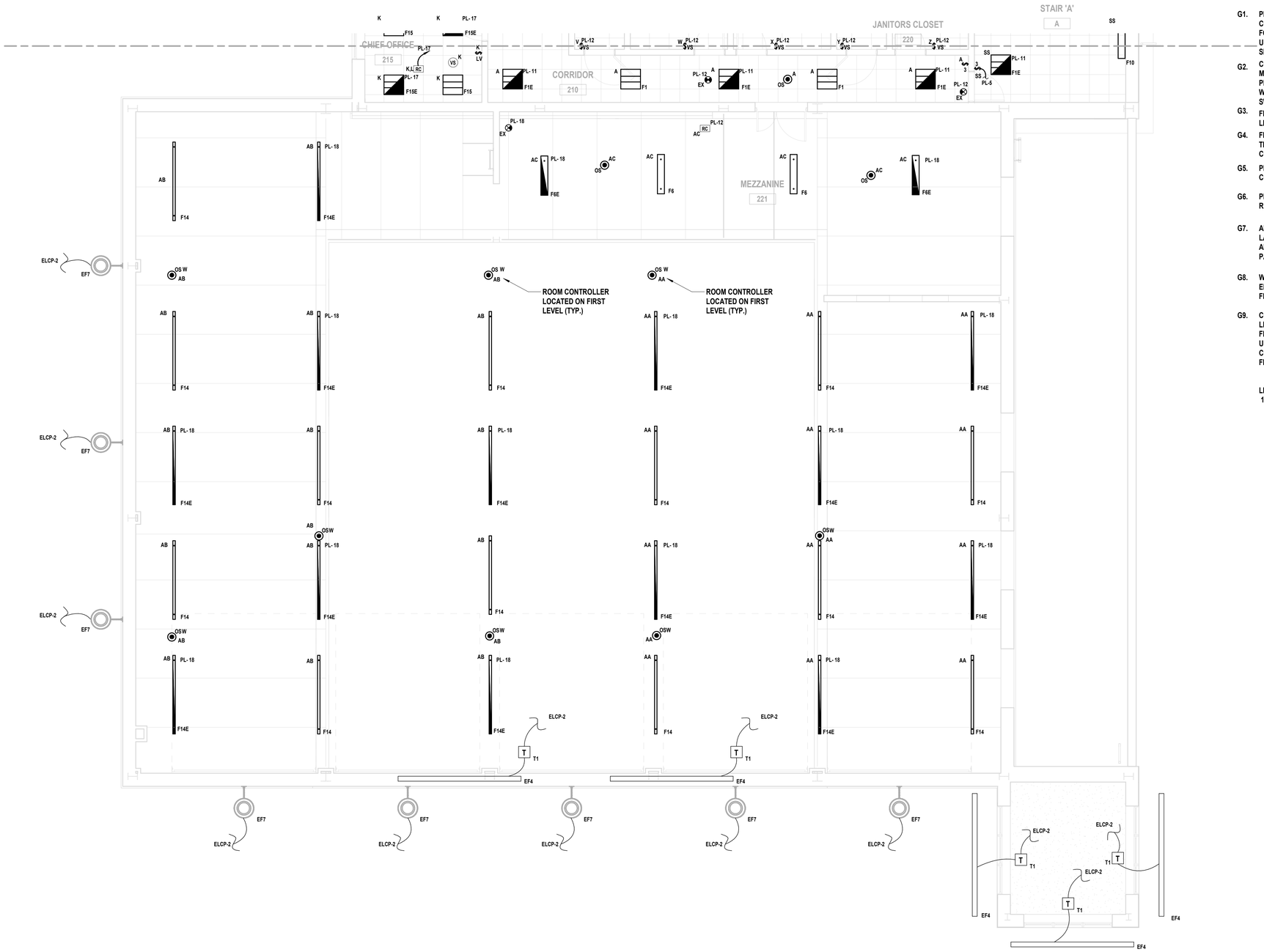

1 **Electrical Partial Second Floor Lighting Plan**
SCALE: 3/16" = 1'-0"

LIGHTING GENERAL NOTES:

G1. PROVIDE ALL REQUIRED WIRING NECESSARY BETWEEN SWITCHES, CONTROLLERS AND/OR OCCUPANCY SENSORS FOR COMPLETE LIGHTING CONTROL. WHERE 3 OR 4 WAY SWITCHES ARE USED, PROVIDE ALL REQUIRED WIRING BETWEEN SWITCHES. WIRE SIZE SHALL EQUAL POWER FEED SIZE.

G2. CONTRACTORS SHALL LOCATE AND INSTALL ALL LIGHT FIXTURES IN MECHANICAL ROOMS, ELECTRICAL ROOMS, AND APPARATUS ROOMS TO PROVIDE CLEARANCE FROM ALL MECHANICAL EQUIPMENT. COORDINATE WITH MECHANICAL CONTRACTOR PRIOR TO INSTALLING FIXTURES, SWITCHES, CONDUIT, AND WIRING.

G3. FIXTURES INDICATED WITH CIRCUIT DESIGNATIONS SHALL BE CONNECTED TO LINE SIDE OF CIRCUIT.

G4. FIXTURES INDICATED WITH LETTER DESIGNATIONS SHALL BE CONNECTED TO THE SWITCH, OCCUPANCY/VACANCY SENSOR AND/OR POWER PACK WITH CORRESPONDING LETTER DESIGNATION.

G5. PROVIDE AND INSTALL A DEDICATED NEUTRAL FOR EACH CIRCUIT. CONTRACTOR IS NOT PERMITTED TO USE COMMON NEUTRALS.

G6. PROVIDE BOX AND ACCESSORIES AS PER MANUFACTURER'S RECOMMENDATION FOR ALL SWITCHES, SENSORS, AND/OR POWER PACKS.

G7. ALL CEILING MOUNTED FIXTURES WITH EMERGENCY DRIVERS SHALL BE LABELED. THESE LABELS SHALL BE EASILY READ FROM THE FLOOR LEVEL AND STATE THAT THE FIXTURE IS AN EMERGENCY FIXTURE AND CONTAIN THE PANEL NAME AND CIRCUIT NUMBER THAT IT IS FED FROM.

G8. WIRING FOR EMERGENCY DRIVER IS NOT SHOWN ON PLANS. FIXTURES WITH EMERGENCY DRIVERS SHALL BE PROVIDED WITH AN UNSWITCHED POWER FEED FROM CIRCUIT FEEDING LIGHT FIXTURE.

G9. CONTRACTOR SHALL USE SILICONE WATER PROOF SEALANT TO SEAL TOP, LEFT, AND RIGHT EDGES OF LIGHT FIXTURES TO WALL TO PREVENT MOISTURE FROM ACCUMULATING BEHING FIXTURE. BOTTOM EDGE SHALL BE LEFT UNSEALED FOR DRAINAGE. COLOR OF SILICONE SHALL MATCH EITHER WALL COLOR OR FIXTURE COLOR. (TYP. OF ALL EXTERIOR WALL MOUNTED FIXTURES).

LIGHTING KEY NOTES:
1. REFER TO EXTERIOR LIGHTING CONTROL PANEL RELAY SCHEDULE ON DRAWINGS E2 600

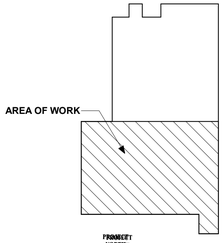

Key Plan

H2M architects + engineers
538 Broad Hollow Road, 4th Floor East
Melville, NY 11747
631.756.8000 • www.h2m.com

CONSULTANTS:

MARK	DATE	DESCRIPTION

STATE OF NEW YORK · ANTHONY WOODS-IW · 092583 · LICENSED PROFESSIONAL ENGINEER

"ALTERATION OF THIS DOCUMENT EXCEPT BY A LICENSED PROFESSIONAL IS ILLEGAL."

DESIGNED BY:	DRAWN BY:	CHECKED BY:	REVIEWED BY:
SMP/CMP	SMP/CMP		
PROJECT No:	DATE:	SCALE:	
VGFD2001	JULY 2022	AS SHOWN	

CLIENT
VAILS GATE FIRE DISTRICT

New Storage Building (Phase I)
New Fire Station (Phase II)

872 Blooming Grove Turnpike
New Windsor, NY 12553

CONTRACT
CONTRACT G
GENERAL CONSTRUCTION

STATUS
REGULATORY REVIEW

SHEET TITLE
PARTIAL SECOND / MEZZANINE FLOOR ELECTRICAL LIGHTING PLAN
NEW FIRE STATION
PHASE 2

DRAWING No.
E2 122A.00

C:\Users\jjoshi\Documents\VGFD2001-Central21-E_jjoshi.rvt
7/15/2022 3:36:48 PM

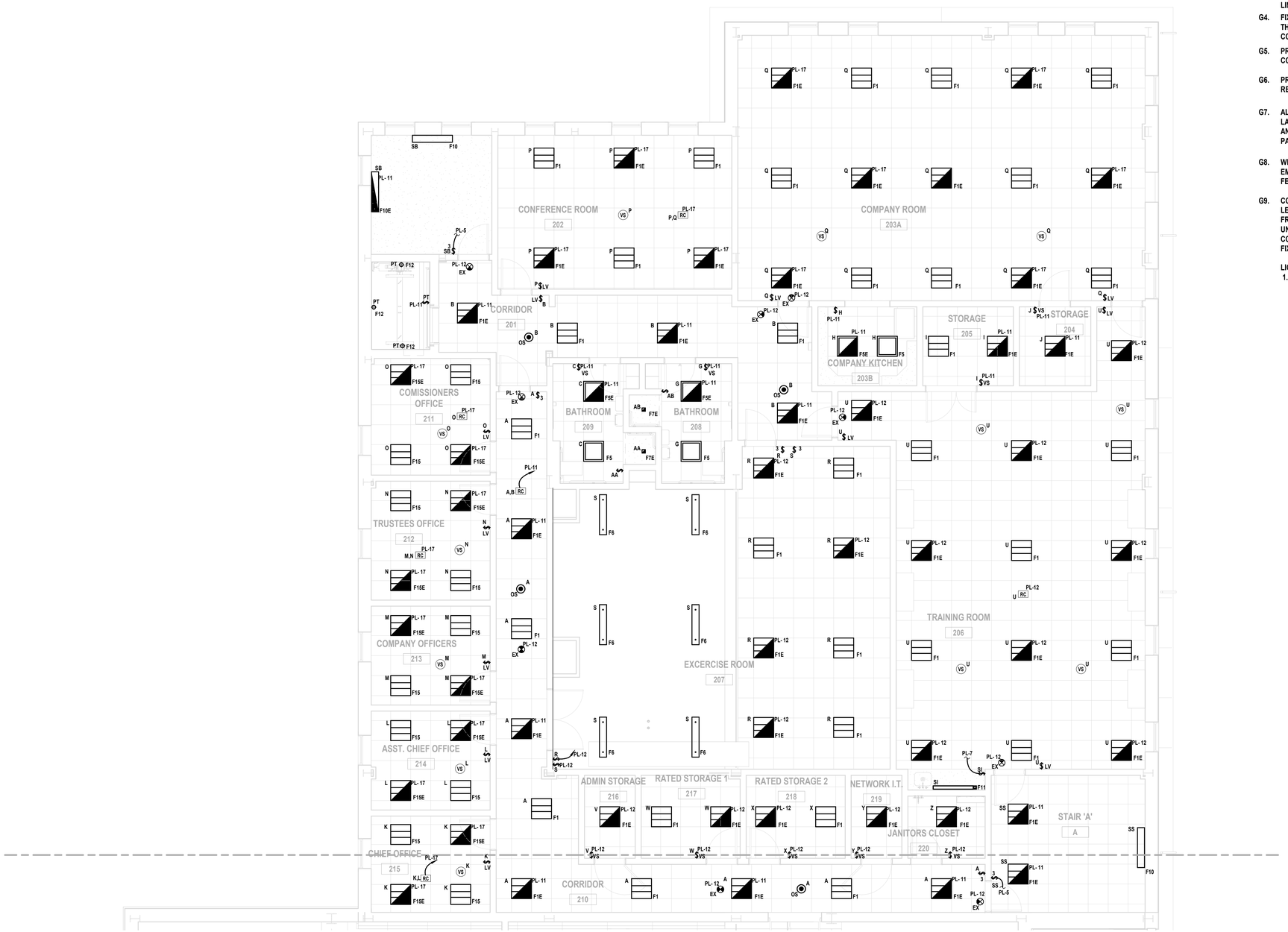

1 **Electrical Partial Second Floor Lighting Plan**
SCALE: 3/16" = 1'-0"

LIGHTING GENERAL NOTES:

G1. PROVIDE ALL REQUIRED WIRING NECESSARY BETWEEN SWITCHES, CONTROLLERS AND/OR OCCUPANCY SENSORS FOR COMPLETE LIGHTING CONTROL. WHERE 3 OR 4 WAY SWITCHES ARE USED, PROVIDE ALL REQUIRED WIRING BETWEEN SWITCHES. WIRE SIZE SHALL EQUAL POWER FEED SIZE.

G2. CONTRACTORS SHALL LOCATE AND INSTALL ALL LIGHT FIXTURES IN MECHANICAL ROOMS, ELECTRICAL ROOMS, AND APPARATUS ROOMS TO PROVIDE CLEARANCE FROM ALL MECHANICAL EQUIPMENT. COORDINATE WITH MECHANICAL CONTRACTOR PRIOR TO INSTALLING FIXTURES, SWITCHES, CONDUIT, AND WIRING.

G3. FIXTURES INDICATED WITH CIRCUIT DESIGNATIONS SHALL BE CONNECTED TO LINE SIDE OF CIRCUIT.

G4. FIXTURES INDICATED WITH LETTER DESIGNATIONS SHALL BE CONNECTED TO THE SWITCH, OCCUPANCY/VACANCY SENSOR AND/OR POWER PACK WITH CORRESPONDING LETTER DESIGNATION.

G5. PROVIDE AND INSTALL A DEDICATED NEUTRAL FOR EACH CIRCUIT. CONTRACTOR IS NOT PERMITTED TO USE COMMON NEUTRALS.

G6. PROVIDE BOX AND ACCESSORIES AS PER MANUFACTURER'S RECOMMENDATION FOR ALL SWITCHES, SENSORS, AND/OR POWER PACKS.

G7. ALL CEILING MOUNTED FIXTURES WITH EMERGENCY DRIVERS SHALL BE LABELED. THESE LABELS SHALL BE EASILY READ FROM THE FLOOR LEVEL AND STATE THAT THE FIXTURE IS AN EMERGENCY FIXTURE AND CONTAIN THE PANEL NAME AND CIRCUIT NUMBER THAT IT IS FED FROM.

G8. WIRING FOR EMERGENCY DRIVER IS NOT SHOWN ON PLANS. FIXTURES WITH EMERGENCY DRIVERS SHALL BE PROVIDED WITH AN UNSWITCHED POWER FEED FROM CIRCUIT FEEDING LIGHT FIXTURE.

G9. CONTRACTOR SHALL USE SILICONE WATER PROOF SEALANT TO SEAL TOP, LEFT, AND RIGHT EDGES OF LIGHT FIXTURES TO WALL TO PREVENT MOISTURE FROM ACCUMULATING BEHING FIXTURE. BOTTOM EDGE SHALL BE LEFT UNSEALED FOR DRAINAGE. COLOR OF SILICONE SHALL MATCH EITHER WALL COLOR OR FIXTURE COLOR. (TYP. OF ALL EXTERIOR WALL MOUNTED FIXTURES).

LIGHTING KEY NOTES:
1. REFER TO EXTERIOR LIGHTING CONTROL PANEL RELAY SCHEDULE ON DRAWINGS E2 600

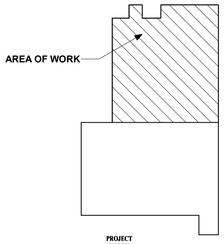

Key Plan

PROJECT NORTH

H2M architects + engineers
538 Broad Hollow Road, 4th Floor East
Melville, NY 11747
631.756.8000 • www.h2m.com

CONSULTANTS:

MARK	DATE	DESCRIPTION

STATE OF NEW YORK · ANTHONY WOONG-IN WAN · LICENSED PROFESSIONAL ENGINEER · 092583

"ALTERATION OF THIS DOCUMENT EXCEPT BY A LICENSED PROFESSIONAL IS ILLEGAL."

DESIGNED BY:	DRAWN BY:	CHECKED BY:	REVIEWED BY:
SMP/CMP	SMP/CMP		

PROJECT No:	DATE:	SCALE:
VGFD2001	JULY 2022	AS SHOWN

CLIENT
VAILS GATE FIRE DISTRICT

New Storage Building (Phase I)
New Fire Station (Phase II)

872 Blooming Grove Turnpike
New Windsor, NY 12553

CONTRACT
CONTRACT G
GENERAL CONSTRUCTION

STATUS
REGULATORY REVIEW

SHEET TITLE
PARTIAL SECOND FLOOR ELECTRICAL LIGHTING PLAN NEW FIRE STATION PHASE 2

DRAWING No.
E2 122B.00

C:\Users\jposhi\Documents\VGFD2001-Central21-E_jposhi.rvt
7/15/2022 3:36:51 PM

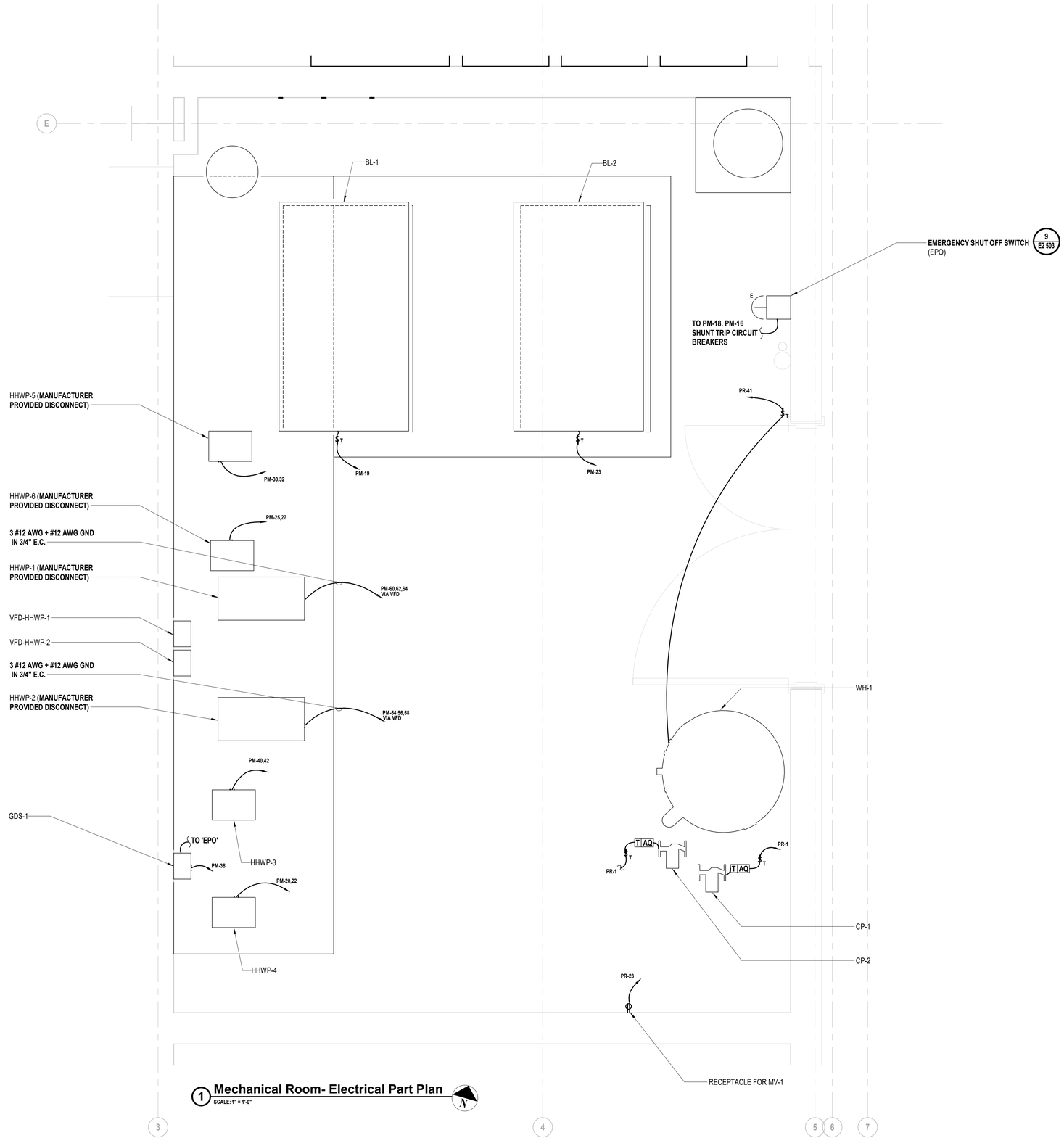

1 Mechanical Room- Electrical Part Plan
SCALE: 1" = 1'-0"

H2M architects + engineers

538 Broad Hollow Road, 4th Floor East
Melville, NY 11747
631.756.8000 • www.h2m.com

CONSULTANTS:

MARK	DATE	DESCRIPTION

STATE OF NEW YORK
ANTHONY WOONG-IN KIM
LICENSED PROFESSIONAL ENGINEER
092583

"ALTERATION OF THIS DOCUMENT EXCEPT BY A LICENSED PROFESSIONAL IS ILLEGAL"

DESIGNED BY:	DRAWN BY:	CHECKED BY:	REVIEWED BY:
Designer	Author		

PROJECT No:	DATE:	SCALE:
VGFD2001	JULY 2022	AS SHOWN

CLIENT

VAILS GATE FIRE DISTRICT

New Storage Building (Phase I)
New Fire Station (Phase II)

872 Blooming Grove Turnpike
New Windsor, NY 12553

CONTRACT

CONTRACT G
GENERAL CONSTRUCTION

STATUS

REGULATORY REVIEW

SHEET TITLE

ELECTRICAL ENLARGE PLANS
NEW FIRE STATION
PHASE 2

DRAWING No.

E2 401.00

C:\Users\jposhi\Documents\VGFD2001-Central21-E_jposhi.rvt

7/15/2022 3:36:52 PM

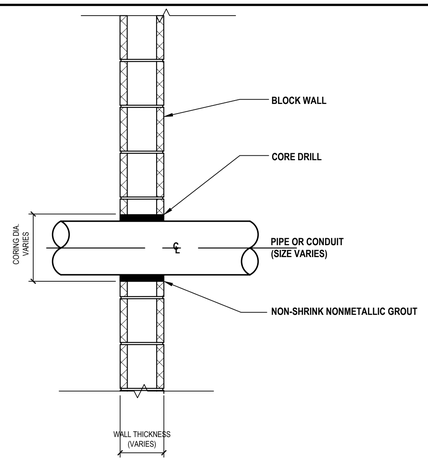

1 Typical Penetration Through Block Wall
SCALE: NTS

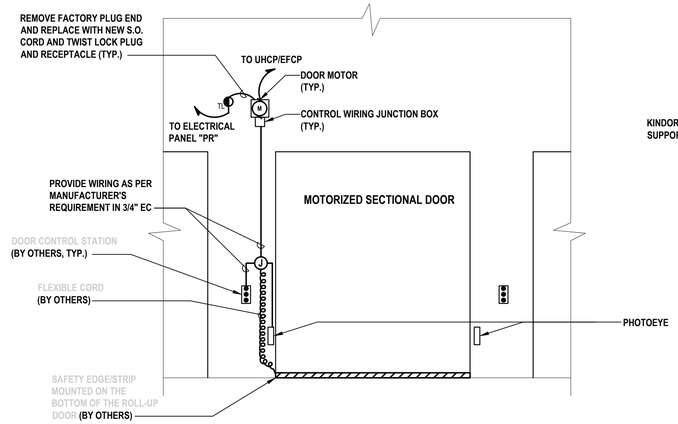

2 Garage Door Control - Elevation Plan
SCALE: NTS

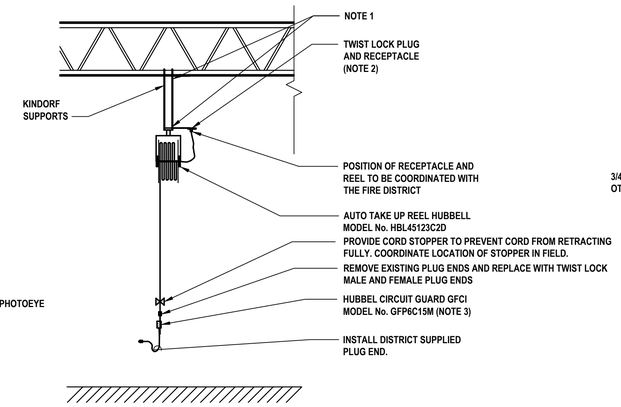

3 Charge Reel Receptacle Detail
SCALE: NTS

NOTES:

1. CONTRACTOR SHALL PROVIDE AND INSTALL ALL MOUNTING HARDWARE AND ACCESSORIES AS REQUIRED TO MOUNT CORD REEL TO CEILING.
2. CONTRACTOR SHALL COORDINATE FINAL MOUNTING LOCATION WITH DISTRICT.
3. COORDINATE FINAL PLUG END WIT DISTRICT/ OWNER IN FIELD.

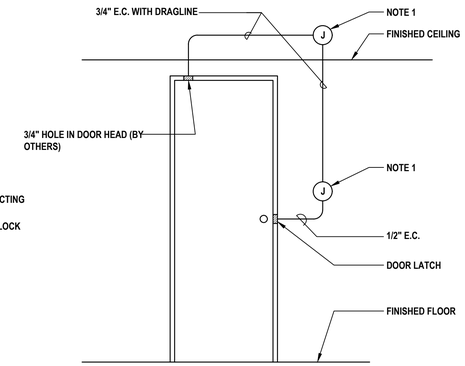

4 Security System Conduit Detail (Single Door)
SCALE: NTS

NOTES:

1. CONTRACTOR SHALL INSTALL JUNCTION BOX SUPPLIED BY OTHERS.
2. COORDINATE INSTALLATION AND EXACT MOUNTING HEIGHT AND LOCATION WITH ARCHITECT/ENGINEER IN FIELD.

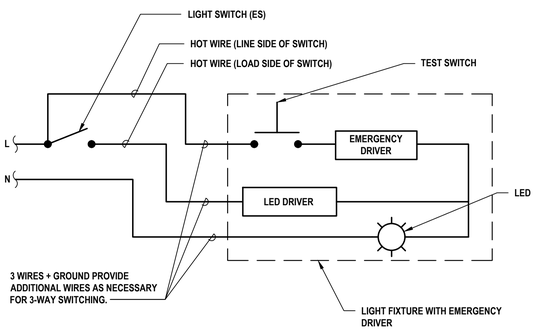

5 Typical Detail of Light Fixture with Emergency Driver
SCALE: NTS

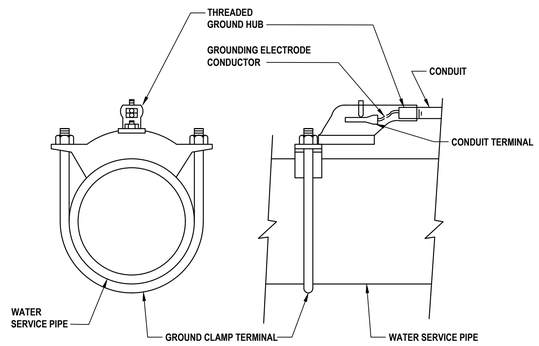

6 Water Pipe Electrode Connection
SCALE: NTS

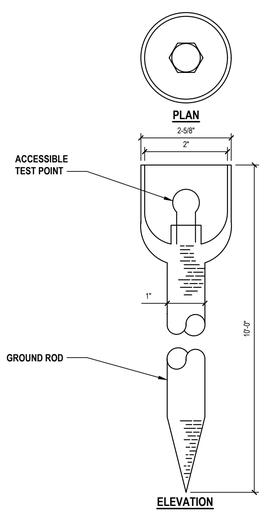

7 Accessible Ground Rod
SCALE: NTS

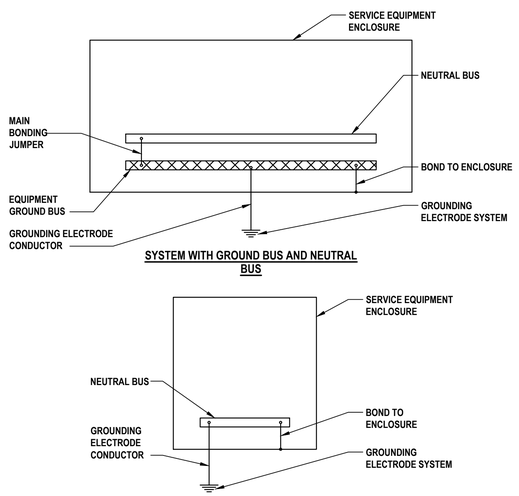

8 Basic System Grounding
SCALE: NTS

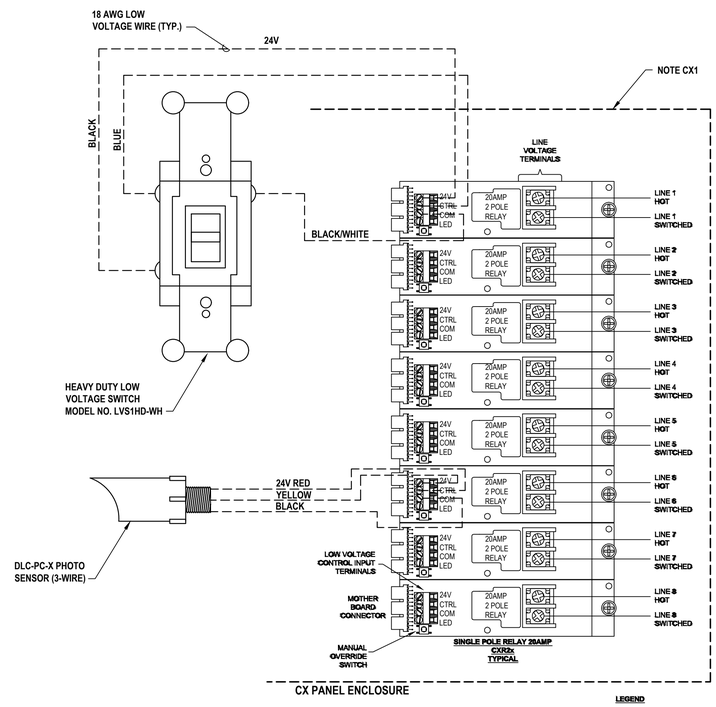

9 EXTERIOR LIGHTING CONTROL PANEL
SCALE: NTS

CX NOTES:

CX1. DETAIL ONLY SHOWS RELAYS FOR SCHEMATIC PURPOSES. EXACT NUMBER OF RELAYS SHALL BE BASED OFF OF PRODUCT MODEL NUMBER UNDER LIGHTING CONTROLS SCHEDULE.

H2M architects + engineers
538 Broad Hollow Road, 4th Floor East
Melville, NY 11747
631.756.8000 • www.h2m.com

CONSULTANTS:

MARK	DATE	DESCRIPTION

"ALTERATION OF THIS DOCUMENT EXCEPT BY A LICENSED PROFESSIONAL IS ILLEGAL"

DESIGNED BY:	DRAWN BY:	CHECKED BY:	REVIEWED BY:
SMP/CMP	SMP/CMP	AWK	AWK
PROJECT No.: VGFD2001	DATE: JULY 2022	SCALE: AS SHOWN	

CLIENT
VAILS GATE FIRE DISTRICT

New Storage Building (Phase I)
New Fire Station (Phase II)

872 Blooming Grove Turnpike
New Windsor, NY 12553

CONTRACT
CONTRACT G
GENERAL CONSTRUCTION

STATUS
FINAL BID DOCUMENT

SHEET TITLE
MAIN FIRE HOUSE ELECTRICAL DETAILS PHASE 2

DRAWING No.
E2 500.00

C:\Users\cpilagg\appdata\local\temp\AcPublish_34640\E-500.00 - Electrical Details (FA House).dwg Last Modified: Jul 15, 2022 - 2:10pm Plotted on: Aug 01, 2022 - 8:55am By (CPilagg)

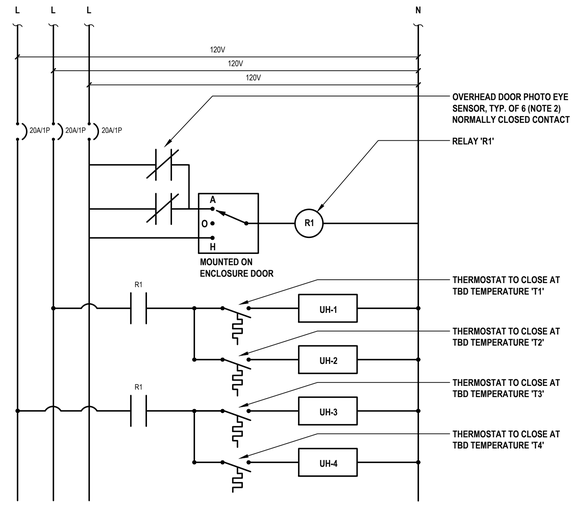

1 Apparatus Bay UH Control Panel 'UHCP' Schematic

SCALE: NTS

NOTES:

1. CONTRACTOR SHALL PROVIDE ALL REQUIRED RELAYS, CONTACTORS, CONTROL TRANSFORMERS, FUSES, HARDWARE, AND ACCESSORIES REQUIRED FOR COMPLETE CONTROL SYSTEM IN NEMA 1 ENCLOSURE.
2. MOUNT PHOTO EYE SO THAT WHEN ANY OVERHEAD DOOR IS IN THE RAISED POSITION THE CONTACT INDICATED OPENS AND THE HEATERS ARE PREVENTED FROM RUNNING. PROVIDE ADDITIONAL DEVICES AND ACCESSORIES AS REQUIRED.

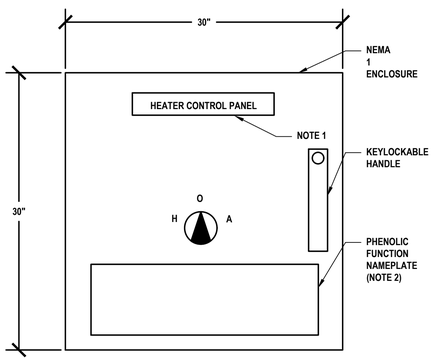

3 UHCP STD ELEVATION

SCALE: NTS

NOTES:

1. FOR 'UHCP' LABEL SHALL READ "HEATER CONTROL PANEL".
2. PHENOLIC NAMEPLATE:
   FOR UHCP: HEATERS SHALL BE SHUT OFF AND PREVENT FROM RUNNING WHEN APPARATUS OVERHEAD DOORS ARE IN OPEN POSITION.

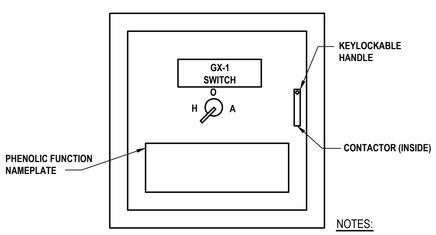

9 GX-1S Panel

SCALE:NTS

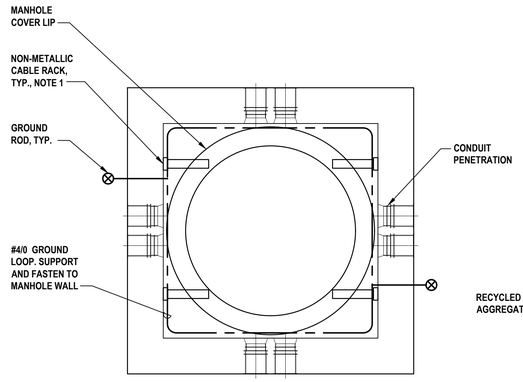

2 Electrical Manhole - Plan View

SCALE:NTS

NOTES:

1. NUMBER OF CABLE RACKS SHOWN IS FOR REFERENCE ONLY. ACTUAL NUMBER OF RACKS MAY VARY PER MANHOLE.

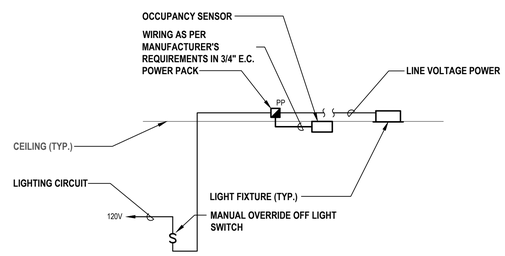

5 Typical Detail of Light Fixture with Occupancy Control Sensor

SCALE:NTS

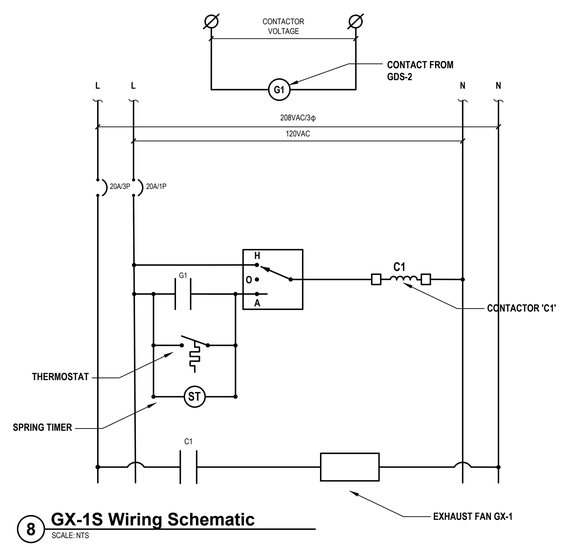

8 GX-1S Wiring Schematic

SCALE:NTS

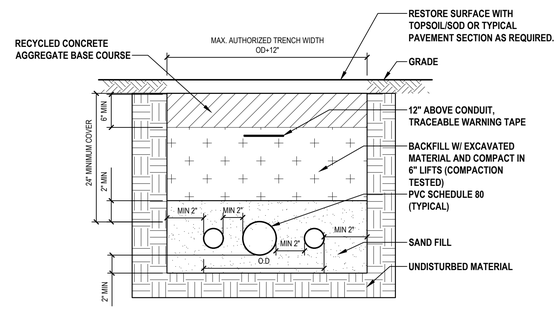

4 Typical Conduit Trench Detail

SCALE:NTS

NOTE:

1. MINIMIZE ALL TRENCH WIDTHS IN ORDER TO AVOID EXCESSIVE DISTURBANCE OF ADJACENT AREAS. TRENCH WALLS SHALL BE VERTICAL. USE SHEET PILING OR A SHEETING BOX TO MAINTAIN THE SPECIFIED TRENCH.

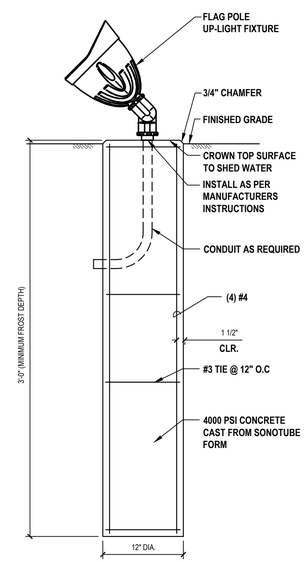

7 Flag Pole Up-Light Base Detail

SCALE:NTS

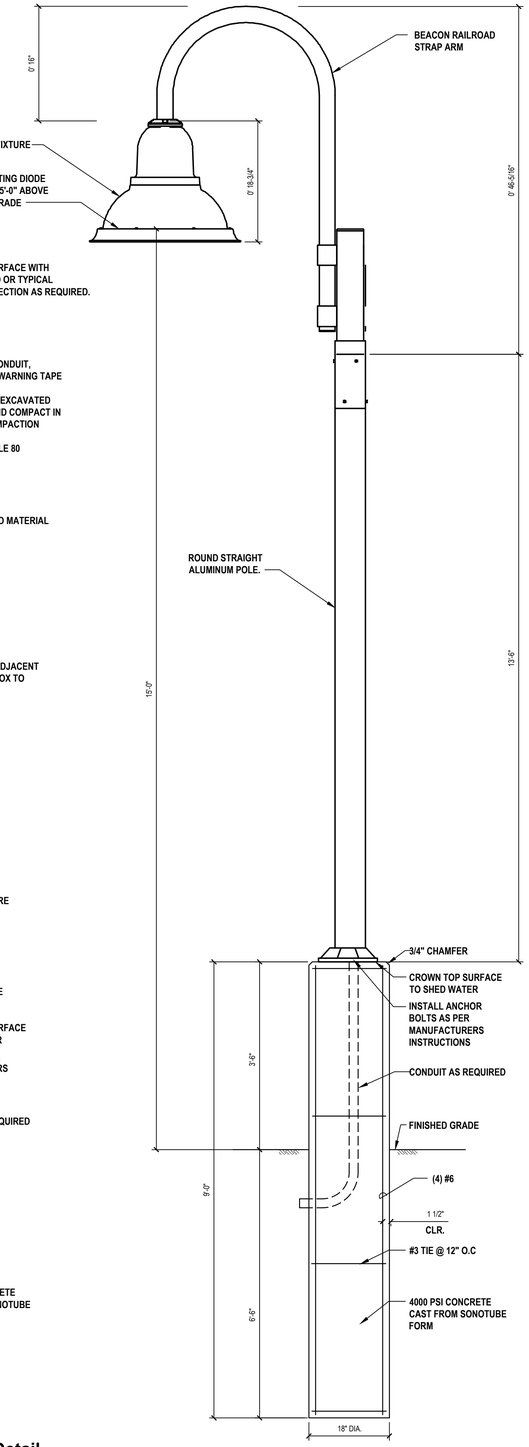

6 Light Pole Base Detail

SCALE:NTS

NOTES:

1. PROVIDE AND INSTALL NEW CONTROLS, CONTROL WIRING, RELAYS, AND CONTACTORS. INSTALL CONTROLS AND CONTACTORS IN NEW NEMA 1 HINGED DOOR ENCLOSURE. PROVIDE LOCKABLE HANDLE.
2. FUNCTION NAMEPLATE DESCRIPTION:
   HAND - MANUAL OPERATION
   OFF - OFF
   AUTO - OPERATION BASED ON SPRING TIMER, THERMOSTAT, OR GAS DETECTION SYSTEM GDS-2

H2M architects + engineers

538 Broad Hollow Road, 4th Floor East
Melville, NY 11747
631.756.8000 • www.h2m.com

CONSULTANTS:

MARK	DATE	DESCRIPTION

STATE OF NEW YORK · ANTHONY W. CIMINO · 092583 · LICENSED PROFESSIONAL ENGINEER

"ALTERATION OF THIS DOCUMENT EXCEPT BY A LICENSED PROFESSIONAL IS ILLEGAL"

DESIGNED BY:	DRAWN BY:	CHECKED BY:	REVIEWED BY:
SMP/CMP	SMP/CMP	AWK	AWK
PROJECT No.: VGFD2001	DATE: JULY 2022	SCALE: AS SHOWN	

CLIENT

VAILS GATE FIRE DISTRICT

New Storage Building (Phase I)
New Fire Station (Phase II)

872 Blooming Grove Turnpike
New Windsor, NY 12553

CONTRACT

CONTRACT G
GENERAL CONSTRUCTION

STATUS

FINAL BID DOCUMENT

SHEET TITLE

MAIN FIRE HOUSE
ELECTRICAL DETAILS
PHASE 2

DRAWING No.

E2 501.00

\\h2m.com\shares\Projects\VGFD \Vails Gate Fire Dept\VGFD2001-\Vails Gate FD-New Firehouse\02-BIM-CADD\Civil-dwg\Main Fire House\E-501.00 - Electrical Details (FA House).dwg Last Modified: Jul 15, 2022 - 2:12pm Plotted on: Jul 15, 2022 - 3:01pm By: pjablecki

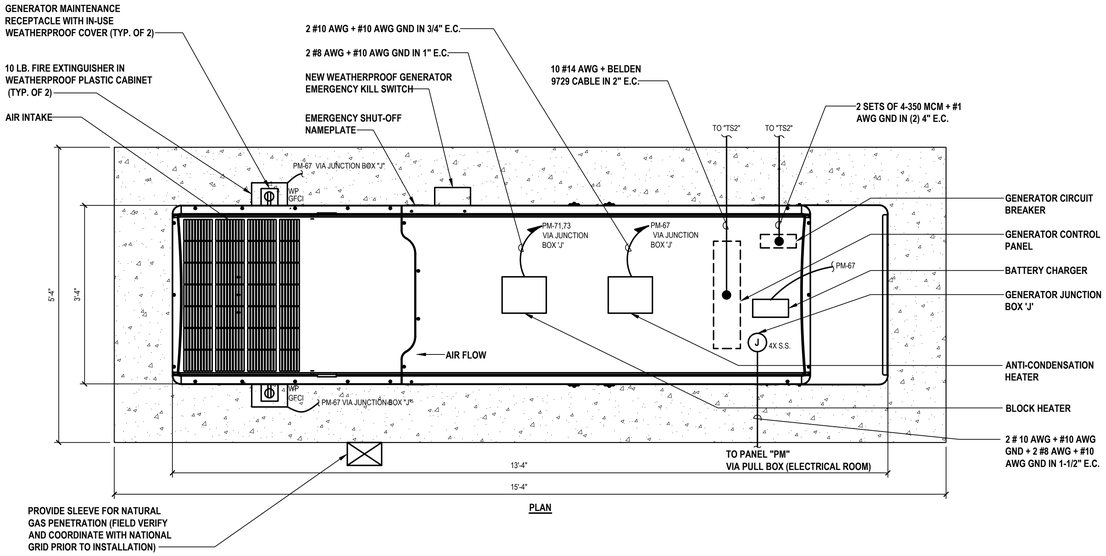

1 **Generator Layout**
SCALE: NO SCALE

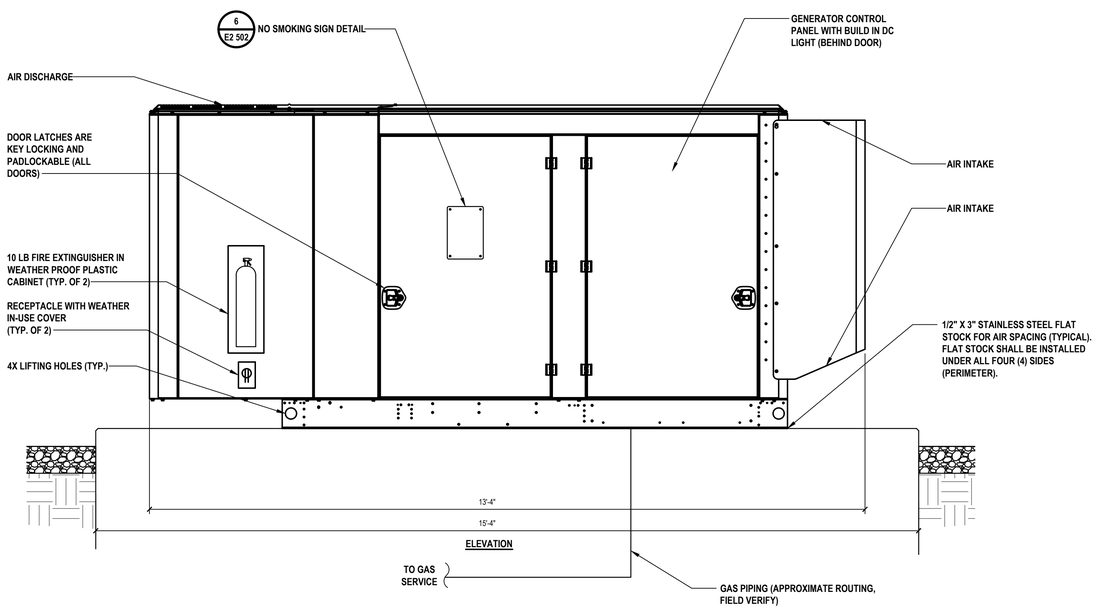

2 **Generator Elevation**
SCALE: NO SCALE

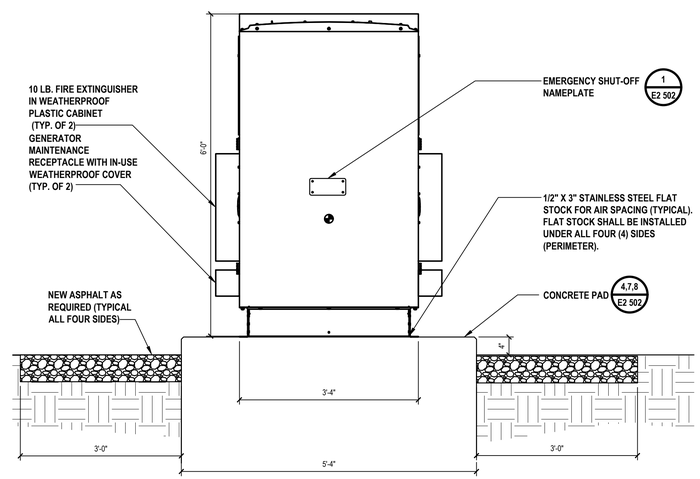

3 **Generator Elevation**
SCALE: NO SCALE

H2M architects + engineers

538 Broad Hollow Road, 4th Floor East
Melville, NY 11747
631.756.8000 • www.h2m.com

CONSULTANTS:

MARK	DATE	DESCRIPTION

STATE OF NEW YORK · ANTHONY WOONG-WIN · LICENSED PROFESSIONAL ENGINEER · 092583

"ALTERATION OF THIS DOCUMENT EXCEPT BY A LICENSED PROFESSIONAL IS ILLEGAL"

DESIGNED BY:	DRAWN BY:	CHECKED BY:	REVIEWED BY:
SMP/CMP	SMP/CMP	AWK	AWK

PROJECT No.:	DATE:	SCALE:
VGFD2001	JULY 2022	AS SHOWN

CLIENT
VAILS GATE FIRE DISTRICT

New Storage Building (Phase I)
New Fire Station (Phase II)

872 Blooming Grove Turnpike
New Windsor, NY 12553

CONTRACT
CONTRACT G
GENERAL CONSTRUCTION

STATUS
FINAL BID DOCUMENT

SHEET TITLE
ELECTRICAL
GENERATOR DETAILS
NEW FIRE STATION
PHASE 2

DRAWING No.
E2 502.00

\\h2m.com\shares\Projects\VGFD (Vails Gate Fire Dept)\VGFD2001-(Vails Gate FD-New Firehouse)\02-BIM-CADD\Con-docs\elec\Main Fire House\E-502.00 - Electrical Generator Details (FA House).dwg Last Modified: Jul 07, 2022 - 4:04pm Plotted on: Jul 15, 2022 - 3:01pm By ppalacios

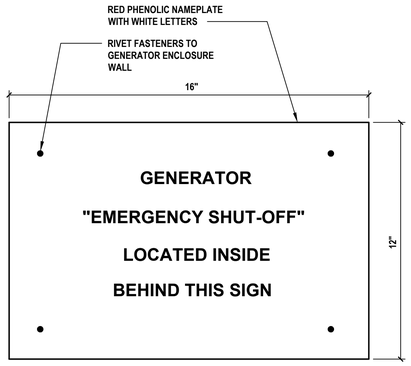

1 Emergency Shut-Off Name Plate
SCALE: NTS

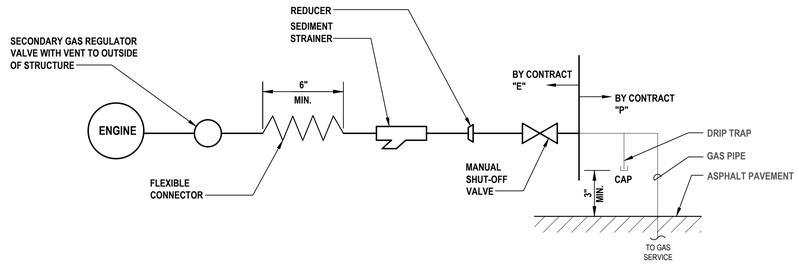

2 Fuel Supply Schematic
SCALE: NO SCALE

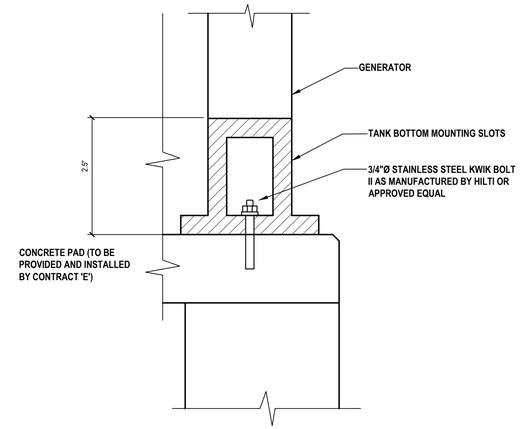

3 Generator Enclosure Anchoring Detail
SCALE: NTS

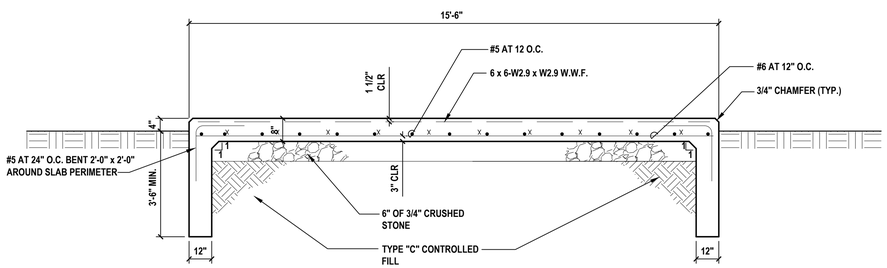

4 Section A-A
SCALE: NO SCALE

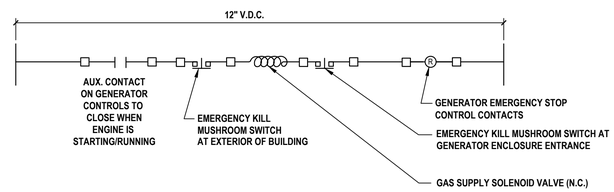

5 Generator Emergency Shutoff Control Circuit
SCALE: NO SCALE

6 No Smoking Sign Detail
SCALE: NTS

NOTE:

1. "NO SMOKING" SIGNS SHALL BE PLACED CONSPICUOUSLY ON GENERATOR ENCLOSURE.

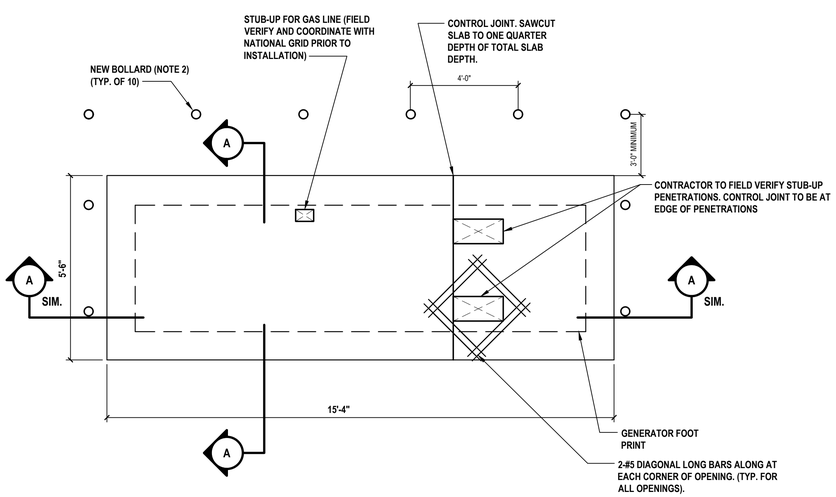

7 Generator Pad Plan
SCALE: NO SCALE

NOTES:

1. PAD DIMENSION BASED ON SPECIFIED EQUIPMENT. 1'-0" MIN ALL AROUND

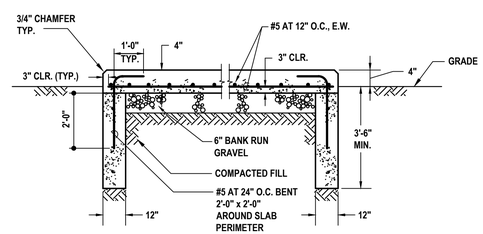

8 Section B-B
SCALE: NTS

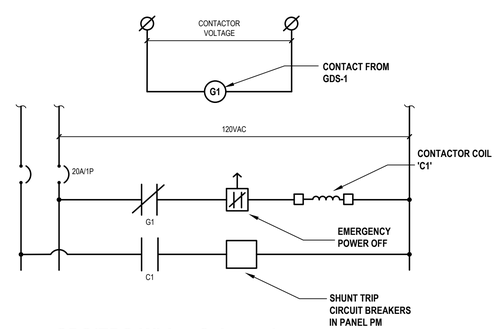

9 GDS/EPO Wiring Schematic
SCALE: NTS

H2M architects + engineers
538 Broad Hollow Road, 4th Floor East
Melville, NY 11747
631.756.8000 • www.h2m.com

CONSULTANTS:

MARK	DATE	DESCRIPTION

STATE OF NEW YORK · ANTHONY WIGNAL · 082583 · LICENSED PROFESSIONAL ENGINEER

"ALTERATION OF THIS DOCUMENT EXCEPT BY A LICENSED PROFESSIONAL IS ILLEGAL"

DESIGNED BY:	DRAWN BY:	CHECKED BY:	REVIEWED BY:
SMP/CMP	SMP/CMP	AWK	AWK
PROJECT No.: VGFD2001	DATE: JULY 2022	SCALE: AS SHOWN	

CLIENT

VAILS GATE FIRE DISTRICT

New Storage Building (Phase I)
New Fire Station (Phase II)

872 Blooming Grove Turnpike
New Windsor, NY 12553

CONTRACT

CONTRACT G
GENERAL CONSTRUCTION

STATUS

FINAL BID DOCUMENT

SHEET TITLE

ELECTRICAL DETAILS
NEW FIRE STATION
PHASE 2

DRAWING No.

E2 503.00

C:\Users\cpilegg\appdata\local\temp\AcPublish_34840\DC-503.00 - Electrical Generator Details (Fire House).dwg Last Modified: Jul 15, 2022 - 2:12pm Plotted on: Aug 01, 2022 - 8:53am By: CPilegg

EXTERIOR LIGHTING FIXTURE SCHEDULE

DESIGNATION	SYMBOL	MANUFACTURER	MODEL NUMBER	TYPE	WATTS	COLOR TEMPERATURE	VOLTAGE	LUMENS	MOUNTING	REMARKS	MOUNTING HEIGHT
	EF1	BEACON	URB-CAP-21-24L-55-4K7-UNV-4-BC	LED	27	4000K	UNV	6323	POLE	PARKING LOT POLE LIGHTING POLE MODEL NUMBER: RSA-B-SHO-S-15-40-A/B/C-CAP-2L-B3-DBT-VM2	15'-0" AFF
	EF2	LIGHTOLOGY	TLG748936	LED	18	2700K	UNV	1200	WALL MOUNT SURFACE		
	EF3	HUBBELL	QSP2-24L-30-4K7-4	LED	30	3000K	UNV	3284	WALL MOUNT SURFACE	EMERGENCY BATTERY BACKUP WITH 90 MINUTES OF BACKUP CAPACITY	6" ABOVE DOOR
	EF4	XOOLIGHT	RGB-HD20-W-T-IP67	LED			24VDC		SURFACE	EXTERIOR LINEAR SOFFIT MOUNTED IN EXTERIOR SOFFIT	-
	EF5	PROGRESS LIGHTING	P560211-031-30	LED	11	3000K	UNV	847	SURFACE	SCONCE LIGHTING	-
	EF6	ARCHITECTURAL AREA LIGHTING	UCS-LUM-FLR12LED-NW-XX	LED	27	4000K	UNV	1497	WALL MOUNT SURFACE		10'-8" AFF
	EF7	ARCHITECTURAL AREA LIGHTING	UCM2-LUM-FLR36L3254K74WBLS WMA12	LED	40	4000K	UNV	4657	WALL MOUNT SURFACE		18'-0" AFF
	EF8	HUBBELL	LBUL-20-4K	LED	20	4000K	UNV	2690	SURFACE	FLAG POLE LIGHT	

LIGHTING CONTROLS SCHEDULE

TYPE	MANUFACTURER	MODEL NUMBER	VOLTAGE	MOUNTING	MOUNTING HEIGHT	REMARKS
S_{VS}	HUBBELL	LHDMIRS3-N-WH-M	120V	WALL MOUNTED	48"AFF	VS DENOTES VACANCY SENSOR
P-X A PP1	HUBBELL	UVPP	-	AFC	CEILING	POWER PACK
PC-1	HUBBELL	DLCPCO	24VDC			PHOTOCELL
OSW	HUBBELL	SENSOR: WSP-SM-24V-WH + LENS: WSP-L360-WH	24VDC	CEILING MOUNTED SURFACE	21'-9" AFF	APPARATUS BAY OCCUPANCY SENSOR
OS	HUBBELL	NXOS-OMDT2	24VDC	CEILING MOUNTED SURFACE	CEILING	OCCUPANCY SENSOR
VS	HUBBELL					
RC	HUBBELL	NXRCFX-2RD-UNV	120V			ROOM CONTROLLER
	HUBBELL	CX082S082NM	UNV	WALL MOUNTED SURFACE		EXTERIOR LIGHTING CONTROL PANEL
INV-1	DUAL LITE	LG250-S	UNV	WALL MOUNTED SURFACE		EXTERIOR LIGHTING INVERTER

CONTRACTOR SHALL COORDINATE ALL DEVICE COLORS AND FACEPLATES WITH ARCHITECT/OWNER IN FIELD.

* PIR = PASSIVE INFRARED

NOTES:

1. CONTRACTOR SHALL PROVIDE ALL MATERIALS AND ACCESSORIES AS REQUIRED TO PROVIDE FULL FUNCTIONING LIGHTING CONTROL SYSTEM TO FUNCTION AS SHOWN IN THE CONSTRUCTION DOCUMENTS. ALL SUBSTITUTE CONTROLS WILL REQUIRE SUBMISSION OF NEW CONTROL LAYOUT, STAMPED BY A PROFESSIONAL ENGINEER. SUBSTITUTE CONTROLS SHALL FUNCTION AS DESIGNED ON THE CONTRACT DOCUMENTS AND CONTRACTOR SHALL GUARANTEE FUNCTIONALITY.
2. CONTRACTOR SHALL REFER TO CONTRACT DRAWINGS FOR SPECIFIC OUTPUT CONTROLS, AND DIMMING REQUIRED FOR ROOM CONTROLLER.
3. ALL SWITCHES AND SWITCH BANKS TYPES SHALL BE COORDINATED WITH THE ENGINEER/DISTRICT IN FIELD.
4. REFER TO DRAWING E 121A, E 121B, AND E122B FOR MOUNTING HEIGHT OF LIGHT FIXTURES. CONTRACTOR SHALL FIELD VERIFY AND COORDINATE WITH MANUFACTURER TO PROVIDE AND INSTALL CUSTOM CABLE LENGTHS FOR PENDANT MOUNTED FIXTURES TO BE INSTALLED. PROVIDE AND INSTALL ALL REQUIRED MOUNTING HARDWARE AND ACCESSORIES.

EXTERIOR LIGHTING CONTROL PANEL RELAY SCHEDULE

RELAY	VOLTAGE/POLE	PANEL-CIRCUIT No.	LOAD	CONTROLS
1	120/1	PR-40,PR-42	PARAPET RECEPTACLES	TIMER
2	120/1	PL-10	EXTERIOR BUILDING LIGHTING	PHOTOCELL/TIMER
3	208/1	PL-30,32	EXTERIOR POLE LIGHT FIXTURES	PHOTOCELL/TIMER
4	120/1	PM-2	GX-4	TIMER

INTERIOR LIGHTING FIXTURE SCHEDULE

DESIGNATION	SYMBOL	MANUFACTURER	MODEL NUMBER	TYPE	WATTS	COLOR TEMPERATURE	VOLTAGE	LUMENS	MOUNTING	REMARKS	MOUNTING HEIGHT
	F1	COLUMBIA	LCAT22-35-ML-G-ED-U	LED	29	3500K	UNV	3532	RECESSED		CEILING
	F1E	COLUMBIA	LCAT22-35-ML-G-ED-U-ELL-14ST	LED	29	3500K	UNV	3532	RECESSED	EMERGENCY BATTERY BACKUP WITH 90 MINUTES OF BACKUP CAPACITY	CEILING
	F2	COLUMBIA	LAW-4-35-HL-E-U	LED	51	3500K	UNV	5714	PENDANT	OPEN CEILING	NOTE 4
	F2E	COLUMBIA	LAW-4-35-HL-E-U-ELL14	LED	51	3500K	UNV	5714	PENDANT	EMERGENCY BATTERY BACKUP WITH 90 MINUTES OF BACKUP CAPACITY OPEN CEILING	NOTE 4
	F3	HUBBELL LITECONTROL	6L-R-D-4-SOF-X-CX-35K-D080-1C-UNV	LED	27	3500K	UNV	3200	RECESSED	GEAR ROOM	CEILING
	F3E	HUBBELL LITECONTROL	6L-R-D-4-SOF-X-CX-35K-D080-UNV-1C-EF	LED	27	3500K	UNV	3200	RECESSED	EMERGENCY BATTERY BACKUP WITH 90 MINUTES OF BACKUP CAPACITY GEAR ROOM	CEILING
	F4	PRESCOLITE	LTR-6SQD-H-SL15L-DM1 / LTR-6SQD-T-SL35K8WD	LED	19	3500K	UNV	1000	RECESSED	LOBBY 125A / VESTIBULE RECESSED SQUARE DOWNLIGHT	CEILING
	F4E	PRESCOLITE	LTR-6SQD-H-SL10LDM1EM / LTR-6SQD-T-SL35K8WD	LED	19	3500K	UNV	1000	RECESSED	LOBBY 125A / VESTIBULE RECESSED SQUARE DOWNLIGHT	CEILING
	F5	COLUMBIA	CFP22-40-33-2835	LED	26	3500K	UNV	3458	RECESSED	KITCHEN AND BATHROOMS (AT 2800LM)	CEILING
	F5	COLUMBIA	CFP22-40-33-2835-PLD10M	LED	26	3500K	UNV	3458	RECESSED	KITCHEN AND BATHROOMS (AT 2800LM) EMERGENCY LED BATTERY PACK FIELD INSTALLED	CEILING
	F6	HUBBELL LITECONTROL	4LPIDSTD4'04SOF35K-I030D110D011CUNV	LED	36	3500K	UNV	300	PENDANT	APP BAY OPEN SIDE OF EXERCISE ROOM	NOTE 4
	F6E	HUBBELL LITECONTROL	4LPIDSTD4'04SOF35K-I030D110D011CUNVEF	LED	36	3500K	UNV	300	PENDANT	APP BAY OPEN SIDE OF EXERCISE ROOM	NOTE 4
	F7	PRESCOLITE	LTR4SQDHSL06LDM1 / LTR-4SQD-T-SHSL35K8VNR-S	LED	8	3500K	UNV	705	RECESSED	ALL SHOWERS	CEILING
	F7E	PRESCOLITE	LTR4SQDHSL06LDM1-EMR / LTR-4SQD-T-SHSL35K8VNR-S	LED	8	3500K	UNV	705	RECESSED	ALL SHOWERS	CEILING
	F8	HUBBELL LITECONTROL	4L-W-ID-LPA4SOF35K-I050-D050-D01-1C-UNV	LED	15	4000K	UNV	2000	SURFACE (WALL MOUNT)	RADIO ROOM	14'-0" A.F.F.
	EX	COMPASS LIGHTING	CELS1GNE	LED	1	3000K	UNV	-	SURFACE	EMERGENCY BATTERY BACKUP WITH 90 MINUTES OF BACKUP CAPACITY (NOTE EL2)	6" ABOVE DOOR
	F10	HUBBELL LITECONTROL	2LWAD404ASYMC135KD100NDMUNV	LED	48	3500K	UNV	1000	SURFACE (WALL MOUNT)	STAIRWELL	
	F10E	HUBBELL LITECONTROL	2LWAD404ASYMC135KD100NDMUNVEF	LED	48	3500K	UNV	1000	SURFACE (WALL MOUNT)	EMERGENCY BATTERY BACKUP WITH 90 MINUTES OF BACKUP CAPACITY (NOTE EL2)	
	F11	COLUMBIA	MPS435LWXWU	LED	27	3500K	UNV	3753	SURFACE	TOOL COVE, CLOSET 125B	6" ABOVE DOOR
	F12	HUBBELL	VWGL-2	LED	11	4000K	UNV	2722	SURFACE (WALL MOUNT)	ELEVATOR PIT AND ACCESS UNDER STAIR B	WALL
	F13	3G LIGHTING	3G2RLIRGBWL250S80-UNV-DMX-FL-RECTANGLE34FTX20FT	LED	1.9W/FT	4000K	UNV	250LM/FT	RECESSED	MEETING ROOM RECESSED FIXTURES	CEILING
	F14	COLUMBIA	MPS8-35XL-CW-EDU	LED	113	3500K	UNV	15958	PENDANT	APPARATUS BAY	21'-6" A.F.F.
	F14E	COLUMBIA	MPS8-35XL-CW-EDU-ELL14	LED	113	3500K	UNV	15958	PENDANT	APPARATUS BAY	21'-6" A.F.F.
	F15	COLUMBIA	LCAT22-35-LW-G-ED-U	LED	23	3500K	UNV	3532	RECESSED		CEILING
	F15E	COLUMBIA	LCAT22-35-LW-G-ED-U-ELL-14ST	LED	23	3500K	UNV	3532	RECESSED	EMERGENCY BATTERY BACKUP WITH 90 MINUTES OF BACKUP CAPACITY	CEILING

LIGHT FIXTURE SCHEDULE NOTES:

EL1. CONTRACTOR SHALL PROVIDE, INSTALL, LOCATE AND MOUNT OCCUPANCY SENSOR AS PER MANUFACTURES RECOMMENDATIONS. CONTRACTOR SHALL NOT MOUNT OCCUPANCY SENSOR DIRECTLY TO SLOPED CEILING. CONTRACTOR SHALL PROVIDE AND INSTALL MOUNTING HARDWARE TO ENSURE OCCUPANCY SENSOR LENS FACE IS ORIENTATED DOWNWARD, FACING THE FINISHED FLOOR.

EL2. CONTRACTOR SHALL COVER LEFT AND RIGHT ILLUMINATED DIRECTIONAL ARROWS AS PER MANUFACTURER'S RECOMMENDATIONS.

SPARE EQUIPMENT:

SE1. IN ADDITION TO THE EQUIPMENT SHOWN ON THE DRAWINGS, THE CONTRACTOR SHALL INCLUDE THE COST FOR PROVIDING THE FOLLOWING SPARE EQUIPMENT TYPES IN THE BASE BID. CONTRACTOR SHALL INCLUDE IN BASE BID THE COST TO DELIVER THE FOLLOWING EQUIPMENT TO A STORAGE LOCATION DESIGNATED BY THE OWNER. REFER TO THE LIGHT FIXTURE SCHEDULE ABOVE FOR ADDITIONAL INFORMATION.

H2M architects + engineers

538 Broad Hollow Road, 4th Floor East
Melville, NY 11747
631.756.8000 • www.h2m.com

CONSULTANTS:

MARK	DATE	DESCRIPTION

STATE OF NEW YORK · ANTHONY W. CIOFFI · 082583 · LICENSED PROFESSIONAL ENGINEER

"ALTERATION OF THIS DOCUMENT EXCEPT BY A LICENSED PROFESSIONAL IS ILLEGAL"

DESIGNED BY:	DRAWN BY:	CHECKED BY:	REVIEWED BY:
SMP/CMP	SMP/CMP	AWK	AWK
PROJECT No.: VGFD2001	DATE: JULY 2022	SCALE: AS SHOWN	

CLIENT

VAILS GATE FIRE DISTRICT

New Storage Building (Phase I)
New Fire Station (Phase II)

872 Blooming Grove Turnpike
New Windsor, NY 12553

CONTRACT

CONTRACT G
GENERAL CONSTRUCTION

STATUS

FINAL BID DOCUMENT

SHEET TITLE

ELECTRICAL SCHEDULES
NEW FIRE STATION
PHASE 2

DRAWING No.

E2 600.00

\\h2m.com\shares\Projects\VGFD (Vails Gate Fire Dept)\VGFD2001-(Vails Gate FD-New Firehouse)\02-BIM-CADD\Civil-docs\elec\Main Fire House\E-600.00 - Electrical Schedules (FA House).dwg Last Modified: Jul 15, 2022 - 12:04am Plotted on: Jul 15, 2022 - 3:10pm By:pgalacios

Name

Panelboard: PC | Voltage: 208Y/120 | Phase: 3 | Wire 4 | A.I.C. Rating: 42,000
Manufacturer: SIEMENS | Mains: 225A MCB | Mains Rating: 225 A
Panel Type: P2 | Mounting: SURFACE | Options: | Notes: IN TRAINING ROOM
NEMA Type Enclosure 1

Load Description	Breaker Option	Trip	Poles	Circ No.	A	B	C	A	B	C	Circ No.	Poles	Trip	Breaker Option	Load Description
203B HOOD		20 A	1	1	288 VA			1500 VA			2	1	20 A		207 ELLIPTICAL
207 EXERCISE BIKE		20 A	1	3		360 VA			500 VA		4	1	20 A		PANEL 'UHCP'
206 FLOOR REC.		20 A	1	5			1440 VA			1440 VA	6	1	20 A		206 FLOOR REC.
203B RANGE	GFCI/ST	20 A	1	7	1800 VA			1080 VA			8	1	20 A		STORAGE 204,205 REC.
203B REFRIGERATOR	GFCI	20 A	1	9		1800 VA			750 VA		10	2	30 A	GFEP	HEAT TRACER HT-D, HT-MAU, HT-208
TRAINING ROOM 206 REC.		20 A	1	11			1080 VA			750 VA	12				
206 FLOOR REC.		20 A	1	13	1440 VA			1500 VA			14	1	20 A		207 STAIR MILL
TRAINING ROOM 206 REC.		20 A	1	15		1080 VA			1440 VA		16	1	20 A		COMPANY ROOM 203A REC.
CONFERENCE ROOM 202 REC.		20 A	1	17			1440 VA			1500 VA	18	1	20 A		207 TREADMILL
SPARE	--	20 A	1	19	0 VA			0 VA			20	1	20 A	--	SPARE
207 TREADMILL		20 A	1	21		1500 VA			0 VA		22	1	20 A	--	SPARE
SPARE	--	20 A	1	23			0 VA			0 VA	24	1	20 A	--	SPARE
SPARE	--	20 A	1	25	0 VA			0 VA			26	1	20 A	--	SPARE
SPARE	--	20 A	1	27		0 VA			0 VA		28	1	20 A	--	SPARE
SPARE	--	20 A	1	29			0 VA			0 VA	30	1	20 A	--	SPARE
SPARE	--	20 A	1	31	0 VA			0 VA			32	1	20 A	--	SPARE
SPARE	--	20 A	1	33		0 VA			0 VA		34	1	20 A	--	SPARE
SPARE	--	20 A	1	35			0 VA			0 VA	36	1	20 A	--	SPARE
SPARE	--	20 A	1	37	0 VA			0 VA			38	1	20 A	--	SPARE
SPARE	--	20 A	1	39		0 VA			0 VA		40	1	20 A	--	SPARE
SPARE	--	20 A	1	41			0 VA			0 VA	42	1	20 A	--	SPARE

Connected Totals: A 7.6 kVA
B 7.4 kVA
C 7.7 kVA
Total: 22.7 kVA
Amps 63 A

(All Phases to be balanced to within 7% Actual Load Totals)

Breaker Option
AS - Powerlink AS Breaker
LO - Handle Lock-off Device
ST - Shunt Trip Type
AUX - Auxillary Contacts
PA - Handle Padlock Attchment
GFCI - Ground Fault Circuit Interrupter
HACR - Heating, A/C & Refrigeration
SF - Subfeed
TC - Time Clock Control

Name

Panelboard: PL | Voltage: 208Y/120 | Phase: 3 | Wire 4 | A.I.C. Rating: 42,000
Manufacturer: SIEMENS | Mains: MLO | Mains Rating: 225 A
Panel Type: P2 | Mounting: SURFACE | Options: | Notes: IN ELECTRICAL ROOM
NEMA Type Enclosure 1

Load Description	Breaker Option	Trip	Poles	Circ No.	A	B	C	A	B	C	Circ No.	Poles	Trip	Breaker Option	Load Description
Other		20 A	1	1	0 VA			240 VA			2	1	20 A		Other
ROOMS 119,114,117,115		20 A	1	3		259 VA			710 VA		4	1	20 A		ROOMS 120,121,122,127,128,118
KX HOOD	ST	20 A	1	5			360 VA			742 VA	6	1	20 A		ROOMS 102,3,4,5,6,7,8,9,11
FIRST FLOOR CORRIDOR		20 A	1	7	659 VA			1000 VA			8	1	30 A		GEN. SHORE POWER
ELCP-2		20 A	1	9		945 VA			1398 VA		10	1	20 A		MEETING ROOM 116
210,201,209,208,203B,204,205		20 A	1	11			1002 VA			1003 VA	12	1	20 A		206,207,216,217,218,219,220
APP. BAY/MEZZANINE		20 A	1	13	1541 VA			2496 VA			14	2	30 A		POWER WASHER
				15					2496 VA		16				
2ND FLR. OFFICES/ COMP. ROOMS		20 A	1	17			1069 VA			1544 VA	18	1	20 A		APP. BAY/MEZZANINE
				19				1200 VA			20				
ECLP-3		20 A	2	21		115 VA			1200 VA		22	3	20 A		HVLS-1
				23			115 VA			1200 VA	24				
				25	1200 VA			1200 VA			26				
HVLS-2		20 A	3	27		1200 VA			1200 VA		28	3	20 A		HVLS-3
				29			1200 VA			1200 VA	30				
				31	2880 VA			0 VA			32	1	20 A	--	SPARE
LAUNDRY ROOM DRYER	GFCI	30 A	3	33		2880 VA			0 VA		34	1	20 A	--	SPARE
				35			2880 VA			0 VA	36	1	20 A	--	SPARE
SPARE	--	20 A	1	37	0 VA			0 VA			38	1	20 A	--	SPARE
SPARE	--	20 A	1	39		0 VA			0 VA		40	1	20 A	--	SPARE
SPARE	--	20 A	1	41			0 VA			0 VA	42	1	20 A	--	SPARE

Connected Totals: A 12.4 kVA
B 12.4 kVA
C 12.3 kVA
Total: 37.1 kVA
Amps 103 A

(All Phases to be balanced to within 7% Actual Load Totals)

Breaker Option
AS - Powerlink AS Breaker
LO - Handle Lock-off Device
ST - Shunt Trip Type
AUX - Auxillary Contacts
PA - Handle Padlock Attchment
GFCI - Ground Fault Circuit Interrupter
HACR - Heating, A/C & Refrigeration
SF - Subfeed
TC - Time Clock Control

Name

Panelboard: MDP | Voltage: 208Y/120 | Phase: 3 | Wire 4 | A.I.C. Rating: 65,000
Manufacturer: SIEMENS | Mains: 800A MCB | Mains Rating: 800 A
Panel Type: P4 | Mounting: SURFACE | Options: | Notes:
NEMA Type Enclosure 1

Load Description	Breaker Option	Trip	Poles	Circ No.	A	B	C	A	B	C	Circ No.	Poles	Trip	Breaker Option	Load Description
ELAVATOR CONTROL PANEL		20 A	1	1	200 VA						2				
				3							4				
				5			7608 VA			12416 VA	6				
PANEL PC		225 A	3	7	7430 VA			12403 VA			8	3	225 A		PANEL PL
				9		7650 VA			12315 VA		10				
				11			15531 VA			23293 VA	12				
PANEL PR		225 A	3	13	15540 VA			23238 VA			14	3	225 A		PANEL PM
				15		15520 VA			23284 VA		16				
				17			0 VA			2004 VA	18				
SIREN CONTROL PANEL		40 A	3	19	0 VA			2004 VA			20	3	30 A		VX
				21		0 VA			2004 VA		22				
				23			2880 VA			3360 VA	24				
SURGE SUPPRESSION		30 A	3	25	2880 VA			3360 VA			26	3	30 A	ST	ELEVATOR
				27		2880 VA			3360 VA		28				
				29			5544 VA			6432 VA	30				
SCBA TANK FILLER		80 A	3	31	5544 VA			6432 VA			32	3	70 A	HACR	CU-1
				33		5544 VA			6432 VA		34				
				35			6432 VA			13140 VA	36				
CU-2	HACR	70 A	3	37	6432 VA			13140 VA			38	3	125 A	HACR	DOAS-1
				39		6432 VA			13140 VA		40				
SPARE	--	20 A	1	41			0 VA			0 VA	42	1	20 A	--	SPARE

Connected Totals: A 98.6 kVA
B 98.6 kVA
C 98.6 kVA
Total: 295.8 kVA
Amps 821 A

(All Phases to be balanced to within 7% Actual Load Totals)

Breaker Option
AS - Powerlink AS Breaker
LO - Handle Lock-off Device
ST - Shunt Trip Type
AUX - Auxillary Contacts
PA - Handle Padlock Attchment
GFCI - Ground Fault Circuit Interrupter
HACR - Heating, A/C & Refrigeration
SF - Subfeed
TC - Time Clock Control

Name

Panelboard: PM | Voltage: 208Y/120 | Phase: 3 | Wire 4 | A.I.C. Rating: 42,000
Manufacturer: SIEMENS | Mains: MLO | Mains Rating: 225 A
Panel Type: P2 | Mounting: SURFACE | Options: | Notes: IN ELECTRICAL ROOM
NEMA Type Enclosure 1

Load Description	Breaker Option	Trip	Poles	Circ No.	A	B	C	A	B	C	Circ No.	Poles	Trip	Breaker Option	Load Description
CUH-A	HACR	20 A	1	1	84 VA			200 VA			2	1	20 A		GDS-2
CUH-126/ERXF-122	HACR	20 A	1	3		134 VA			240 VA		4	1	20 A		MAU-1 (CONTROL PANEL)
CUH-B	HACR	15 A	1	5			84 VA			240 VA	6	1	15 A	HACR	GX-4
GX-1S STARTER CIRCUIT		20 A	1	7	300 VA			900 VA			8	1	20 A		SEC. FLOOR CDP-A
KITCHEN HOOD	ST	20 A	1	9		780 VA			960 VA		10	1	20 A		LRS-1
TX-1		15 A	1	11			480 VA			900 VA	12	1	20 A		SEC. FLOOR OFFICES CDP-A
UH-1, UH-2	HACR	20 A	1	13	1104 VA			1500 VA			14	1	20 A		BATTERY CHARGER
CDP-A		20 A	1	15		1440 VA			1800 VA		16	1	20 A		GEAR DRYER
UH-3, UH-4	HACR	20 A	1	17			1104 VA			1500 VA	18	1	20 A		GEN. RECEPT./ANTI-COND. HTR
BL-1	ST	20 A	1	19	1920 VA			0 VA			20	2	20 A	HACR	HHWP-4 (STAND-BY)
TX-2		20 A	1	21		120 VA			0 VA		22				
BL-2	ST	20 A	1	23			1920 VA			120 VA	24	1	20 A		TX-3
HHWP-6 (STAND-BY)	HACR	20 A	2	25	0 VA			184 VA			26	2	15 A	HACR	BC-4, EU-211,212,213,214,215,216
				27		0 VA			184 VA		28				
KITCHEN 118 RANGE REC.	ST	20 A	1	29			408 VA			624 VA	30	2	20 A	HACR	HHWP-5
BC-1, EU114,118,120,FCU-102	HACR	15 A	2	31	292 VA			624 VA			32				
				33		292 VA			694 VA		34	2	15 A	HACR	BC-3, EU-202,203, FCU-204A,206
				35						694 VA	36				
KX-118	HACR	15 A	2	37	676 VA			120 VA			38	1	20 A		GDS-1
				39		676 VA			728 VA		40	2	20 A	HACR	HHWP-3
BC-2,FCU-116-1,2,3,EU-125A	HACR	15 A	2	41			948 VA			728 VA	42				
				43	948 VA			1040 VA			44	2	15 A	HACR	OU-1
WEH-12	HACR	20 A	2	45		750 VA			1040 VA		46				
				47			750 VA			2288 VA	48	2	70 A		MEZZANINE COMPRESSOR
GX-2	HACR	20 A	1	49	408 VA			2288 VA			50				
MEZZANINE COMPRESSOR		70 A	2	51		2288 VA			408 VA		52	1	20 A	ST	KITCHEN 118 RANGE REC.
				53			2288 VA			0 VA	54				
BLOCK HEATER	HACR	30 A	2	55	2496 VA			0 VA			56	3	20 A	HACR	HHWP-2 (STAND-BY)
				57		2496 VA			0 VA		58				
				59			468 VA			1272 VA	60				
MAU-1 (FAN MOTOR)	HACR	15 A	3	61	468 VA			1272 VA			62	3	20 A	HACR	HHWP-1
				63		468 VA			1272 VA		64				
				65			1320 VA			1740 VA	66				
GX-1	HACR	20 A	3	67	1320 VA			1740 VA			68	3	20 A	HACR	MAU-1 (CONDENSER)
				69		1320 VA			1740 VA		70				
				71			3408 VA			0 VA	72	1	20 A	--	SPARE
RTU-208	HACR	35 A	3	73	3408 VA			0 VA			74	1	20 A	--	SPARE
				75		3408 VA			0 VA		76	1	20 A	--	SPARE
SPARE	--	20 A	1	77			0 VA			0 VA	78	1	20 A	--	SPARE

Connected Totals: A 23.3 kVA
B 23.2 kVA
C 23.3 kVA
Total: 69.8 kVA
Amps: 194 A

(All Phases to be balanced to within 7% Actual Load Totals)

Breaker Option
AS - Powerlink AS Breaker
LO - Handle Lock-off Device
ST - Shunt Trip Type
AUX - Auxillary Contacts
PA - Handle Padlock Attchment
GFCI - Ground Fault Circuit Interrupter
HACR - Heating, A/C & Refrigeration
SF - Subfeed
TC - Time Clock Control

Name

Panelboard: PR | Voltage: 208Y/120 | Phase: 3 | Wire 4 | A.I.C. Rating: 42,000
Manufacturer: SIEMENS | Mains: MLO | Mains Rating: 225 A
Panel Type: P2 | Mounting: SURFACE | Options: | Notes: IN ELECTRICAL ROOM
NEMA Type Enclosure 1

Load Description	Breaker Option	Trip	Poles	Circ No.	A	B	C	A	B	C	Circ No.	Poles	Trip	Breaker Option	Load Description
CP-1,CP-2		20 A	1	1	167 VA			444 VA			2	1	20 A	GFCI	118 FREEZER
COMISSIONERS 211 REC.		20 A	1	3		180 VA			500 VA		4	1	20 A		CEILING CORD REEL
DISPLAY CASES		20 A	1	5			360 VA			540 VA	6	1	20 A		GEAR ROOM AIR DROPS
GEAR ROOM POWER STRIP		20 A	1	7	540 VA			648 VA			8	1	20 A	GFCI	118 REFRIGERATOR
"OH-1" DOOR MOTOR		20 A	1	9		600 VA			720 VA		10	1	20 A		DF-2 FOUNTAIN
"OH-2" DOOR MOTOR		20 A	1	11			600 VA			720 VA	12	1	20 A		GEAR ROOM POWER STRIP
118 ICE MACHINE	GFCI	20 A	1	13	1464 VA			1608 VA			14	1	20 A	GFCI	118 MICROWAVE
GEAR ROOM REC.		20 A	1	15		1080 VA			1800 VA		16	1	20 A		FIRST FLOOR LOBBY REC.
LAUNDRY ROOM WASHER		20 A	1	17			1200 VA			1440 VA	18	1	20 A		CHIEF OFFICES 214,215
DISPLAY CASES		20 A	1	19	180 VA			360 VA			20	1	20 A		RADIO ROOM REC.
HVLS-1,2,3 CONTROL PANEL REC.		20 A	1	21		180 VA			360 VA		22	1	20 A		RADIO ROOM REC.
MV-1		20 A	1	23			180 VA			360 VA	24	1	20 A		RADIO ROOM REC.
EXERCISE ROOM 207 REC.		20 A	1	25	360 VA			500 VA			26	1	20 A		CEILING CORD REEL
KITCHEN EMERGENCY SWITCHES		20 A	1	27		360 VA			500 VA		28	1	20 A		CEILING CORD REEL
MEZZANINE REC.		20 A	1	29			360 VA			500 VA	30	1	30 A		IT. ROOM CEILING REC.
CEILING CORD REEL		20 A	1	31	500 VA			540 VA			32	1	20 A		GEAR ROOM POWER STRIP
CEILING CORD REEL		20 A	1	33		500 VA			540 VA		34	1	20 A		RADIO ROOM REC.
CEILING CORD REEL		20 A	1	35			500 VA			540 VA	36	1	20 A		ROOF MAINTENANCE REC.
"OH-6" DOOR MOTOR		20 A	1	37	600 VA			600 VA			38	1	20 A		"OH-3" DOOR MOTOR
DF-1 FOUNTAIN		20 A	1	39		600 VA			600 VA		40	1	20 A		"OH-4" DOOR MOTOR
WH-1	HACR	20 A	1	41			600 VA			600 VA	42	1	20 A		"OH-5" DOOR MOTOR
OUTDOOR REC.		20 A	1	43	720 VA			900 VA			44	1	20 A		GEAR ROOM POWER STRIP
ROOMS 216,217,218,219,220 REC.		20 A	1	45		720 VA			900 VA		46	1	20 A		ROOMS 119,114,117,115 REC.
TOOL POWER STRIP		20 A	1	47			720 VA			900 VA	48	1	20 A		STORAGE/ DECON ROOM REC
MEETING ROOM 116 REC.		20 A	1	49	1080 VA			1260 VA			50	1	20 A		FIRST FLOOR CORRIDOR REC.
MEETING ROOM 119 REC.		20 A	1	51		1080 VA			1260 VA		52	1	20 A		SCBA 109,111 REC.
NETWORK IT. ROOM REC.		20 A	1	53			1080 VA			1260 VA	54	1	20 A		SUMP PUMP REC.
CORRIDOR 210,209,208 REC.		20 A	1	55	1440 VA			1620 VA			56	1	20 A		118 COUNTER REC
GEAR ROOM POWER STRIP		20 A	1	57		1440 VA			1620 VA		58	1	20 A		APP. BAY REC.
OFFICE 212, 213 REC.		20 A	1	59			1440 VA			1620 VA	60	1	20 A		READY / ELEC. / MECH. ROOM REC.
SPARE	--	20 A	1	61	0 VA			0 VA			62	1	20 A	--	SPARE
SPARE	--	20 A	1	63		0 VA			0 VA		64	1	20 A	--	SPARE
SPARE	--	20 A	1	65			0 VA			0 VA	66	1	20 A	--	SPARE

Connected Totals: A 15.5 kVA
B 15.5 kVA
C 15.5 kVA
Total: 46.6 kVA
Amps: 129 A

(All Phases to be balanced to within 7% Actual Load Totals)

Breaker Option
AS - Powerlink AS Breaker
LO - Handle Lock-off Device
ST - Shunt Trip Type
AUX - Auxillary Contacts
PA - Handle Padlock Attchment
GFCI - Ground Fault Circuit Interrupter
HACR - Heating, A/C & Refrigeration
SF - Subfeed
TC - Time Clock Control

H2M architects + engineers
538 Broad Hollow Road, 4th Floor East
Melville, NY 11747
631.756.8000 ▪ www.h2m.com

CONSULTANTS:

MARK	DATE	DESCRIPTION

"ALTERATION OF THIS DOCUMENT EXCEPT BY A LICENSED PROFESSIONAL IS ILLEGAL"

DESIGNED BY:	DRAWN BY:	CHECKED BY:	REVIEWED BY:
SMP/CMP	SMP/CMP		

PROJECT No:	DATE:	SCALE:
VGFD2001	JULY 2022	AS SHOWN

CLIENT

VAILS GATE FIRE DISTRICT

New Storage Building (Phase I)
New Fire Station (Phase II)

872 Blooming Grove Turnpike
New Windsor, NY 12553

CONTRACT
CONTRACT G
GENERAL CONSTRUCTION

STATUS
REGULATORY REVIEW

SHEET TITLE
ELECTRICAL PANEL SCHEDULES
NEW FIRE STATION
PHASE 2

DRAWING No.
E2 601.00

C:\Users\rjoshi\Documents\VGFD2001-Central21-E_rjoshi.rvt
7/15/2022 3:36:56 PM

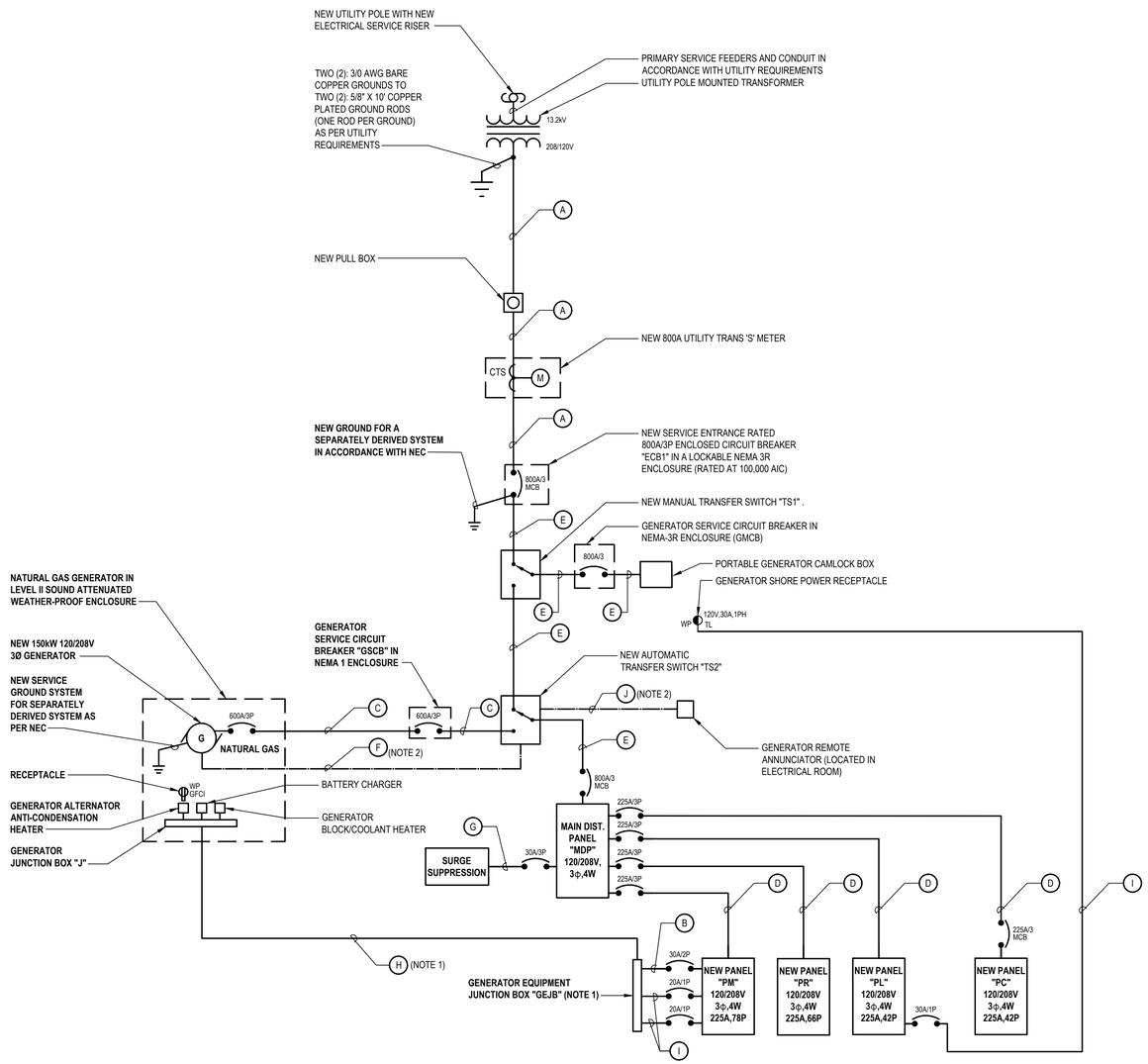

1 Electrical Single Line Diagram

SCALE:NTS

SINGLE LINE NOTES:

1. CONTRACTOR SHALL COMBINE CIRCUITS INTO ONE CONDUIT TO GENERATOR.
2. BELDEN '9729' CABLE SHALL BE ROUTED CONTINUOUS FROM GENERATOR TO GENERATOR REMOTE ANNUNCIATOR.

FEEDER SCHEDULE

FEEDER	COPPER CONDUCTOR AND CONDUITS FEEDER SCHEDULE
A	2 SETS OF 4-500 MCM IN (2) 4" E.C.
B	2 #8 AWG + #8 AWG GND IN 1" E.C.
C	2 SETS OF 4-350 MCM + #1 AWG GND IN (2) 3-1/2" E.C.
D	4 #4/0 AWG + #4 AWG GND IN 2-1/2" E.C.
E	2 SETS OF 4-500 MCM +#1/0 AWG GND IN (2) 4" E.C.
F	10 #14 AWG + BELDEN 9729 IN 1-1/4" E.C. (CONTROLS / ALARMS) (BELOW GRADE)
G	MICRO Z, LOW INDUCTANCE CABLE IN 1" E.C.
H	6 #8 AWG + 3 #8 AWG GND IN 1-1/2" E.C.
I	2 #10 AWG + #10 AWG GND IN 3/4" E.C.
J	BELDEN 9729 IN 1-1/4" E.C.

DISCONNECT SWITCH SCHEDULE

DISCONNECT SWITCH IDENTIFICATION	TYPE	ENCLOSURE	VOLTS	POLES	FRAME SIZE AMPS	FUSE RATING
DS1	UNFUSED	NEMA 3R	208V	3	60	-
DS2	UNFUSED	NEMA 3R	208V	2	30	-
DS3	UNFUSED	NEMA 1	208V	3	30	-
DS4	UNFUSED	NEMA 1	208V	3	100	-

TRANSFER SWITCH SCHEDULE

TRANSFER SWITCH IDENTIFICATION	TYPE	ENCLOSURE	VOLTS	PHASE	POLES	AMPS
TS1	MANUAL	NEMA 1	208	3Ø	4	800
TS2	AUTOMATIC	NEMA 1	208	3Ø	4	800

MOTOR STARTER SCHEDULE

IDENTIFICATION	NEMA SIZE	VOLTS / PHASE	ENCLOSURE TYPE	DISCONNECT AMPS / POLE	ACCESSORIES
S1	0	208 / 3Ø	NEMA 1	30A/3P	H-O-A SWITCH, RUN AND OVERLOAD LIGHT

H2M architects + engineers

538 Broad Hollow Road, 4th Floor East
Melville, NY 11747
631.756.8000 • www.h2m.com

CONSULTANTS:

MARK	DATE	DESCRIPTION

STATE OF NEW YORK · ANTHONY W. CIMINO · 082583 · LICENSED PROFESSIONAL ENGINEER

"ALTERATION OF THIS DOCUMENT EXCEPT BY A LICENSED PROFESSIONAL IS ILLEGAL"

DESIGNED BY:	DRAWN BY:	CHECKED BY:	REVIEWED BY:
SMP/CMP	SMP/CMP	AWK	AWK
PROJECT No.: VGFD2001	DATE: JULY 2022		SCALE: AS SHOWN

CLIENT

VAILS GATE FIRE DISTRICT

New Storage Building (Phase I)
New Fire Station (Phase II)

872 Blooming Grove Turnpike
New Windsor, NY 12553

CONTRACT

CONTRACT G
GENERAL CONSTRUCTION

STATUS

FINAL BID DOCUMENT

SHEET TITLE

ELECTRICAL SINGLE LINE DIAGRAM
NEW FIRE STATION
PHASE 2

DRAWING No.

E2 610.00

\\h2m.com\share\Projects\VGFD\Vails Gate Fire Dist\\VGFD2001-\Vails Gate FD New Firehouse\02-BIM-CADD\Con-docs\sets\Main Fire House\E-610.00 - Electrical Single Line Diagram (FA House).dwg Last Modified: Jul 13, 2022 - 1:15pm Plotted on: Jul 15, 2022 - 3:01pm By pyalacios

FIRE ALARM LEGEND

SYMBOL	DESCRIPTION	COMMENTS
FACP	FIRE ALARM CONTROL PANEL.	
RA	REMOTE ANNUNCIATOR WITH BACKBOX.	
S	SMOKE DETECTOR.	
RAL / S	ABOVE CEILING SMOKE DETECTOR WITH REMOTE ALARM LAMP.	
RAL / D / R1	DUCT DETECTOR WITH REMOTE ALARM LAMP; "S" DENOTES SUPPLY, "R" DENOTES RETURN.	
	HEAT DETECTOR.	
F	HEAT DETECTOR 200°.	
CO	CARBON MONOXIDE DETECTOR	
	HORN/STROBE COMBO.	
	SPEAKER/STROBE COMBINATION	
WP	WEATHER PROOF HORN/STORBE COMBO WITH BACKBOX.	
AM	ADAPTER MODULE WITH MOUNTING PLATE.	
SH	SMOKE HATCH (F.B.O.).	
	STROBE.	
DH	MAGNETIC DOOR HOLDER.	
F	MANUAL PULL STATION WITH BACKBOX.	
R	RELAY.	
IAM	INDIVIDUAL ADDRESSABLE MODULE.	
AES	AUTOMATIC EXTINGUISHING SYSTEM.	
	MOTOR STARTER.	
	END OF LINE RESISTOR.	
BT	BEAM DETECTOR TRANSMITTER.	
BR	BEAM DETECTOR RECEIVER.	
SP	SURGE PROTECTOR.	
	BELL/STROBE.	
ER S	SMOKE DETECTOR FOR ELEVATOR RECALL.	
SRP	SUPPRESSION RELEASING PANEL.	
MS	MAINTENANCE SWITCH.	
SOL	SOLENOID (F.B.O.).	
PS	PRESSURE SWITCH.	
TS	TAMPER SWITCH	
FS	FLOW SWITCH	
CS	COIL SUPERVISORY (F.B.O.).	
CL	AIR COMPRESSOR, LOW PRESSURE (F.B.O.).	
CH	AIR COMPRESSOR, HIGH PRESSURE (F.B.O.).	
B STAGE 2	STAGE 2 BELL.	

LIST OF DRAWINGS

FA2 001.00	FIRE ALARM LEGENDS AND RISER DIAGRAM
FA2 101A.00	PARTIAL FIRST FLOOR FIRE ALARM PLAN
FA2 101B.00	PARTIAL FIRST FLOOR FIRE ALARM PLAN
FA2 102A.00	PARTIAL SECOND/MEZZANINE FLOOR FIRE ALARM PLAN
FA2 102B.00	PARTIAL SECOND FLOOR FIRE ALARM PLAN

NOTES:

1. ALL WIRING TO BE INSTALLED ACCORDING TO THE LATEST REVISION OF THE NATIONAL ELECTRIC CODE OR AS DICTATED BY CONTRACT SPECIFICATIONS, AND THE LATEST EDITION OF N.F.P.A 72 OR AS REQUIRED BY LOCAL ORDINANCE.
2. ALL CONDUCTORS MUST BE TEST FREE OF OPENS, SHORTS AND GROUNDS.
3. GROUNDING MUST COMPLY WITH THE NATIONAL ELECTRIC CODE. GROUNDING MUST BE NO. 12 A.W.G.
4. ALL PANEL TERMINATIONS TO BE SUPERVISED BY A FACTORY AUTHORIZED TECHNICIAN PRIOR TO POWERING EQUIPMENT.
5. FOR COMPONENT WIRING AND INSTALLATION INFORMATION REFER TO MANUFACTURERS REQUIREMENTS.
6. REFER TO CONTRACT DRAWINGS FOR APPROXIMATE DEVICE LOCATIONS. DRAWINGS REPRESENT DEVICE QUANTITIES. SHOP DRAWINGS SHALL BE SUBMITTED SHOWING SCALED LOCATIONS. CONTRACTOR TO SUBMIT PLANS STAMPED BY LICENSED NEW YORK PROFESSIONAL ENGINEER ONLY. SHOP DRAWINGS WITHOUT P.E STAMP WILL BE AUTOMATICALLY REJECTED.
7. INSTALL DETECTORS A MINIMUM OF 3'-0" FROM ANY SUPPLY OR RETURN AIR REGISTERS. COORDINATE EXACT LOCATIONS OF SUPPLY/RETURNS REGISTERS WITH MECHANICAL CONTRACTOR
8. WHEN INSTALLING SHIELDED CABLE THE FOLLOWING MUST BE OBSERVED:
   A. METALLIC CONTINUITY MUST BE MAINTAINED THROUGHOUT THE CABLE RUN.
   B. THE CABLE SHIELD MUST BE ISOLATED FROM GROUND AND TERMINATED ONLY IN THE ASSOCIATED CONTROL PANEL AT THE TERMINAL INDICATED ON THE CONTROL PANEL DRAWINGS. THE REMOTE END OF THE SHIELD (AT LAST DEVICE) MUST BE TAPED AND ISOLATED FROM GROUND.
9. ALL STROBE APPLIANCES SHALL BE SYNCHRONIZED. ALL ALARM INDICATING APPLIANCES SHALL SOUND A 'TEMPORAL 3' CODE PATTERN, UNLESS SYSTEM IS VOICE ACTIVATED.
10. AFTER ALARM INDICATION, ALL FANS SHALL BE MANUALLY RESET INDEPENDENT FROM F.A.C.P. SYSTEM RESET. PROVIDE ALL REQUIRED HARDWARE ACCESSORIES, MOTOR STARTERS, CONTROLS, POWER AND CONTROL WIRING AND CONDUITS TO PROVIDE INDEPENDENT RESET OF ALL FANS AFTER ALARM INDICATION.
11. INSTALL ALL DEVICES IN ACCORDANCE WITH A.D.A REQUIREMENTS. ALL DEVICES SHALL BE MOUNTED AS FOLLOWS:
    A. MANUAL PULL STATIONS 48" O.C.
    B. ALARM INDICATING APPLIANCE 80" A.F.F.
    C. VERIFY WITH CONTRACT SPECIFICATIONS FOR ANY DEVIATIONS.
12. STROBES SHALL BE WIRED TO REMAIN ACTIVE AFTER SILENCE FUNCTION IS PERFORMED.
13. PROVIDE AND INSTALL ALL NECESSARY CONTROL MODULES, SYNCHRONIZATION MODULES AND MONITOR MODULES AS REQUIRED BY MANUFACTURER.
14. COORDINATE INSTALLATION OF WATER FLOW AND TAMPER SWITCHES WITH SPRINKLER CONTRACTOR.
15. CONTRACTOR TO INSTALL NECESSARY & REQUIRED POWER SUPPLY UNITS TO ENSURE PROPER OPERATION AT ALL MAGNETIC DOOR HOLDERS AS SHOWN ON DRAWINGS.
16. PROVIDE AND INSTALL ALL REQUIRED RELAYS TO RELEASE ELECTRIC DOOR LATCHES.
17. COORDINATE EXACT LOCATION OF REMOTE ANNUNCIATOR AND F.A.C.P. WITH LOCAL FIRE MARSHALL AND OWNER.
18. PROVIDE ALL REQUIRED DUCT SMOKE DETECTORS. CONTRACTOR TO INSTALL DUCT SMOKE DETECTORS. CONTRACTOR TO INTERFACE ALL DUCT DETECTORS WITH FACP.
19. CONTRACTOR TO INSTALL NECESSARY COMPONENTS FOR ELEVATOR RECALL AS PER LOCAL FIRE MARSHALL. EACH LOBBY, MACHINE ROOM AND PIT TO HAVE SMOKE DETECTION. WHERE APPLICABLE CONTRACTOR TO COORDINATE AND INSTALL NECESSARY COMPONENTS TO INTERFACE FIRE ALARM SYSTEM, ELEVATOR, AND SPRINKLER HEAD SOLENOID VALVES LOCATED IN THE ELEVATOR SHAFT.
20. CONTRACTOR SHALL PROVIDE TWO TELEPHONE LINES AND TELEPHONE JACKS. PROVIDE ALL REQUIRED WIRING/CONDUIT TO LOCATE NEW TELEPHONE JACKS ADJACENT TO FACP.
21. FIRE ALARM RISER DIAGRAM IS SCHEMATIC. REFER TO FLOOR PLANS FOR DEVICE TYPES AND QUANTITIES.
22. ALL HVAC EQUIPMENT WITH A CFM RATING OF 1000 CFM OR GREATER SHALL BE INTERCONNECTED TO THE FIRE ALARM SYSTEM AND SHUT DOWN UPON FIRE ALARM SYSTEM ALARM ACTIVATION. CONTRACTOR SHALL ALSO PROVIDE AND INSTALL NEW RETURN DUCT SMOKE DETECTORS WITH REMOTE LED'S FOR ALL HVAC UNITS WITH A CFM RATING OF 2000 CFM OR GREATER.
23. IN ADDITION TO DEVICES SHOWN ON THE DRAWINGS CONTRACTOR TO PROVIDE FIVE SMOKE DETECTORS, FIVE HEAT DETECTORS, FIVE PULL STATIONS, FIVE HORN STROBES, FIVE STROBES AND FIVE CARBON MONOXIDE DETECTORS. EACH DEVICE SHALL BE INCLUDED WITH 100' OF WIRING AND/OR CONDUIT.
24. PROTECTIVE SHIELDS SHALL BE PROVIDED FOR ALL PULL STATIONS. SHIELDS SHALL FIT OVER MANUAL PULL STATIONS AND SHALL INCLUDE A BATTERY OPERATED PIERCING HORN WHEN THE SHIELD IS REMOVED.
25. PLENUM WIRING TO BE USED IN ALL AREAS ABOVE DROP CEILINGS. CONDUIT MUST BE USED IN ALL MECHANICAL AND ELECTRICAL ROOMS. CONDUIT MUST ALSO BE USED IN ALL AREAS WITH OPEN CEILINGS.
26. ALL EQUIPMENT TO BE RECESSED MOUNTED AND ALL WIRING AND CONDUIT TO BE RUN CONCEALED
27. HEAT DETECTOR MOUNTED IN THE ELEVATOR SHAFT MUST BE WITHIN 2' OF THE SPRINKLER HEAD.
28. ON WATER FLOW, AND IF THE F.A.C.P WAS NOT IN ALARM, THE PRESSURE SWITCH WILL PUT THE SYSTEM IN ALARM TURNING ON AV'S, STAGE 2 BELL AND SEND SIGNALS TO CENTRAL STATION AND SHUT DOWN FANS.
29. TS (TAMPER SWITCH), CH (AIR COMPRESSOR HIGH PRESSURE), CL (AIR COMPRESSOR LOW PRESSURE), SHALL CAUSE A SUPERVISORY TROUBLE AT THE F.A.C.P AND SEND A SIGNAL TO CENTRAL STATION IF SYSTEM IS MONITORED.

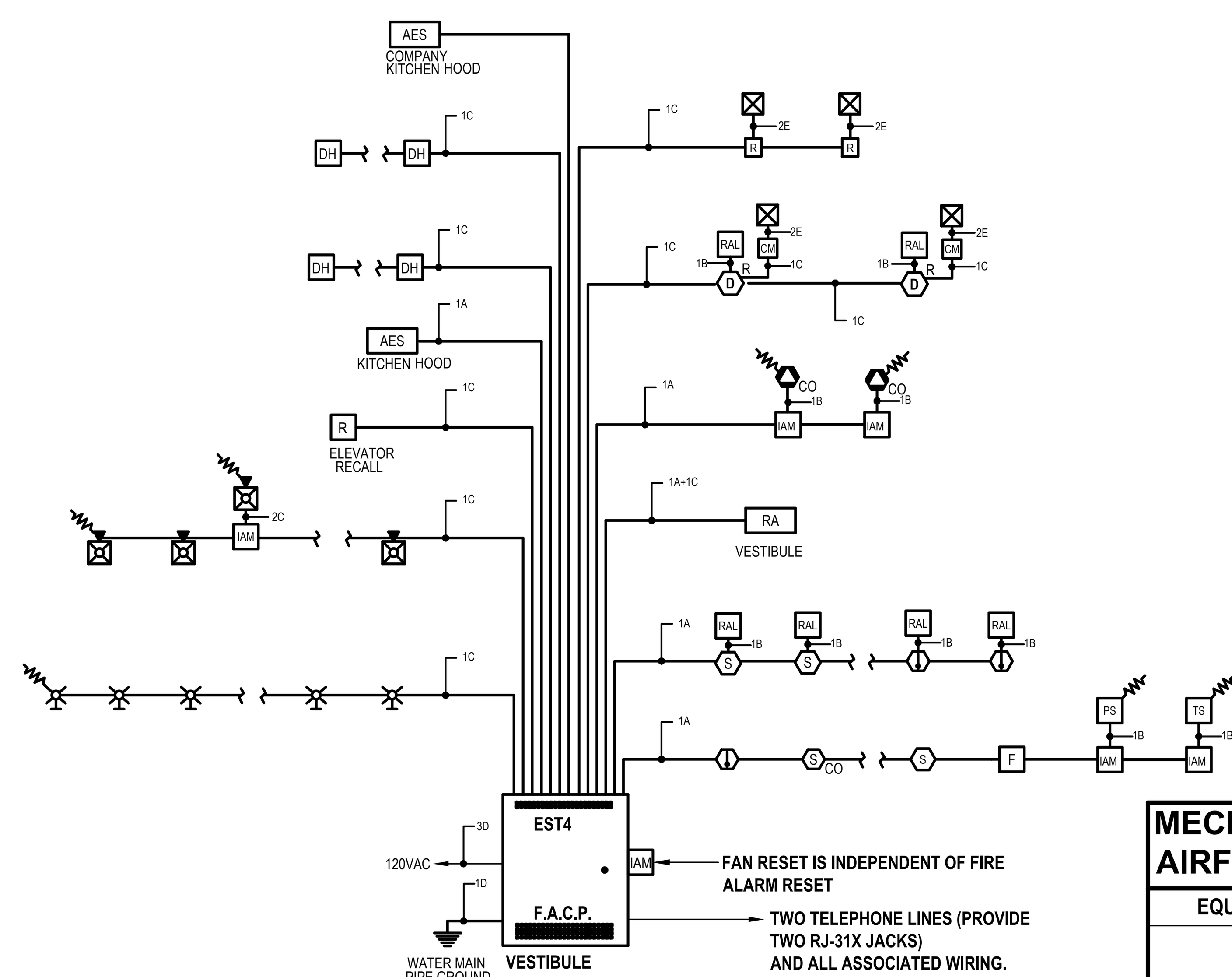

1 Fire Alarm Riser Diagram (Note 21)

SCALE: NTS

WIRE LEGEND

	WIRE DESCRIPTION	TYPE	NOTES
A	1 PAIR TWISTED SHIELDED #18 AWG	FPLP	-
B	1 PAIR #18 AWG. NON-SHIELDED	FPLP	-
C	1 PAIR #14 AWG. NON SHIELDED	FPLP	-
D	#12 AWG. NON SHIELDED	THHN	*
E	#14 AWG. NON SHIELDED	THHN	-
F	1 PAIR TWISTED SHIELDED #16 AWG.	FPLP	-

* PROVIDE ALL 120 VOLT CIRCUITS IN CONDUIT.

MECHANICAL EQUIPMENT AIRFLOW CHART (NOTE 22)

EQUIPMENT NAME	AIRFLOW (CFM)
CU-1,2	11300
DOAS-1	4500
GX-1	4250
UH-1,2,3,4	3240
LRS-1	1250
RTU-208	1200
OU-1	1165
TX-1	700
IU-1	400
EU-114,203,212,213,214,215,216	265
EU-120,211	283
EU-125A	307
EU-118,202	396

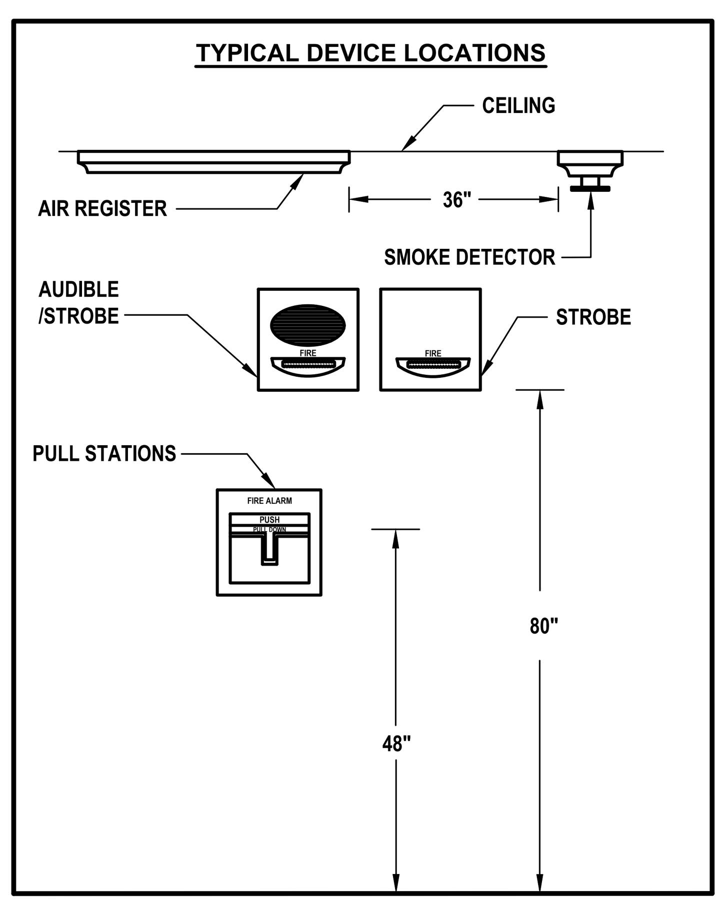

2 Typical Fire Alarm Device Location

SCALE: NTS

	CONTROL UNIT ANNUNCIATION						NOTIFICATION				SUPPLEMENTARY			
	ACTUATE COMMON ALARM SIGNAL INDICATOR	ACTUATE VISUAL ALARM SIGNAL	ACTUATE COMMON SUPERVISORY SIGNAL INDICATOR	ACTUATE COMMON TROUBLE SIGNAL	ACTUATE ZONE INDICATION	ACTUATE FULL BUILDING EVACUATION SIGNAL	DISPLAY CHANGE OF STATUS	TRANSMIT FIRE ALARM SIGNAL TO SUPERVISING STATION	TRANSMIT SUPERVISION SIGNAL TO SUPERVISING STATION	TRANSMIT TROUBLE SIGNAL TO SUPERVISING STATION		HVAC FAN SHUTDOWN	INITIATE EXTERIOR STROBE	
MANUAL PULL STATION	●	●			●	●	●	●				●	●	
SMOKE DETECTOR	●	●			●	●	●	●				●	●	
HEAT DETECTOR	●	●			●	●	●	●				●	●	
DUCT DETECTOR	●	●			●	●	●	●				●	●	
CARBON MONOXIDE DETECTOR					●		●		●					
FIRE PANEL AC POWER FAILURE			●						●					
FA SYSTEM LOW BATTERY				●						●				
OPEN CIRCUIT				●						●				
GROUND FAULT				●						●				
NOTIFICATION APPLIANCE CIRCUIT SHORT				●						●				

3 Fire Alarm Sequence of Operation

SCALE: NOT TO SCALE

H2M architects + engineers

538 Broad Hollow Road, 4th Floor East
Melville, NY 11747
631.756.8000 ▪ www.h2m.com

CONSULTANTS:

MARK	DATE	DESCRIPTION

STATE OF NEW YORK · ANTHONY WOONGJIN KIM · 092583 · LICENSED PROFESSIONAL ENGINEER

"ALTERATION OF THIS DOCUMENT EXCEPT BY A LICENSED PROFESSIONAL IS ILLEGAL"

DESIGNED BY:	DRAWN BY:	CHECKED BY:	REVIEWED BY:
SMP/CMP	SMP/CMP	AWK	AWK

PROJECT No.:	DATE:	SCALE:
VGFD2001	JULY 2022	AS SHOWN

CLIENT

VAILS GATE FIRE DISTRICT

New Storage Building (Phase I)
New Fire Station (Phase II)

872 Blooming Grove Turnpike
New Windsor, NY 12553

CONTRACT

CONTRACT G
GENERAL CONSTRUCTION

STATUS

FINAL BID DOCUMENT

SHEET TITLE

FIRE ALARM LEGENDS AND RISER DIAGRAM PHASE 2

DRAWING No.

FA2 001.00

\\h2m.com\shares\Projects\VGFD (Vails Gate Fire Dept)\VGFD2001-(Vails Gate FD-New Firehouse)\02-BIM-CADD\Con-docs\elec\Main Fire House\FA2-001.00 - Fire Alarm Legends and Riser Diagram (FA House).dwg Last Modified: Jul 14, 2022 - 5:04pm Plotted on: Jul 15, 2022 - 3:01pm By ppalacios

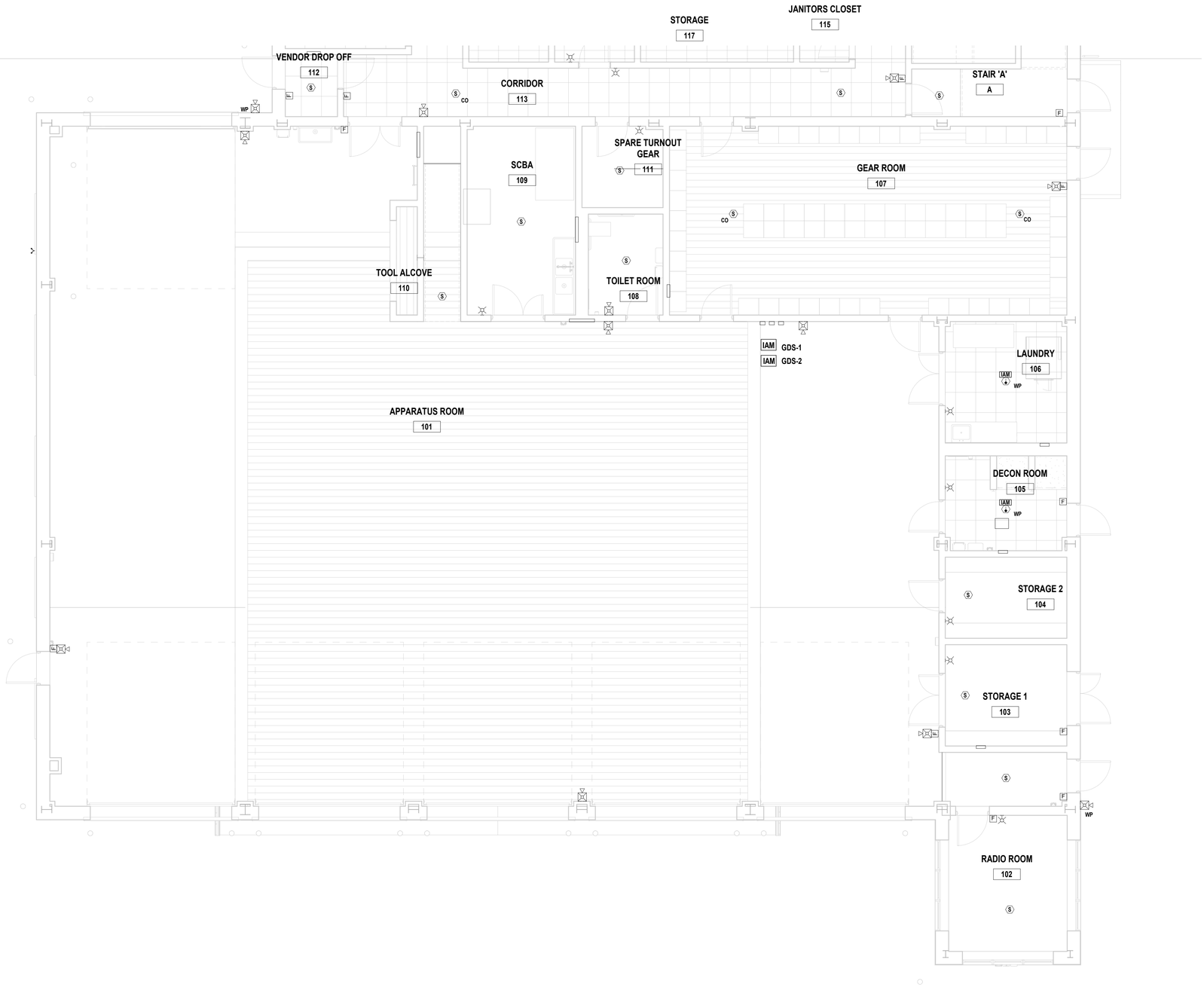

1 Partial First Floor Fire Alarm Plan
SCALE: 3/16" = 1'-0"

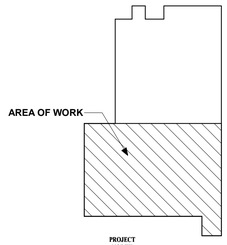

Key Plan

PROJECT NORTH

H2M architects + engineers

538 Broad Hollow Road, 4th Floor East
Melville, NY 11747
631.756.8000 • www.h2m.com

CONSULTANTS:

MARK	DATE	DESCRIPTION

STATE OF NEW YORK
ANTHONY WOONG-IN WAN
LICENSED PROFESSIONAL ENGINEER
092583

"ALTERATION OF THIS DOCUMENT EXCEPT BY A LICENSED PROFESSIONAL IS ILLEGAL"

DESIGNED BY:	DRAWN BY:	CHECKED BY:	REVIEWED BY:
SMP/CMP	SMP/CMP		

PROJECT No:	DATE:	SCALE:
VGFD2001	JULY 2022	AS SHOWN

CLIENT
VAILS GATE FIRE DISTRICT

New Storage Building (Phase I)
New Fire Station (Phase II)

872 Blooming Grove Turnpike
New Windsor, NY 12553

CONTRACT
CONTRACT G
GENERAL CONSTRUCTION

STATUS
REGULATORY REVIEW

SHEET TITLE
PARTIAL FIRST FLOOR FIRE ALARM PLAN
NEW FIRE STATION
PHASE 2

DRAWING No.
FA2 101A.00

C:\Users\jjoshi\Documents\VGFD2001-Central21-E_rjoshi.rvt
7/15/2022 3:37:01 PM

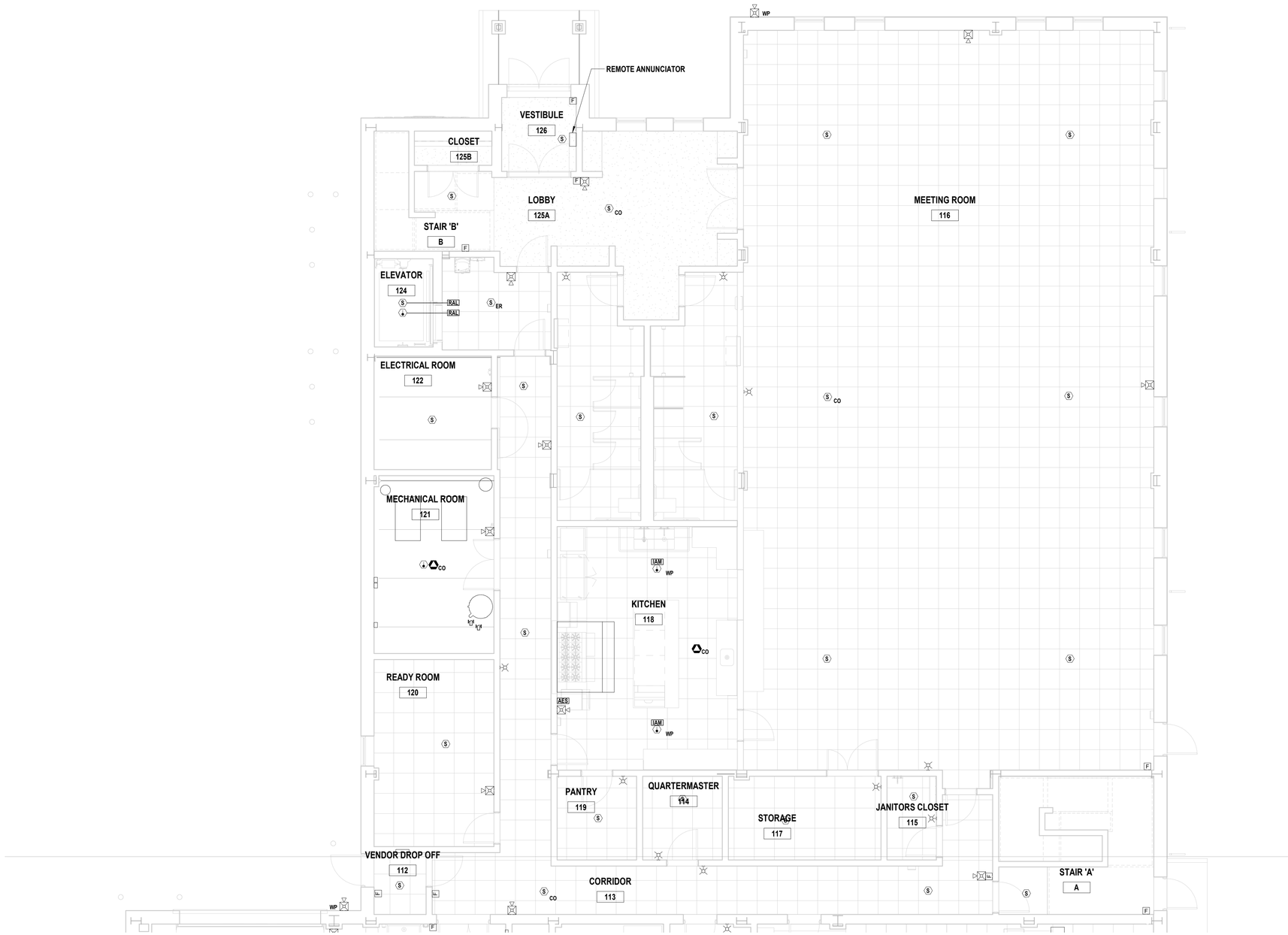

1 Partial First Floor Fire Alarm Plan

SCALE: 3/16" = 1'-0"

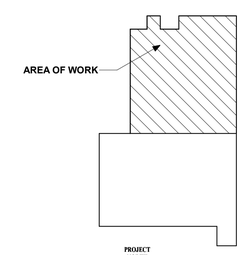

Key Plan

PROJECT NORTH

H2M architects + engineers

538 Broad Hollow Road, 4th Floor East
Melville, NY 11747
631.756.8000 • www.h2m.com

CONSULTANTS:

MARK	DATE	DESCRIPTION

STATE OF NEW YORK · ANTHONY MICHAEL PIPPIA · 082583 · LICENSED PROFESSIONAL ENGINEER

*ALTERATION OF THIS DOCUMENT EXCEPT BY A LICENSED PROFESSIONAL IS ILLEGAL.

DESIGNED BY:	DRAWN BY:	CHECKED BY:	REVIEWED BY:
SMP/CMP	SMP/CMP		

PROJECT No:	DATE:	SCALE:
VGFD2001	JULY 2022	AS SHOWN

CLIENT

VAILS GATE FIRE DISTRICT

New Storage Building (Phase I)
New Fire Station (Phase II)

872 Blooming Grove Turnpike
New Windsor, NY 12553

CONTRACT

CONTRACT G
GENERAL CONSTRUCTION

STATUS

REGULATORY REVIEW

SHEET TITLE

PARTIAL FIRST FLOOR FIRE ALARM PLAN
NEW FIRE STATION
PHASE 2

DRAWING No.

FA2 101B.00

C:\Users\jpahl\Documents\VGFD2001-Central21-E_jpahl.rvt

7/15/2022 3:37:03 PM

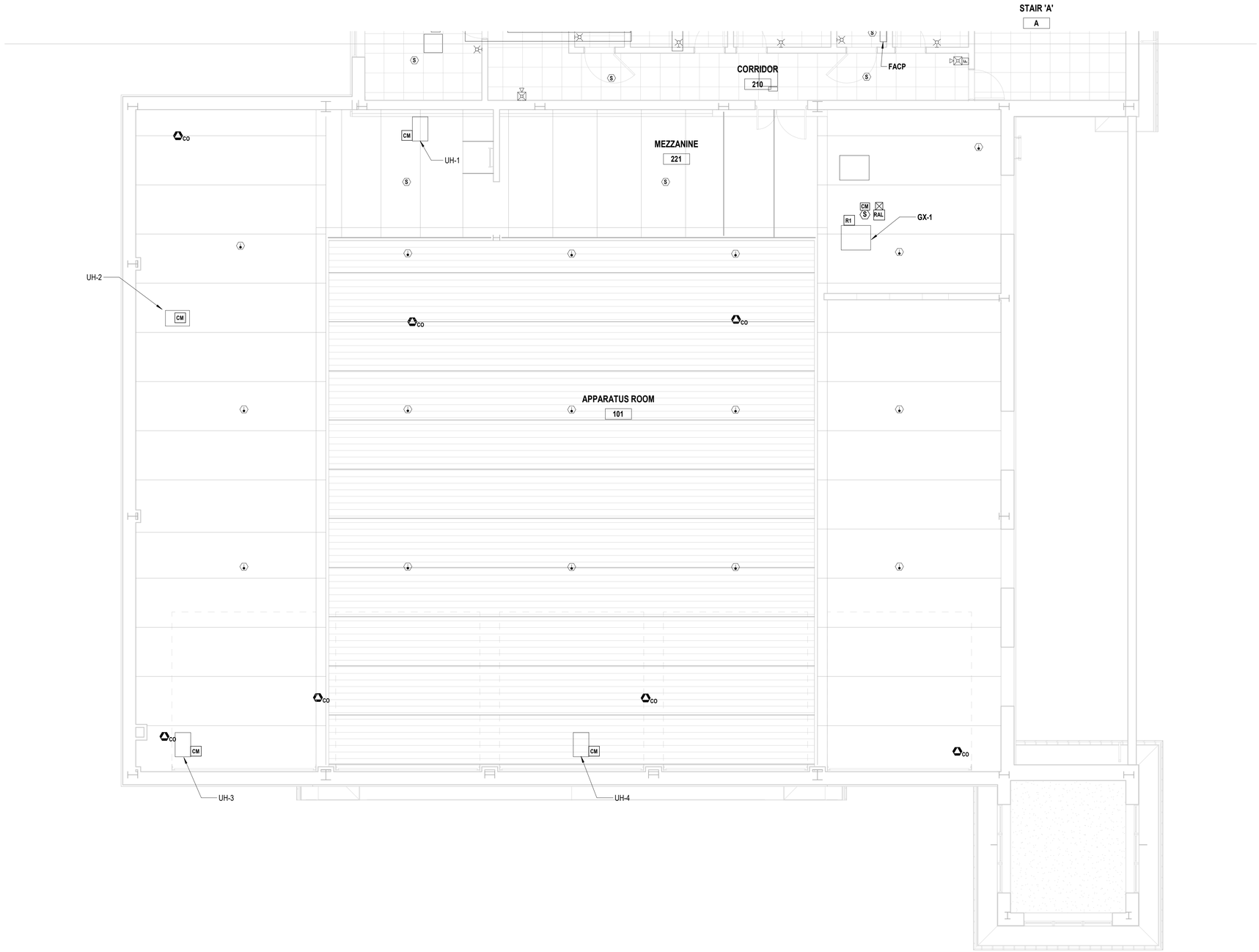

1 **Partial Second / Mezzanine Floor Fire Alarm Plan**
SCALE: 3/16" = 1'-0"

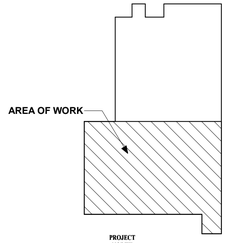

Key Plan

PROJECT NORTH

H2M architects + engineers

538 Broad Hollow Road, 4th Floor East
Melville, NY 11747
631.756.8000 • www.h2m.com

CONSULTANTS:

MARK	DATE	DESCRIPTION

STATE OF NEW YORK
ANTHONY WOONG-UN WAN
LICENSED PROFESSIONAL ENGINEER
092583

"ALTERATION OF THIS DOCUMENT EXCEPT BY A LICENSED PROFESSIONAL IS ILLEGAL."

DESIGNED BY:	DRAWN BY:	CHECKED BY:	REVIEWED BY:
SMP/CMP	SMP/CMP		

PROJECT No:	DATE:	SCALE:
VGFD2001	JULY 2022	AS SHOWN

CLIENT
VAILS GATE FIRE DISTRICT

New Storage Building (Phase I)
New Fire Station (Phase II)

872 Blooming Grove Turnpike
New Windsor, NY 12553

CONTRACT
CONTRACT G
GENERAL CONSTRUCTION

STATUS
REGULATORY REVIEW

SHEET TITLE
PARTIAL SECOND / MEZZANINE FLOOR FIRE ALARM PLAN
NEW FIRE STATION
PHASE 2

DRAWING No.
FA2 102A.00

C:\Users\jjoshi\Documents\VGFD2001-Central21-E_jjoshi.rvt
7/15/2022 3:37:03 PM

1 Partial Second Floor Fire Alarm Plan
SCALE: 3/16" = 1'-0"

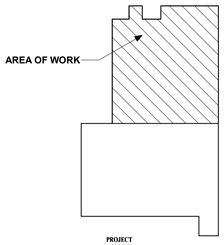

Key Plan

H2M architects + engineers

538 Broad Hollow Road, 4th Floor East
Melville, NY 11747
631.756.8000 • www.h2m.com

CONSULTANTS:

MARK	DATE	DESCRIPTION

STATE OF NEW YORK
ANTHONY WOONG-WAN
LICENSED PROFESSIONAL ENGINEER
092583

"ALTERATION OF THIS DOCUMENT EXCEPT BY A LICENSED PROFESSIONAL IS ILLEGAL."

DESIGNED BY:	DRAWN BY:	CHECKED BY:	REVIEWED BY:
SMP/CMP	SMP/CMP		

PROJECT No:	DATE:	SCALE:
VGFD2001	JULY 2022	AS SHOWN

CLIENT
VAILS GATE FIRE DISTRICT

New Storage Building (Phase I)
New Fire Station (Phase II)

872 Blooming Grove Turnpike
New Windsor, NY 12553

CONTRACT
CONTRACT G
GENERAL CONSTRUCTION

STATUS
REGULATORY REVIEW

SHEET TITLE
PARTIAL SECOND FLOOR FIRE ALARM PLAN
NEW FIRE STATION
PHASE 2

DRAWING No.
FA2 102B.00

C:\Users\joshi\Documents\VGFD2001-Central21-E_joshi.rvt
7/15/2022 3:37:05 PM

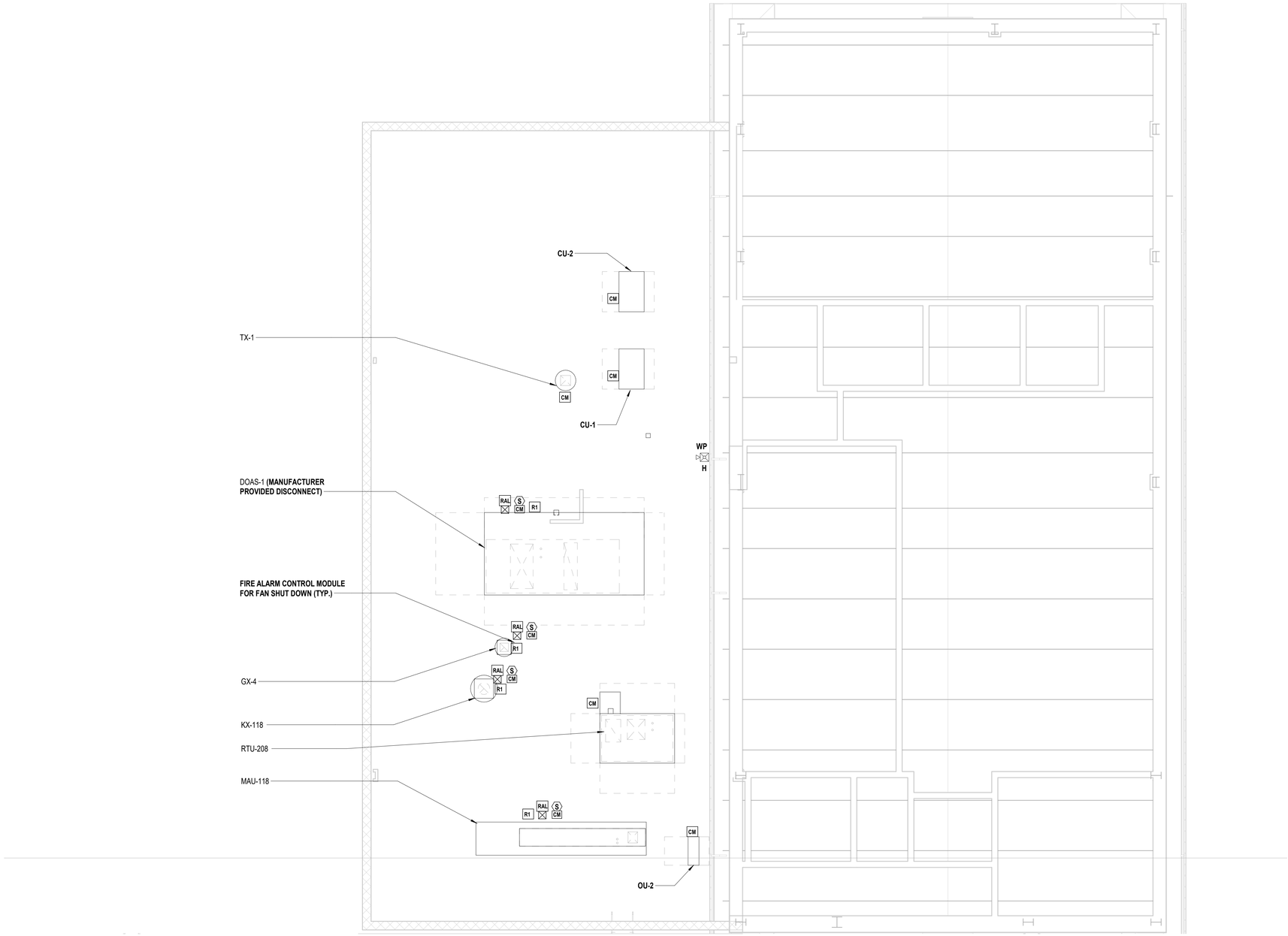

1 **Roof Fire Alarm Plan**
SCALE: 3/16" = 1'-0"

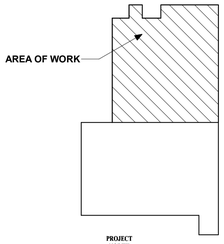

Key Plan
PROJECT NORTH

C:\Users\jposhi\Documents\VGFD2001-Central21-E_jposhi.rvt

7/15/2022 3:37:06 PM

H2M architects + engineers

538 Broad Hollow Road, 4th Floor East
Melville, NY 11747
631.756.8000 • www.h2m.com

CONSULTANTS:

MARK	DATE	DESCRIPTION

"ALTERATION OF THIS DOCUMENT EXCEPT BY A LICENSED PROFESSIONAL IS ILLEGAL."

DESIGNED BY:	DRAWN BY:	CHECKED BY:	REVIEWED BY:
SMP/CMP	SMP/CMP		

PROJECT No:	DATE:	SCALE:
VGFD2001	JULY 2022	AS SHOWN

CLIENT

VAILS GATE FIRE DISTRICT

New Storage Building (Phase I)
New Fire Station (Phase II)

872 Blooming Grove Turnpike
New Windsor, NY 12553

CONTRACT

CONTRACT G
GENERAL CONSTRUCTION

STATUS

REGULATORY REVIEW

SHEET TITLE

ROOF FIRE ALARM PLAN
NEW FIRE STATION
PHASE 2

DRAWING No.

FA2 130.00